Bonfiglioli
Riduttori

300 Industrial series

Modular planetary gearboxes

Power Series

Ex Included

Bonfiglioli
Forever Forward

Chapter	Description	Page
GENERAL INFORMATION		**2**
1	Symbols and units of measure	2
2	Introduction	4
3	Specifications	4
4	Versions	6
5	Output torque	8
6	Power	9
7	Efficiency	10
8	Reduction ratio	10
9	Angular speed	10
10	Service factor	10
11	Service factor requested by application	11
12	Life factor	11
13	Product selection	13
14	Installation	25
15	Maintenance	27
16	Storage	27
17	Supply conditions	27
SERIES 300 MODULAR PLANETARY GEARBOXES		**28**
18	300 Gearbox designation	28
19	3/V Gearbox designation	30
20	3/A Gearbox designation	32
21	Motor designation	34
22	Surface protection and painting options	35
23	Mounting position	36
24	Lubrication	39
25	Rating charts	41
26	Dimensions	244
CUSTOMER'S SHAFT		**454**
TORQUE ARM		**457**
TORQUE ARM KIT FOR FP VERSIONS		**457**

Chapter	Description	Page
NEGATIVE MULTIDISC BRAKE AND HYDRAULIC MOTORS		**458**
H1	Symbols and units of measure	458
H2	Negative multidisc brake	458
H3	Inputs for hydraulic motors	459
H4	Hydraulic motors	469
H5	Technical features	469
H6	Designation	470
H7	Displacement selection	471
H8	Checking	471
H9	Technical data mg motors	472
H10	Dimensions mg motors	474
H11	Technical databrakes for mg motors	475
H12	Installation	475
PLANETARY GEARBOX SERIES 300 ATEX CONFIGURATION		**478**
A1	Scope of document	478
A2	Introduction to the atex directives	478
A3	Use, installation and maintenance	480
A4	Peculiarities of 300 series gear units compliant with directive Atex	480
A5	Ordering numbers	488
A6	Declaration of conformity	492
ELECTRIC MOTORS		**494**
M1	Symbols and units of measurement	494
M2	General characteristics	495
M3	Mechanical features	498
M4	Electrical characteristics	502
M5	Asynchronous brake motors	509
M6	DC brake motors type BN and M_FD	510
M7	DC brake motors type BN and M_AFD	514
M8	AC brake motors type BN and M_FA	518
M9	Brake release systems	521
M10	Options	523
M11	Motor rating charts	536
M12	Motors dimensions	553

Revisions

Refer to page 562 for the catalogue revision index. Visit www.bonfiglioli.com to search for catalogues with up-to-date revisions.

1 SYMBOLS AND UNITS OF MEASURE

Symbols	Units of Measure	Description
$A_{c\ 1,2}$	[N]	Calculated thrust load
$A_{n\ 1,2}$	[N]	Rated thrust load
A_{r2}	[N]	Thrust load at gearbox output shaft
F_h	–	Lifetime factor for gearbox calculation
$F_{h\ 1,2}$	–	Lifetime factor for bearing calculation
$f_{n\ 1,2}$	–	Speed factor referred to input and output shaft loading
f_L	–	Lifetime factor
f_m	–	Increase factor
$f_{h\ 1,2}$	–	Load corrective factor on shafts
f_S	–	Service factor
f_S'	–	Service factor required by the application
f_t	–	Thermal factor
f_v	–	Speed factor
h	[h]	Lifetime in hours
i	–	Reduction ratio
K_a	–	Axial load duty factor
K_r	–	Radial load factor
l	–	Intermittence factor
M_2	[Nm]	Torque delivered to output shaft
M_{c2}	[Nm]	Calculated torque at gearbox output
M_{2REF}	[Nm]	Reference torque
M_{n2}	[Nm]	Gearbox rated output torque
M_{2max}	[Nm]	Gearbox max. output torque
Mb	[Nm]	Rated brake torque
$M_{r\ 1,2}$	[Nm]	Required torque at gearbox

Symbols	Units of Measure	Description
$n_{1,2}$	[min^{-1}]	Angular speed
p	[bar]	Hydraulic oil pressure
P_1	[kW]	Max transmissible power at gearbox input
P_1'	[kW]	Transmitted power at gearbox input
P_2	[kW]	Transmitted power at gearbox output
P_n	[kW]	Motor rated power
P_{r1}	[kW]	Required input power
P_{r2}	[kW]	Output power at n_2 max
P_{r2}'	[kW]	Output power at n_2 min
P_S	[kW]	Excess power
P_t	[kW]	Gearbox thermal capacity
Q	[l/min]	Hydraulic flow rate
$R_{c\ 1,2}$	[N]	Calculated radial load
$R_{n1\ 1,2}$	[N]	Rated radial load at shaft mid-point
$R_{x\ 1,2}$	[N]	Rated radial load at gearbox re-calculated with respect to different load application points
t_a	[°C]	Ambient temperature
V	[cm^3]	Hydraulic motor displacement
V_c	[cm^3]	(Theoretical) Hydraulic motor displacement
X	[mm]	Load application distance from shaft shoulder
η_d	–	Dynamic efficiency
Z	–	Frequency of starts

$_1$ value applies to input shaft

$_2$ value applies to output shaft

	Symbol referring to weight of gearboxes.
	Columns marked with this symbol indicate the reference page showing dimensions.
	This symbol identifies reference page number.
	DANGER - WARNING This symbol indicates situations of danger, which if ignored, may result in serious injury to the operator.
	IMPORTANT This symbol indicates important technical information.
	Apply to equipment complying with “ATEX” Directive
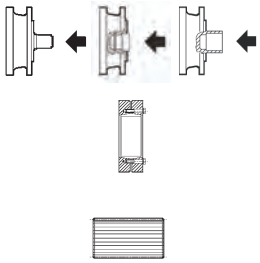	These symbols identify the mounting positions of accessories.
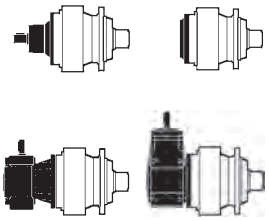	These symbols identify the position of gearbox input (black-filled areas).

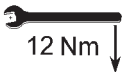	The number associated with the wrench symbol indicates the tightening torque for friction coupling screws.
	Negative multidisc brake.
	Hydraulic motor connection.
	Cover for standard input flanging.
	Inline units.
	Right angle units.
	Worm-planetary combined design.
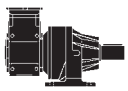	Bevel helical-planetary combined design.

2 INTRODUCTION

This catalogue presents BONFIGLIOLI RIDUTTORI's range of Series 300 modular planetary gearboxes.
The range has been expanded and integrated with new sizes, technical improvements and enhanced modularity right through to the larger sizes. This feature signifies greater flexibility in internal production to ensure quick availability of products in the sizes and types requested either directly from the company or from the many affiliates belonging to the BONFIGLIOLI sales network in various countries around the world.

The gearboxes are tested in conformity with the following standards:

ISO 6336 : 2006 - method B for gears
ISO 281 for bearings
DIN 743 : 2012 for shafts

3 SPECIFICATIONS

The 300 series consist of a range of multi-purpose planetary gearboxes that can be operated by either hydraulic or electric motors. Basic features are:

- 20 frame sizes of modular design
- output torque up to 1,286,700 Nm
- transmissible power up to 1050 kW
- ratios from 3.4:1 to 5234:1
- versions:
  - in-line with 1 to 4 reductions
  - right angle (spiral bevel gear set into first stage) with 2 to 4 reductions
- combinations with:
  - worm gear units
  - bevel-helical gear units
- flange, foot and shaft mounting arrangements
- slow output shafts: keyed, splined male, splined hollow, shrink disk mounted
- input adaptors for:
  - IEC-normalised electric motors
  - integral motor for in-line units up to size 307 and for units combined with bevel helical and worm gears
  - hydraulic motors by major manufacturers and according to SAE J744C
- parallel input shafts
- gearmotors with:
  - electric motors IEC
  - hydraulic orbital motors by BONFIGLIOLI TRASMITAL MG

• negative hydraulic parking brakes for operation by hydraulic motors

• output shaft accessories:
- flanges
- pinions
- splined bars
- shrink discs

More design features:

• high ratio of transmissible torque to overall dimensions

• high overhung and axial load capacity due to heavy duty tapered roller bearings featured on H and P versions

• high efficiency

• inner parts are coupled through splined connections rather than keys

• planetary gears mounted onto self-centering carriers to ensure the most even load distribution among planetary gears

• housing made of spheroidal cast iron.

Configurations

(A 1)

Configuration	Power	Torque	Ratios	Efficiency	Noise level
	$0.25 \le P_n$ [kW] ≤ 55	$M_{2REF} \le 1286700$ Nm	$3.4 \le i \le 2916$	High	Medium
	$0.25 \le P_n$ [kW] ≤ 55	$M_{2REF} \le 656000$ Nm	$7 \le i \le 953$	High	Medium
	$0.12 \le P_n$ [kW] ≤ 22	$M_{2REF} \le 656000$ Nm	$370 \le i \le 5234$	Medium	Low
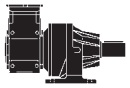	$0.12 \le P_n$ [kW] ≤ 22	$M_{2REF} \le 15680$ Nm	$18.7 \le i \le 731$	High	Low

4 VERSIONS

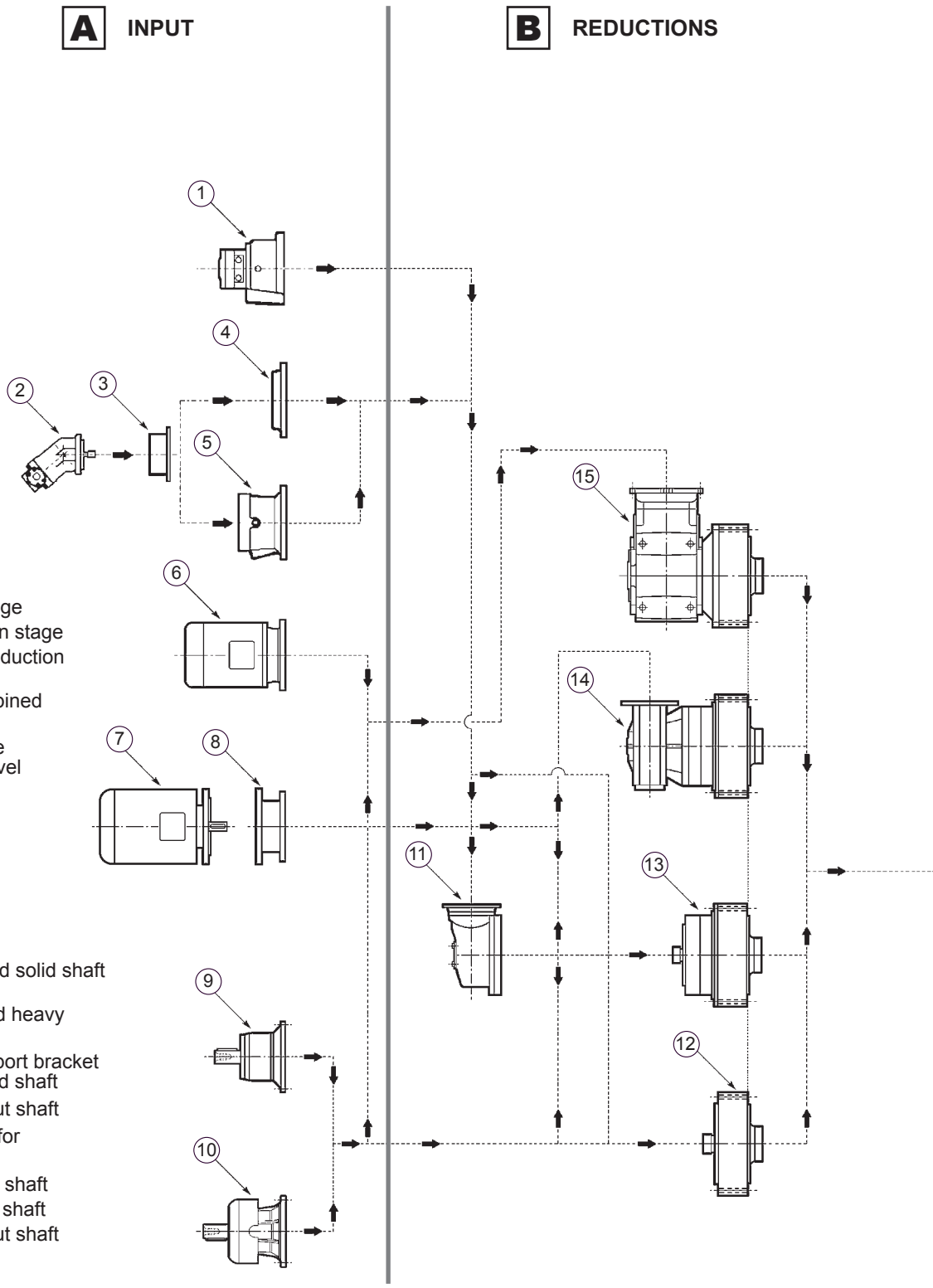

A

1 Orbital hydraulic motor MG with/without brake
2 Hydraulic motor
3 Hydraulic motor setting
4 Cover
5 Negative brake
6 Compact electric motor
7 IEC electric motor
8 Electric motor setting
9 Input shaft
10 Solid input shaft with fan

B

11 Right-angle reduction stage
12 Single planetary reduction stage
13 Two or more planetary reduction stages
14 Planetary reduction combined with wormgear unit
15 Planetary reduction stage combined with helical bevel gear unit

C

16 **MC/MZ** - Keyed or splined solid shaft output
17 **HC/HZ** - Keyed or splined heavy duty solid output shaft
18 **PC/PZ** - Output with support bracket and keyed or splined solid shaft
19 **FZ** - Splined hollow output shaft
20 **FP** - Hollow output shaft for shrink disc
21 **HC** - Parallel solid output shaft
22 **HZ** - Splined solid output shaft
23 **FZ** - Splined hollow output shaft
24 **FP** - Hollow output shaft for shrink disc
25 **PC** - Foot mount
26 **VK** - Reinforced output with parallel shaft for stirrers and mixers
27 **FDK** - Hollow shaft with double keyway
28 **FZP** - Hollow splined shaft with axial blockage device

D

29 **W0A** - Flange
30 **P_** - Pinion
31 **M0A** - Sleeve coupling
32 End plate
33 **B0A** - Splined bar
34 **G0A** - Shrink disc

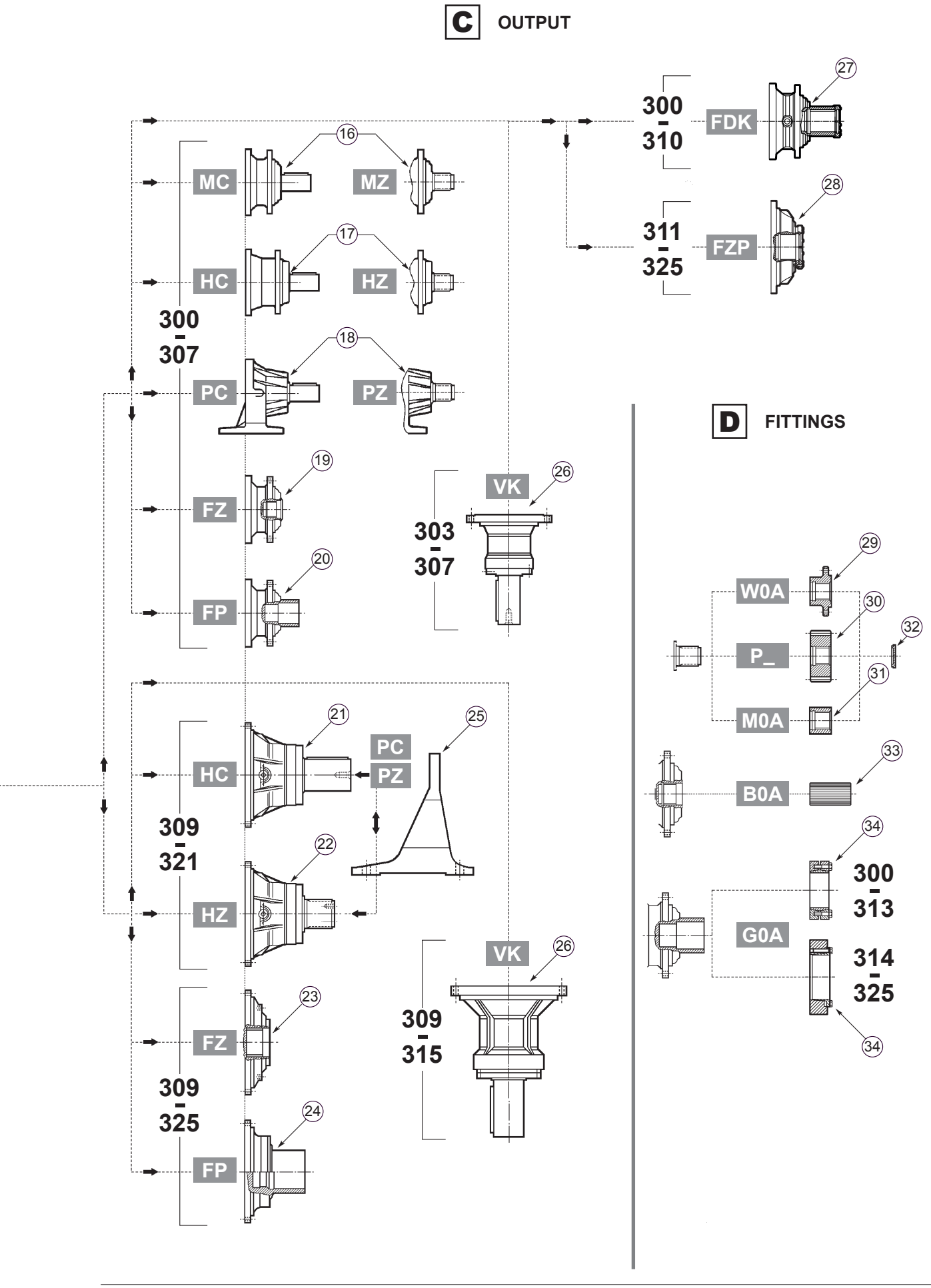
C OUTPUT
D FITTINGS
MC
MZ
HC
HZ
PC
PZ
FZ
FP
VK
FDK
FZP
W0A
P_
M0A
B0A
G0A
300 – 307
303 – 307
309 – 321
309 – 325
309 – 315
300 – 310
311 – 325
300 – 313
314 – 325
16
17
18
19
20
21
22
23
24
25
26
27
28
29
30
31
32
33
34

The following paragraphs contain information on essential elements for selection and correct use of gearmotors.

5 OUTPUT TORQUE

(A 2)

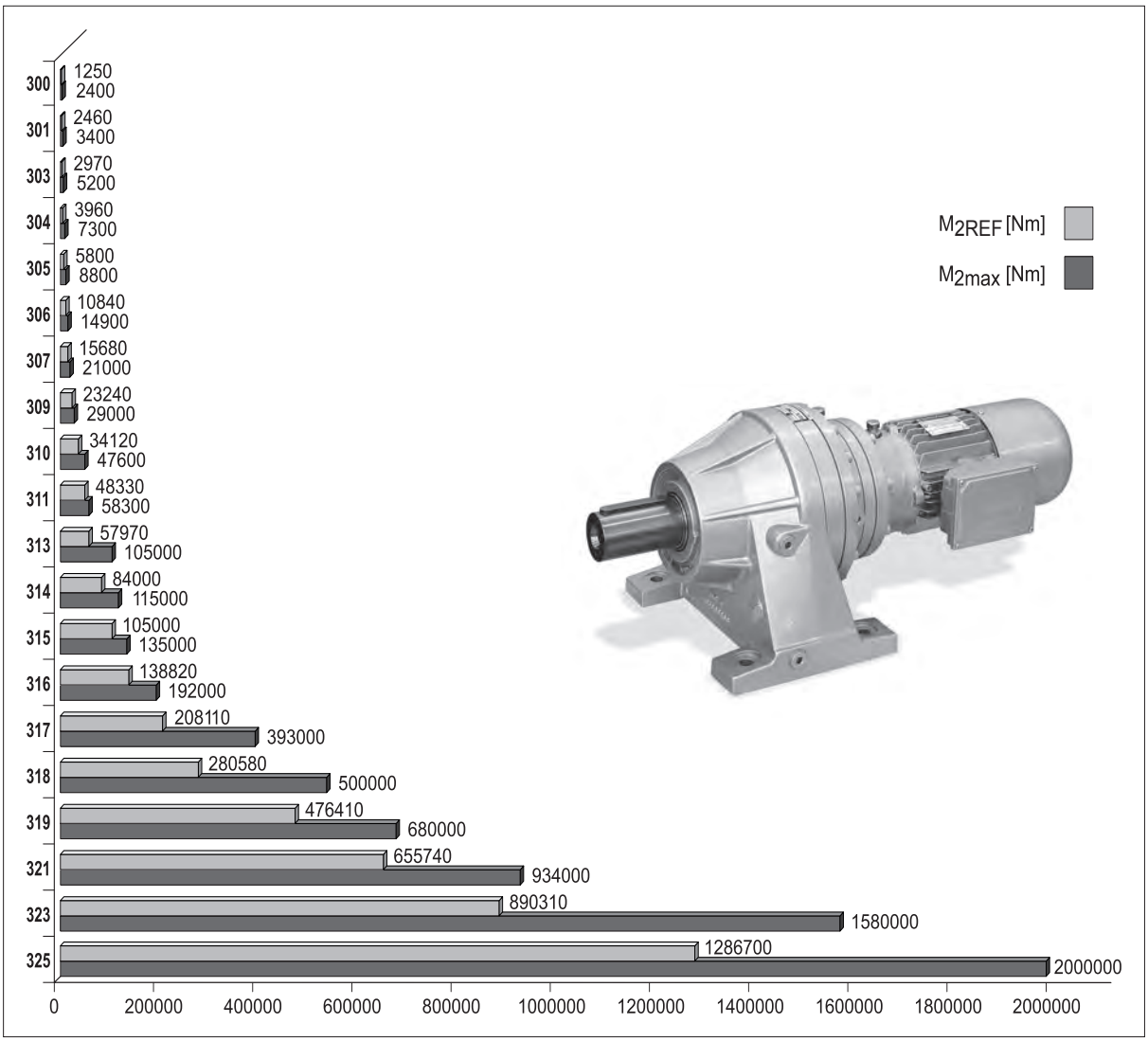

5.1 Reference torque M_{2REF} [Nm]

It is the significant value for the size. It is equivalent to the maximum value of nominal torque M_{n2} for a life factor n_2 x h = 10000 (referred to single stage configuration L1).

5.2 Rated output torque M_{n2} [Nm]

It is the output torque which the gearbox can transmit with steady load under working condition specified in the calculation method.

5.3 Maximun torque M_{2max} [Nm]

It is the output torque that the gearbox can withstand under static or almost static conditions. It is generally meant as a momentary peak load or starting-up torque under load.
The values in the tables are valid only in versions with output splined shaft (accessories excluded).

5.4 Required torque M_{r2} [Nm]

The torque drawn by the application. It must always be equal to or less than rated output torque M_{n2} for the gearbox under study.

6 POWER

6.1 Input rated power P_{n1} [kW]

P_{n1} is the maximum power that can be safely applied to the gearbox when the same is operated:
- at a n_1 drive speed
- yielding a theoretical lifetime of 10000 hours
- service factor f_s=1

Check that the formula here below is always satisfied:

$$P_1' \times fs \leq P_1 \quad (1)$$

6.2 Output power P_2 [kW]

This value is the net power delivered to the output shaft.
It can be calculated through the following formulas:

Efficiency values are listed in table (A3).

$$P2 = P1 \times \eta d \quad (2)$$

$$P_2 = \frac{M_{r2} \times n_2}{9550} \quad (3)$$

6.3 Thermal power P_t [kW]

This parameter is linked to the gearbox thermal limit. Values for the thermal capacity are listed within the rating charts of gearboxes and gearmotors and represent the mechanical power that can be transmitted continuously at an input speed n_1 and at an ambient temperature of 20°C, without the lubricant exceeding the temperature of 85-90°C and the gear case the temperature of 75-80°C, without the use a supplementary cooling system.

7 EFFICIENCY

7.1 Dynamic efficiency η_d

The parameter is defined as the relationship of the net power delivered to the output shaft P_2 to the power applied to the input shaft P_1:

$$\eta_d = \frac{P_2}{P_1} \quad (4)$$

Indicative values for the efficiency are listed in the chart here after.

(A 3)

No. of reductions	Configuration		
	Planetary	Combined with worm gear unit	Combined with right-angle unit
1	0.97	—	—
2	0.94	0.73	—
3	0.91	0.70	0.91
4	0.88	—	—

8 REDUCTION RATIO i

It is defined as the relationship of the speed the input shaft is driven at and the speed delivered at the output shaft of a gearbox.

$$i = \frac{n_1}{n_2} \quad (5)$$

9 ANGULAR SPEED

9.1 Input speed n_1 [min $^{-1}$]

The speed the gearbox is driven at.
The value is coincident with the motor speed if this is directly connected to the gearbox.
Input speed should never exceed the n_{1max} value listed in the gearbox rating chart.

9,2 Output speed n_2 [min^{-1}]

It is calculated from drive speed $\mathbf{n_1}$ and gear ratio **i**, as per the following equation:

$$n_2 = \frac{n_1}{i} \quad (6)$$

10 SERVICE FACTOR f_S

This is the relationship of the gear unit rated power to the power of the electric motor actually driving the unit.

$$f_S = \frac{P_{n1}}{P_1} \quad (7)$$

11 SERVICE FACTOR REQUESTED BY APPLICATION f_S'

It's a coefficient that represents the severity of the application. This factor takes into account, although approximately, the type of load the gearbox operates with, the specific duty cycle as well as the operating daily hours.
The table (A4) is of reference when determining the appropriate service factor for the application.

(A 4)

Service factor f_S' required depending on the application						
Type of load	Number of starts/hour z	Total operating hours (h)				
		≤ 5000	10000	15000	25000	50000
		Daily operating hours (h)				
		h < 4	4 < h < 8	8 < h < 12	12 < h < 16	16 < h < 24
Uniform load	Z < 10	0.90	1.00	1.15	1.30	1.60
	10 < Z < 30	0.95	1.15	1.30	1.50	1.80
	30 < Z < 100	1.00	1.25	1.45	1.60	2.00
Moderate shock load	Z < 10	1.00	1.25	1.45	1.60	2.00
	10 < Z < 30	1.10	1.40	1.60	1.80	2.20
	30 < Z < 100	1.20	1.50	1.70	2.00	2.40
Heavy shock load	Z < 10	1.20	1.50	1.70	2.00	2.40
	10 < Z < 30	1.30	1.60	1.80	2.10	2.60
	30 < Z < 100	1.40	1.75	2.00	2.30	2.80

12 LIFE FACTOR F_{h1}, F_{h2}

Factor resulting by multiplying angular speed at input (n_1) or output (n_2) by actual operating working hours h, break times excluded.

$$F_{h1} = (n_1 \times h) \quad (8)$$

$$F_{h2} = (n_2 \times h) \quad (9)$$

Life factor is directly proportional to gearbox rpms during the whole duty time

13 PRODUCT SELECTION

Bonfiglioli power, control and green solutions	TECHNICAL DATA REQUIRED FOR THE SELECTION OF 300	Nr:	
		Date:	
		Rev_	Date:

		A)	***GENERAL DATA***							
#	1		Company / Customer							
#	2		Contact							
#	3		Branch / Distributor							
#	4		Order quantity							
	5		Delivery time							
		B_1)	***ELECTRIC MOTOR***			*B_2)*	***HYDRAULIC MOTOR***			
	6		Motor Type							
#	7	P_{n1}	Rated motor Power		[kW]	V	Displacement		[cm³]	
#	8	P_{r1}	Motor power demand		[kW]	Δp	Max drop of pressure		[bar]	
	9	n_1	Input speed		[min-1]	Q	Max oil flow rate		[l/min]	
	10		No. of Poles							
	11		Motor mounting: B3 - B5 - B14							
		C)	***PLANETARY GEARBOX***							
#	12		Gearbox configuration							
#	13	i	Gear ratio							
#	14	n_2	Output speed		[min-1]					
#	15	M_{r2}	Output torque demand		[Nm]					
#	16	M_{p2}	Peak torque demand		[Nm]					
#	17	f_S	Service factor demand							
	18		Rotation of the output shaft [frontal view]:		**CW**			**CCW**		
#	19	L_{10H}	Bearings lifetime		[h]					
	20		Gears lifetime		[h]					
	21	SF_{min}	Safety for tooth root stress		standard reference (ISO preferred)					
	22	SH_{min}	Safety for flank pressure		standard reference (ISO preferred)					
		D)	***ADDITIONAL LOADS***							
	23	R_{c2}	Radial load on output shaft		[N]					
	24	x_2	Load application distance from shaft shoulder		[mm]					
	25	R_{c1}	Radial load on input shaft		[N]					
	26	x_1	Load application distance from shaft shoulder		[mm]					
	27	A_{n2}	Thrust load on output shaft (+ / -)		[N]					
	28	A_{n1}	Thrust load on input shaft (+ / -)		[N]					

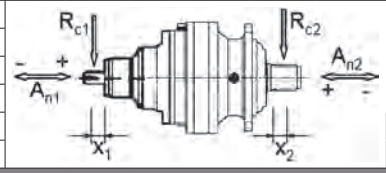

+ = push
- = pull

		E)	***APPLICATION***							
#	29		Type of application							
	30		Duty cycle	Time phase %	Time phase hours	Gearbox output torque [Nm]	Gearbox output speed [min-1]			
			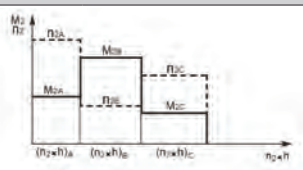	,,,,	,,,,					
				,,,,	,,,,					
				,,,,	,,,,					
				,,,,	,,,,					
				,,,,	,,,,					
	31		Notes about Duty Cycle:							
	32		Duty type	**S1**	**S2**	**S3**	**S4-S8**			
#	33	T_{AMB}	Ambient temperature range		[°C]					
		F)	***OPTIONS OR ADDITIONAL REQUESTS***							
	36		Lubrication							
	37		Supplementary cooling systems							
	38		Paint coating							
	39		To specific requests for testing							
		G)	***NOTES***							
	40		Notes and additional Customer requirements:							

Mandatory for the selection

The form, duly filled in, can be forwarded to our Technical Service which will assist the Customer in selecting the most suitable drive for the specific application.

13.1 PRODUCT SELECTION GUIDE

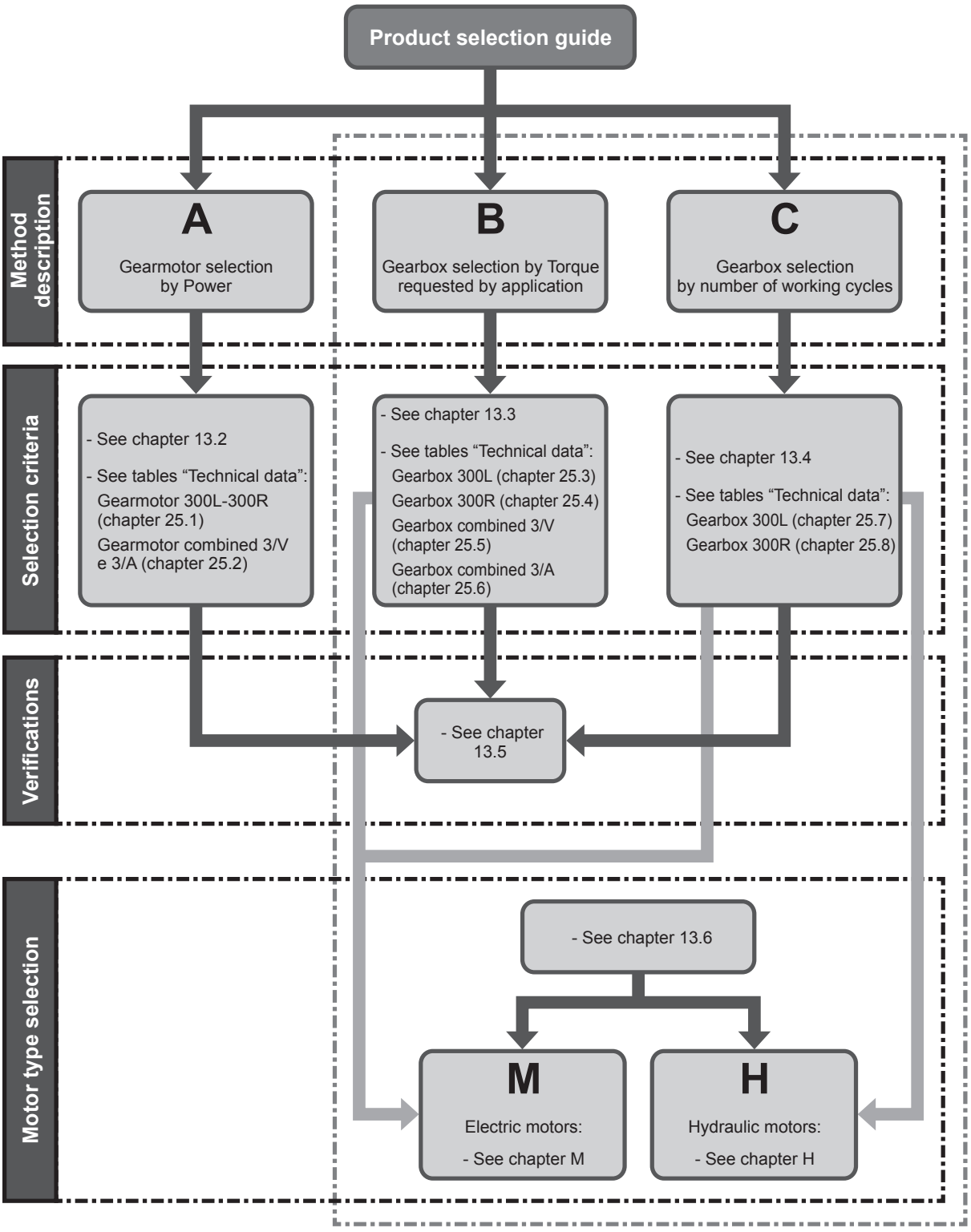

NOTE:
The selection criteria and specifications reported in this catalogue are not valid for every and each application, including those where the gearbox operates as a safety device preventing injury to persons or damage to objects, as is the case with hoisting equipment.
For these applications, the gearbox should be selected according to specific criteria and in compliance with the applicable safety regulations. Should this be the case we recommend that you seek advice from BONFIGLIOLI Technical Service.

For the selection of gear units in Atex configuration, see also the specific chapter on page 478.

13.2 METHOD A (Gearbox selection by power)

Based on application type, it should be defined :
a) Required service factor $\mathbf{f_S'}$ (see tab A4);

b) Required drive power:

$$P_{r1} = \frac{M_{r2} \times n_2}{9550 \times \eta_d} \quad (10)$$

Table (A3) lists the indicative values of efficiency ηd for the different types of gearboxes.

c) After required power $\mathbf{P_{r1}}$ and output speed $\mathbf{n_2}$ are known, locate the gearmotor rating charts and select the one relevant to normalized power $\mathbf{P_n}$ equal to or greater than $\mathbf{P_{r1}}$:

$$P_n \geq P_{r1} \quad (11)$$

Unless otherwise specified, power $\mathbf{P_n}$ listed in the motor rating chart refers to continuous duty S1.
For motors operating in conditions other than S1, determine type of duty according to CEI 2-3/IEC 60034-1 standards.
Note that for duty cycles from S2 to S8 and motor frame sizes up to 132 included, power may be upgraded over that specified for continuous duty. In this event, the condition to be verified is the following:

$$P_n = \frac{P_{r1}}{f_m} \quad (12)$$

The adjusting factor $\mathbf{f_m}$ can be obtained from table (A5).

(A 5)

	DUTY						
	S2			**S3***			**S4-S8**
	Cycle duration			Cyclic duration factor			Please contact us
	10	**30**	**60**	**25%**	**40%**	**60%**	
f_m	1.35	1.15	1.05	1.25	1.15	1.1	

* Cycle time must be equal to or less than 10 minutes. Should this not be the case contact our Technical Service for assistance.

Cyclic duration rate: see formula (25).

For the output speed $\mathbf{n_2}$, or closest to, select the gearmotor that yields a service factor $\mathbf{f_S}$ meeting the following condition:

$$f_S \geq f_S' \quad (13)$$

In case of **FP** configuration, please see Verification paragraph (chapter 13.5 - item g) .

13.3 METHOD B (Gearbox selection by Torque requested by application)

Based on application type, it should be defined :
a) Required service factor $\mathbf{f_S'}$ (see tab A4);

b) Determine calculated torque according to required output torque $\mathbf{M_{r2}}$ as follows:

$$M_{c2} = M_{r2} \times f_S' \quad (14)$$

c) Determine gear ratio from required output speed $\mathbf{n_2}$ and drive speed $\mathbf{n_1}$:

$$i = \frac{n_1}{n_2} \quad (15)$$

d) Once $\mathbf{M_{c2}}$ and **i** are determined, locate the gearbox rating chart for the drive speed $\mathbf{n_1}$ and select a gearbox featuring the ratio i nearest to calculated ratio that also satisfies the condition:

$$M_{n2} \geq M_{c2} \quad (16)$$

If a IEC-normalised motor is to be fitted onto the gearbox, check availability of the applicable adapter.

In case of **FP** configuration, please see Verification paragraph (chapter 13.5 - item g) .

13.4 METHOD C (Gearbox selection by number of working cycles)

a) Determine the following according to the required application:
- Required service factor $\mathbf{f_S'}$ (see tab. A4)
- required gearbox working life h
- required drive unit (hydraulic, electric or others).

b) Define the calculated torque with the required output torque M_{r2}:

$$M_{c2} = M_{r2} \times f_S' \quad (17)$$

c) Calculate the life factor with required working life h and output speed n_2.:

$$Fh_2 = (n_2 \times h) \quad (18)$$

d) Calculate the required reduction ratio:

$$i = \frac{n_1}{n_2} \quad (19)$$

e) Select gearbox size which, having a reduction ratio close to the calculated value, which satisties the following

$$M_{c2} \leq M_{n2} \quad (20)$$

$$Fh_2 \leq (n_2 \times h) \quad (21)$$

where M_{n2} and Fh_2 are indicated in the tables on technical features for each gearbox size.
In case of applications in which the required torque M_{r2} and speed n_2 vary within a wide range, best selection could be an equivalent required torque given by:

referred to:

$$M_{r2} = \sqrt[4]{\frac{(n_2 \times h)_A \times M_A^4 + (n_2 \times h)_B \times M_B^4 + (n_2 \times h)_C \times M_C^4 + \ldots}{(n_2 \times h)_A + (n_2 \times h)_B + (n_2 \times h)_C + \ldots}} \quad (22)$$

and calculating the life factor Fh with:

(A 6)

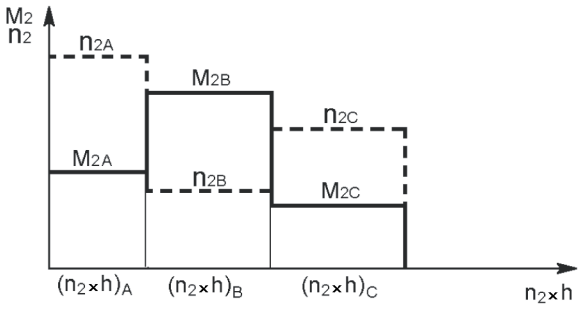

Then follow the same procedure as specified in d) and e).

$$Fh_{calc} = (n_2 \times h)_A + (n_2 \times h)_B + (n_2 \times h)_C + \ldots \quad (23)$$

In case of **FP** configuration, please see Verification paragraph (chapter 13.5 - item g) .

13.5 VERIFICATION

After selecting the drive units, please check the following:

a) Thermal power

Make sure that the thermal capacity of the gearbox is equal to or greater than the the mechanical power required by the application, as per equation (24).
If this is not the case provide a supplementary cooling system or select a larger gearbox.
When the duty cycle is formed by short operating periods and rest time is long enough for the unit to cool down, the thermal capacity is hardly significant and it may be omitted from calculation.
For ambient temperatures other than 20°C, intermittent duty and drive speed n_1 other than the reference speed listed in the rating charts, P_t is to be adjusted through thermal factor f_t and/or speed factor f_v as listed in table (A7).
Finally, make sure that the following condition is always satisfied:

$$P_{r1} \leq P_t \times f_t \times f_v \quad (24)$$

(A 7)

f_t					
t_a **max.** [°C]	Continuous duty	Intermittent duty			
		Cyclic duration factor % (I)			
		80	60	40	20
10	1.2	1.3	1.6	1.8	2.0
20	1.0	1.1	1.3	1.5	1.7
30	0.9	1.0	1.2	1.3	1.5
40	0.7	0.8	0.9	1.0	1.2
50	0.5	0.6	0.7	0.8	0.9

n_1	f_v
750	1.5
950	1.2
1500	1.0
2000	0.7

Cyclic duration factor is the relationship of operating time under load t_f to total cycle time ($t_f + t_r$, where t_r stands for time at rest), expressed as a percentage.

$$I = \frac{t_f}{t_f + t_r} \times 100 \quad (25)$$

Should the gear unit in the conventional configuration fall short of thermal capacity and not verify the condition (24) above, it is recommended that the fan cooled input shaft - ordering code FV_ _ is specified instead. The relevant thermal capacity is listed in the charts here after.

(A 8)

Thermal capacity P_t [kW] @ n_1= 1450 rpm							
		FV05B	FV06B	FV07A	FV07B	FV010B	FV011B
303	L1		-	-	-	-	-
304	L1	30	-	-	-	-	-
305	L1	31	-	-	-	-	-
306	L1	-	45	-	-	-	-
	L2	31	-	-	-	-	-
307	L1	-	-	49	49	-	-
	L2	36	-	-	-	-	-
309	L1	-	-	52	52	-	-
	L2	36	-	-	-	-	-
310	L1	-	-	-	-	62	-
	L2	-	49	-	-	-	-
	L3	36	-	-	-	-	-
311	L1	-	-	-	-	-	62 (*)
	L2	-	-	53	52	-	-
	L3	36	-	-	-	-	-
313	L1	-	-	-	-	-	-
	L2	-	-	57	57	-	-
	L3	36	-	-	-	-	-
314	L2	-	-	-	-	67	-
	L3	-	52	-	-	-	-
	L4	33	-	-	-	-	-
315	L2	-	-	-	-	-	72 (*)
	L3	-	-	57	57	-	-
	L4	36	-	-	-	-	-
316	L2	-	-	-	-	-	72 (*)
	L3	-	-	57	57	-	-
	L4	36	-	-	-	-	-
317	L2	-	-	-	-	-	77 (*)
	L3	-	-	62	62	-	-
	L4	36	-	-	-	-	-
318	L3	-	-	-	-	-	62 (*)
	L4	-	-	45	45	-	-
319	L3	-	-	-	-	-	77 (*)
	L4	-	-	57	57	-	-
321	L3	-	-	-	-	-	87 (*)
	L4	-	-	62	62	-	-
323	L4	-	-	-	-	-	87 (*)
325	L4	-	-	-	-	-	87 (*)

Thermal capacity P_t [kW] @ n_1= 1450 rpm			
		FV05B	FV06B
307	R2	52	-
309	R2	52	-
310	R2 (B)	-	82
	R2 (C)	-	82
311	R2 (B)	-	102
	R2 (C)	-	117
	R3	58	-
313	R2 (B)	-	102
	R2 (C)	-	117
	R3	58	-
314	R3 (B)	-	82
	R3 (C)	-	82
	R4	-	-
315	R3 (B)	-	102
	R3 (C)	-	117
	R4	58	-
316	R3 (B)	-	102
	R3 (C)	-	117
	R4	63	-
317	R3 (B)	-	117
	R3 (C)	-	127
	R4	68	-
318	R4 (B)	-	108
	R4 (C)	-	137
319	R4 (B)	-	122
	R4 (C)	-	142
321	R4 (B)	-	132
	R4 (C)	-	152

* @ n_1 = 1150 rpm

NOTE: The thermal power values indicated in the selection charts for each size apply to the versions without negative multidisc brake.
For the versions fitted with brakes, please contact our sales organization.

b) Supplementary cooling systems

In the event transmitted mechanical power is higher than transmissible thermal power (see tables of gearbox specifications), gearboxes are available complete with a cooling system.

These separate cooling systems are made up of an air-oil heat exchanger, a motor pump, a filter for warm oil and an electric system that incorporates an overload cutout for electric motors.
A special feature of these cooling systems is their low noise.

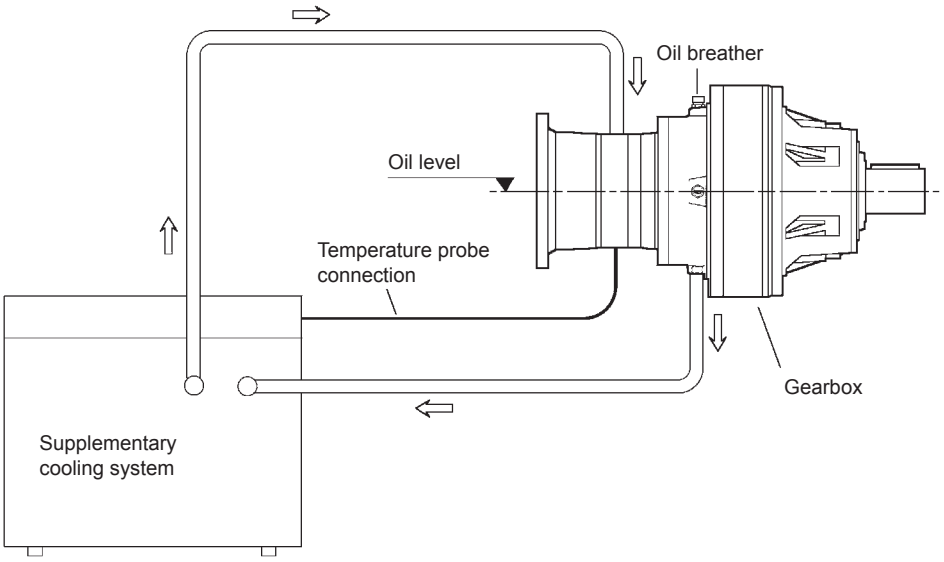

Technical data

(A 9)

		CR1	CR2	CR3
Power absorbtion	[kW]	0.55	0.75	1.1
Pumpflow	[l/min]	13	22	34
Air flow	[m^3/h]	850	1500	2000
Noise level at 1 mt.	[dB(A)]	68	70	75
Weight	[kg]	24	36	58

Selection criteria

Power P to be transmitted is known. Once you have determined that it is higher than thermal power P_t, calculate excess power P_s using this formula:

$$P_s = 0.1 \times (P - P_t) \quad (26)$$

Select cooling system size in chart (A10) according to ambient temperature ta (20° - 40°C).
Check that the cooling system you have selected will fit the gearbox (see table A11).
If this is not the case, contact our sales organization.

(A 10)

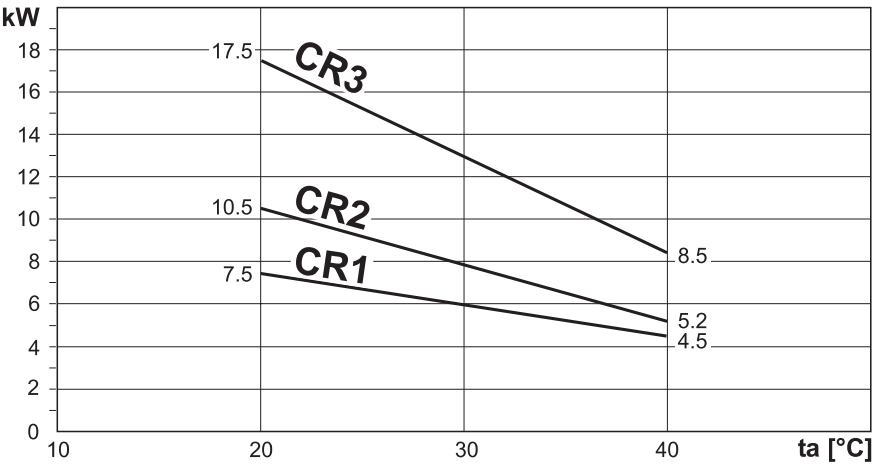

(A 11)

Gearbox	L1	L2	L3	L4	R2	R3	R4
306	CR1	CR1	—	—	—	—	—
307	CR1	CR1	—	—	CR1	—	—
309	CR1	CR1	CR1	—	CR1	—	—
310	CR2	CR1	CR1	—	—	CR1	—
311	CR2	CR1	CR1	—	CR1	CR1	—
313	CR2	CR1	CR1	—	CR1	CR1	—
314	CR3	CR2	CR1	—	—	CR1	—
315	CR3	CR2	CR1	—	—	CR1	—
316	CR3	CR2	CR1	—	—	CR1	—
317	CR3	CR2	CR2	CR1	—	—	—
318	CR3	CR2	CR2	CR1	—	—	—
319	CR3	CR2	CR2	CR1	—	—	—
321	CR3	CR2	CR2	CR2	—	—	—

Dimensions

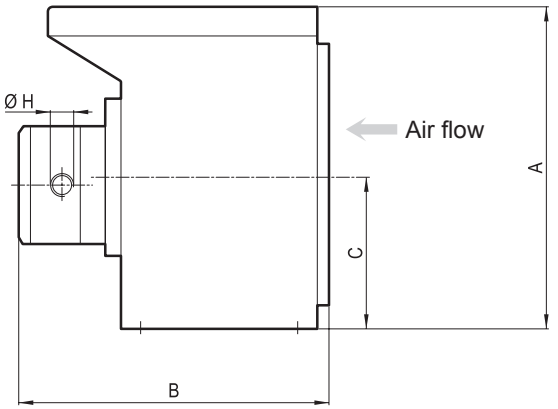

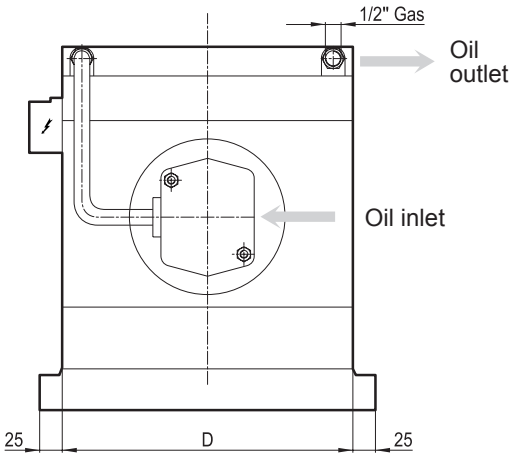

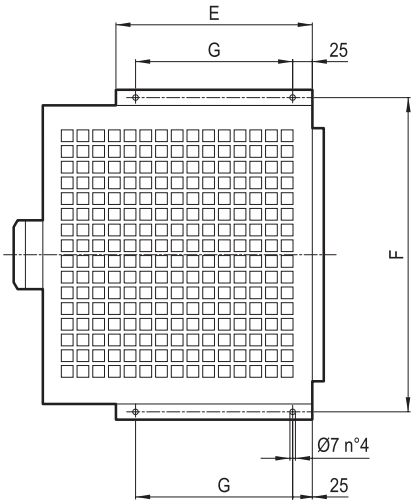

(A 12)

	A	B	C	D	E	F	G	H
CR1	410	395	193	370	250	400	200	1/2" Gas
CR2	450	405	203	470	250	500	200	3/4" Gas
CR3	495	455	225	520	290	550	240	3/4" Gas

c) Maximum torque
Make sure that neither the momentary peak torque nor the starting torque under load ever exceed the $\mathbf{M_{2max}}$ value that the gearbox is rated for (see figure A2).

d) Radial loads
Examine the application and establish:
- overhung load applying to input and/or output shaft through the following formula:

$$R_{c1-2} = \frac{2000 \times M_{r1-2} \times K_r}{d} \quad (27)$$

R_{c1-2} = overhung load [N]
1 = for input shaft
2 = for output shaft
M_{r1-2} = Torque at the shaft [Nm]
d = P.C.D [mm] of transmission element (sprocket, gear, pulley, etc.)
K_r =1 chain transmission
K_r =1.25 gear transmission
K_r =1.5-2.5 V-belt transmission

- Define the trust load position X onto shaft. Check this value with the chart indicating the load R_{x1-2} bearable by the gearbox. Check that the following is satisfied:

$$R_{c1-2} \leq Rx_{1-2} \times fh_{1-2} \quad (28)$$

where fh_{1-2} are the radial and thrust load corrective factor depending on the required life factor Fh_1 and Fh_2 (refers to radial and thrust loads in the "Dimensions" chapter).

e) Thrust loads
Check the thrust load, when exerted onto the output shaft, as specified for the radial load.
The following should be satisfied:

$$\pm A_{c2} \leq \pm A_{n2} \times fh_2 \quad (29)$$

(A 13)

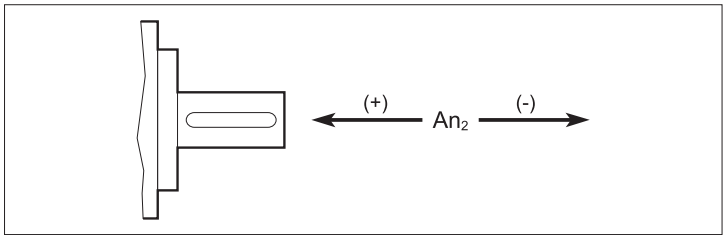

where fh_2 are the radial and thrust load corrective factor depending on the required life factor Fh_2 (refers to radial and thrust loads in the "Dimensions" chapter).

When a thrust load is combined with an axial load contact our Sales Dept. for a proper checking procedure.

f) VK output
Determine:
- Radial load $\mathbf{R_{c2}}$
- Thrust load $\mathbf{A_{c2}}$
- Offset x of load $\mathbf{R_{c2}}$

Look up the diagram relevant to the gearbox under study and identify permitted radial load **Rx2** corresponding to distance X and the ratio **An2/Rn2** nearest to value **Ac2/Rc2**.
Make sure the following equation is verified:

$$R_{x2} \geq R_{c2} \quad (30)$$

Values in the diagram refer to:
- n_2 = 10 rpm
- 10000 hrs theoretical lifetime

For different output speed $\mathbf{n_2}$, or lifetime expectancy, consider:
- a speed factor $\mathbf{f_{n2}}$ as per table (A14):

(A 14)

n_2	1	2.5	5	10	15	25	50	100
f_{n2}	2.0	1.51	1.23	1.00	0.88	0.76	0.62	0.50

- a lifetime factor $\mathbf{f_L}$ according to table (A15).

(A 15)

Lifetime	2500 h	5000 h	10000 h	15000 h	25000 h	50000 h	100000 h	100
f_L	0.66	0.81	1.00	1.13	1.32	1.62	2.00	0.50

This condition must be verified:

$$R_{x2} \times f_{n2} \geq R_{c2} \times f_L \quad (31)$$

g) FP output
On shaft-mounted installations, gearmotors produce a reaction force due to fixing position and motor weight and/or external loads from other connection elements.

These forces combination is added to normal load condition and will influence :
• berings life
• output shaft resistance
• flange tightening condition

In the event that there is an additional load (like a large size electric motor) and /or a single stage gearbox (with particular attention to sizes from 300 to 307), it' recommended to contact our Technical Service.
For the specific reaction loads due to fixing position, in the dimensional section for each size are reported the minimum lenght for torque reaction arms (single or double) that can reach the rated performances.

13.6 HOW TO SELECT THE MOTOR

13.6.1 Electric motor (see section M in this catalogue)

a) n_2 and dynamic efficiency η_d are known, calculate input power based on torque M_{r2} as follows

$$P_{r1} = \frac{M_{r2} \times n_2}{9550 \times \eta_d} \quad [kW] \qquad (32)$$

Table (A3) reports the values of efficiency η_d related to the different reduction stages of the gearboxes of series 300.

b) Look up the motor selection charts and select a size with such rated power to satisfy this condition:

$$P_{r1} \leq P_n \qquad (33)$$

4-pole motors and over should be preferred.

Unless otherwise specified, power P_n of motors indicated in the catalogue refers to continuous duty S1. For motors used in conditions other than S1, the type of duty required by reference to CEI 2-3/IEC 34-1 Standards must be mentioned.
For duties from S2 to S8 in particular and for motor frame 132 or smaller, extra power can be obtained with respect to continuous duty power, consequently the following condition must be satisfied:

$$\frac{P_{r1}}{f_m} \leq P_n \qquad (34)$$

The increased power factor f_m can be obtained from table (A5).

For duties other than S1 with considerable number of starts per hour, factor Z must be considered (it is ascertained by using the information in the motors chapter). Factor Z defines the maximum number of starts for the application under consideration.

13.6.2 Hydraulic motor (see section H in this catalogue)

Determine hydraulic motor type according to the application, choosing from the options given in guidance table (A16).

(A 16)

Duty	Light		Medium		Heavy	
Pressure p [bar]	<175		175 - 200		200 - 450	
Motor design	orbital 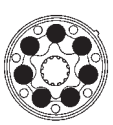	gear motor 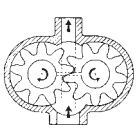	radial piston 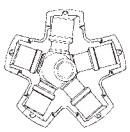	axial piston 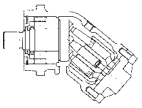	cam motor 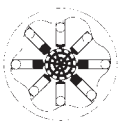	axial piston 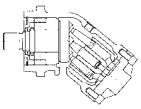
Speed	medium ≤ 700	high ≤ 3000	medium ≤ 500	high ≤ 4000	low ≤ 200	medium ≤ 4000
ηmh	0.80	0.85	0.95	0.93	0.93	0.93
ηv	0.90	0.87	0.95	0.95	0.95	0.95

Based on the specifications of gearbox input:

- input torque M_{r1} [Nm]
- input speed n_1 [min^{-1}]

and on allowed pressure p [bar] for the hydraulic circuit, calculate the displacement of the hydraulic motor by formula:

$$V_c = \frac{20 \times p \times M_{r1}}{p \times \eta mh} [cm^3] \quad (35)$$

where ηmh is the hydraulic mechanical efficiency of the motor (tab. A16).

Select a motor size with displacement V that satisfies the following condition:

$$V_c \leq V \quad (36)$$

Calculate the flow required for the hydraulic motor

$$Q_1 = \frac{V \times n_1}{\eta_v \times 1000} [l/min] \quad (37)$$

where η_v is volumetric efficiency.
For hydraulic orbital motors by BONFIGLIOLI TRASMITAL, please see section H in this catalogue. For other types of hydraulic motors, see the relevant technical literature.

14 INSTALLATION

Observing a few rules for correct installation is essential to the reliable and proper operation of the gearbox.
The rules set out here are intended as a preliminary guide to selecting gearbox.
For effective and proper installation, follow the instructions given in the Installation, use and maintenance manual available from our Sales network.
Following is a brief outline of installation rules:

a) Fastening:
– Place the gearbox on a surface providing adequate rigidity. Mating surfaces should be machined and flat.

– This applies especially to flange-mounted gearboxes with splined hollow output shafts (refer to the Installation, Operation and Maintenance Manual available on www.bonfiglioli.com).

– In applications that involve high radial loads at the output end, flange mounting is recommended for some gearboxes as this mounting pattern benefits from the double pilot diameters provided on these gearboxes (refer to the Installation, Operation and Maintenance Manual available on www.bonfiglioli.com).

– Make sure the gearbox is suitable for the required mounting position.

– Use bolts specified in Use and Maintenance Manual (available on www.bonfiglioli.com) and tighten the bolts to the rated values specified in the relevant charts.

b) Connections

– When fitting transmission elements onto the gearbox do not tap them with hammers or similar tools. To slide these parts in, use the service screws and tappings provided at the shaft ends.
Be sure to clean off any grease or rust preventative from the shafts before fitting any parts.

– Direction of rotation
Before wiring the motor please note the input/output shaft arrangement, as described in the diagram here after:

(A 17)

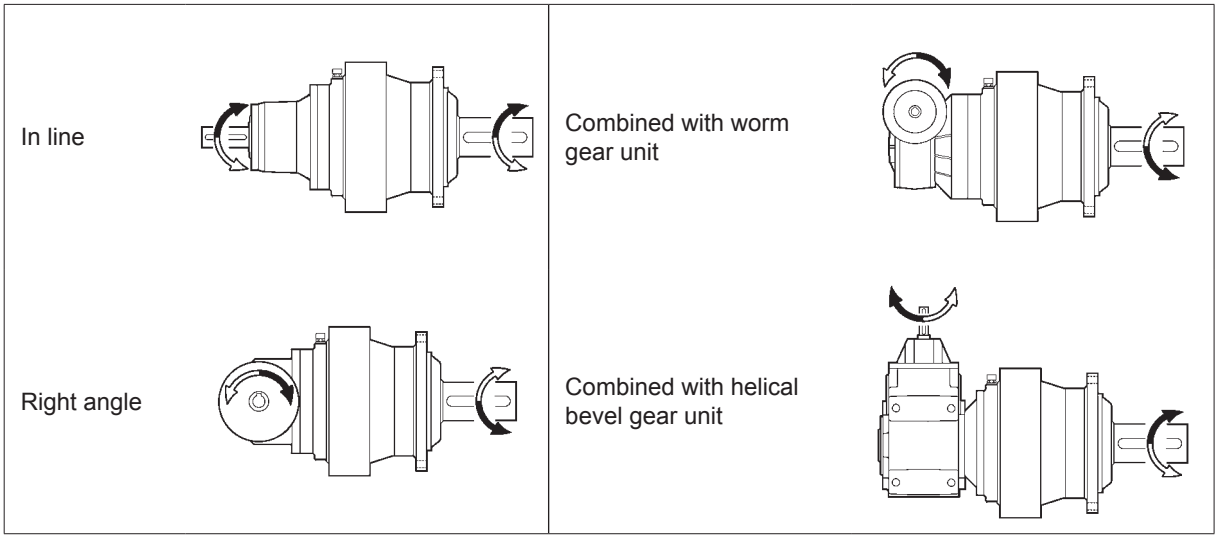

c) Paint coating

– Use paint compatible with the primer applied to the gearbox, see "Supply conditions".
Prior to painting, tape the seal rings installed on the shafts. Contact with the solvent may damage the seals with subsequent oil leakage.

d) Lubrication

– Prior to commissioning, fill the gearbox with the recommended type and quantity of oil (refer to the Installation, Operation and Maintenance Manual available on www.bonfiglioli.com).
The level is to be checked through the appropriate plug, or sight glass, each gearbox is provided with, and located according to the mounting position originally specified.

NOTE: Combined gearboxes feature separate lubrication for planetary stages and for worm gears (series 3/V) or bevel helical units (series 3/A).
The operations described above are not to be performed with life-lubed gearboxes, that are factory filled with synthetic oil.

15 MAINTENANCE

Check the tightness of mounting bolts after the initial 50 hours of operation.
Change the oil after 100-150 hours of operation.
Subsequently, change the oil every 2000-3000 hours operation, depending on the application. Alternatively change oil once a year.
However, oil level should be checked at regular intervals and topped up as required.
Check monthly if unit operates under intermittent duty, more frequently if duty is continuous.

16 STORAGE

Observe the following instructions to ensure correct storage of delivered products:

a) Do not store outdoors, in areas exposed to weather or with excessive humidity.

b) Always place boards, wood, or other material between the products and the floor.
The gearbox should not have direct contact with the floor.

c) For storage periods of over 60 days, all machined surfaces such as flanges, shafts and couplings must be protected with a suitable anti-oxidation product.

d) When units are expected to be in storage for more than 6 months, the following extra measures are required:
- Smear all machined parts with grease to prevent oxidation.
- Place the gearbox so that the breather plug is uppermost and fill it with oil (this does not apply to life-lubricated gearboxes). Before the gearbox is put into operation, the appropriate type and quantity of oil should be restored.

17 SUPPLY CONDITIONS

Gearboxes are supplied as follows:

a) arranged for installation in the mounting position specified in the purchase order;

b) Unlubricated. Inner parts are protected by a film of the oil used for testing purpose;

c) when no specific protection class is requested, the surfaces of gearboxes are protected to at least corrosivity class C2 (UNI EN ISO 12944-2), realized with a grey antioxidant water-based primer Ral 7042. Mating surface are not coated .

d) tested to factory specifications;

e) suitably packed;

f) complete with mounting hardware for IEC electric or hydrauilc motors;

g) gearboxes lubricated “for life” are factory filled with oil.

18 300 GEARBOX DESIGNATION

3 11 L 2 16.7 HZ

OUTPUT VERSION

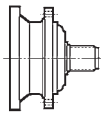

MZ: Splined male shaft

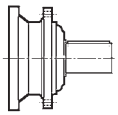

MC: Solid keyed shaft

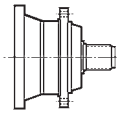

HZ: Heavy duty splined male shaft

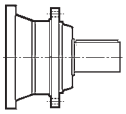

HC: Heavy duty solid keyed shaft

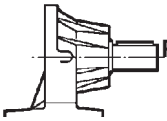

PZ: Foot base with splined shaft

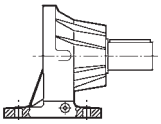

PC: Foot base with solid keyed shaft

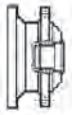

FZ / FZB: Hollow splined shaft

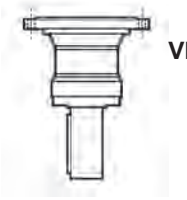

VK: Reinforced output with heavy duty keyed shaft for stirrers and mixer

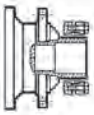

FP: Hollow shaft for shrink disc

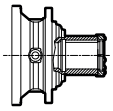

FDK: Hollow shaft with double keyway

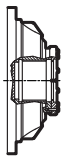

FZP: Hollow splined shaft with axial blockage device (recommended for shaft mounted installation)

Reduction ratio

Fill in the value of the transm. ratio (including point and decimals) reported in the selection charts

Es. : 1/5.33 = 5.33 1/44.6 = 44.6 1/131 = 131

No. OF REDUCTIONS

1, 2, 3, 4

DESIGN

L = Linear

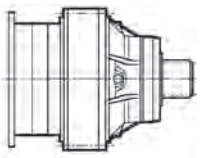

R = Right angle

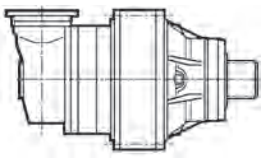

GEARBOX SIZE

00 = 300	244	**05** = 305	288	**10** = 310	336	**15** = 315	384	**19** = 319	426
01 = 301	254	**06** = 306	300	**11** = 311	348	**16** = 316	396	**21** = 321	436
03 = 303	264	**07** = 307	312	**13** = 313	360	**17** = 317	406	**23** = 323	446
04 = 304	276	**09** = 309	324	**14** = 314	372	**18** = 318	416	**25** = 325	450

SERIES

6A S5EC A A W0A ... ...

OPTIONS

GASKET
STANDARD = NBR
PV = Fluoro elastomer

SURFACE PROTECTION
C2 (default)**, C3, C4** 35

CERTIFICATES
AC, CC 36

ONLY FOR RIGHT ANGLE DESIGN
preferential input direction of rotation

RA = left
RO = right

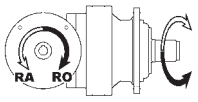

PAINTING
RAL7042 (default)**, RAL5010, RAL9005, RAL9006, RAL9010** 35

SUPPLEMENTARY COOLING SYSTEM
CR1, CR2, CR3 19

OUTPUT FITTINGS

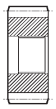
P... = Pinions

B0A = Splined bar

M0A = Sleeve coupling

G0A = Shrink disc

W0A = Flange

MOTOR FLANGE ORIENTATION 459

MOUNTING POSITION 36

INPUT

Without motor adaptor

V9AA	V9AC	V9AE	V9AG	V9AL
V9AB	V9AD	V9AF	V9AH	

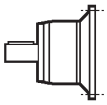
Input keyed shaft

	V01A	V01B	V05B	V06B	V07A	V07B	V10B	V11B	V15B
diam.	Ø24	Ø38	Ø48	Ø60	Ø60	Ø80	Ø80	Ø80	Ø120

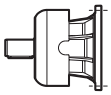
Solid input shaft with fan

	FV05B	FV06B	FV07A	FV07B	FV10B	FV11B
diam.	Ø48	Ø60	Ø60	Ø80	Ø80	Ø80

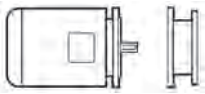
Electric motor connection **P+IEC** (P71...P250)

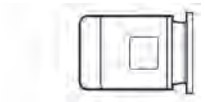
Integrated gearmotor with in-built compact electric motor (available up to size 307) **S2, S3, S4**

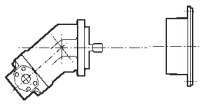
Hydraulic Motor connection **S5AP, COAA, HOBA, ...** 459

Hydraulic motor MG 469

ONLY WITH HYDRAULIC MOTOR ADAPTOR

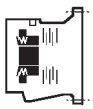

Standard negative multidisc brake

6 = Type : **4, 5, 6**
A = Braking torque : **A, B, C, ...** 458

Negative multidisc brake for MG hydraulic motor 475
SF = Without brake

19 3/V GEARBOX DESIGNATION

3/V 05 L 3 623 PC

OUTPUT VERSION

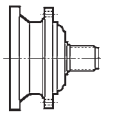

MZ: Splined male shaft

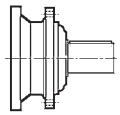

MC: Solid keyed shaft

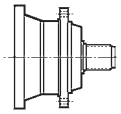

HZ: Heavy duty splined male shaft

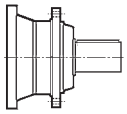

HC: Heavy duty solid keyed shaft

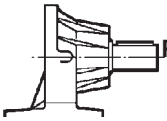

PZ: Foot base with splined shaft

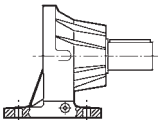

PC: Foot base with solid keyed shaft

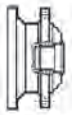

FZ / FZB: Hollow splined shaft

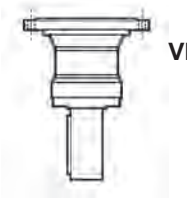

VK: Reinforced output with heavy duty keyed shaft for stirrers and mixer

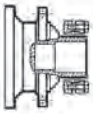

FP: Hollow shaft for shrink disc

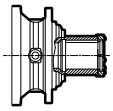

FDK: Hollow shaft with double keyway

REDUCTION RATIO
Fill in the value of the transm. ratio reported in the selection charts
Es. : 1/773 = 773

No. OF REDUCTIONS
3, 4

DESIGN
L = Combined 300 unit,
2 or 3 planetary stages + worm gear units

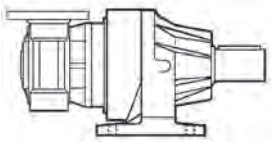

GEARBOX SIZE

00 = 3/V 00	248	**05** = 3/V 05	292	**10** = 3/V 10	340	**15** = 3/V 15	388	**19** = 3/V 19	430
01 = 3/V 01	258	**06** = 3/V 06	304	**11** = 3/V 11	352	**16** = 3/V 16	400	**21** = 3/V 21	440
03 = 3/V 03	268	**07** = 3/V 07	316	**13** = 3/V 13	364	**17** = 3/V 17	410		
04 = 3/V 04	280	**09** = 3/V 09	328	**14** = 3/V 14	376	**18** = 3/V 18	420		

SERIES
Combined 300 gearboxes / Worm gear units

P80 B5 AF W0A ...

OPTIONS

GASKET
STANDARD = NBR
PV = Fluoro elastomer

SURFACE PROTECTION
C2 (default)**, C3, C4**
35

PAINTING
RAL7042 (default)**, RAL5010, RAL9005, RAL9006, RAL9010**
35

CERTIFICATES
AC, CC
36

OUTPUT FITTINGS

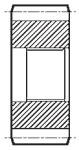
P... = Pinions

B0A = Splined bar

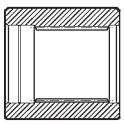
M0A = Sleeve coupling

G0A = Shrink disc

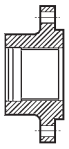
W0A = Flange

MOUNTING POSITION
36

DESIGN
B5, B14

ENTRATA

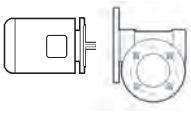
Electric motor connection **P+IEC** (P63...P180)

Input keyed shaft **HS**

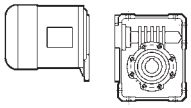
Integrated gearmotor with in-built compact electric motor **S1, S2, S3**

3/A 06 L 2 69.9 PC

OUTPUT VERSION

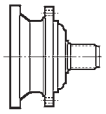
MZ: Splined male shaft

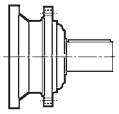
MC: Solid keyed shaft

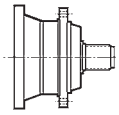
HZ: Heavy duty splined male shaft

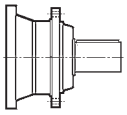
HC: Heavy duty solid keyed shaft

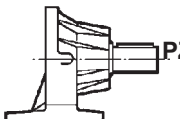
PZ: Foot base with splined shaft

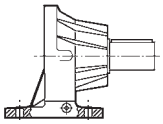
PC: Foot base with solid keyed shaft

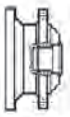
FZ / FZB: Hollow splined shaft

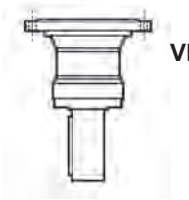
VK: Reinforced output with heavy duty keyed shaft for stirrers and mixer

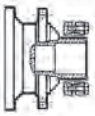
FP: Hollow shaft for shrink disc

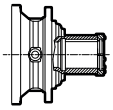
FDK: Hollow shaft with double keyway

REDUCTION RATIO
Fill in the value of the transm. ratio reported in the selection charts
Es. : 1/19.4 = 19.4 1/175 = 175

No. OF REDUCTIONS
2

DESIGN
L = Combined 300 unit,
1 planetary stages + A helical bevel units

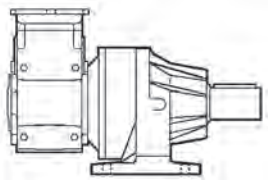

GEARBOX SIZE

00 = 3/A 00 (300+A10)	249	**05 =** 3/A 05 (305+A41**)**	293
01 = 3/A 01 (301+A20)	259	**06 =** 3/A 06 (306+A50)	305
03 = 3/A 03 (303+A30)	269	**07 =** 3/A 07 (307+A60)	317
04 = 3/A 04 (304+A41)	281		

SERIES
Combined 300 gearboxes / A series helical bevel gear units

S4 EF W04 ...

OPTIONS

GASKET
STANDARD = NBR
PV = Fluoro elastomer

SURFACE PROTECTION
C2 (default)**, C3, C4**
35

PAINTING
RAL7042 (default)**, RAL5010, RAL9005, RAL9006, RAL9010**
35

CERTIFICATES
AC, CC
36

OUTPUT FITTINGS

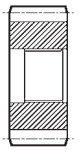
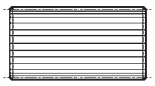
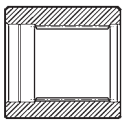

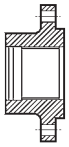

P... = Pinions | **B0A =** Splined bar | **M0A =** Sleeve coupling | **G0A =** Shrink disc | **W0A =** Flange

MOUNTING POSITION
36

INPUT

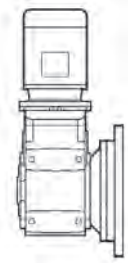

Integrated gearmotor with in-built compact electric motor **S2, S3, S4**

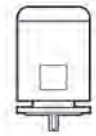

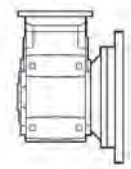

Electric motor connection **P+IEC** (P63...P180)

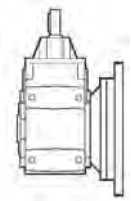

Input keyed shaft **HS**

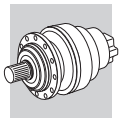

21 MOTOR DESIGNATION

MOTOR BRAKE

M 1LA 4 230/400-50 IP54 CLF ... **W** **FD** 7.5 R SB 220 SA ...

OPTIONS

BRAKE SUPPLY

RECTIFIER TYPE
NB, SB, NBR, SBR

BRAKE HAND RELEASE
R, RM

BRAKE TORQUE

BRAKE TYPE
FD, AFD (d.c. brake)
FA (a.c. brake)

TERMINAL BOX POSITION
W (default)**, N, E, S**

MOTOR MOUNTING
— (compact motor)
B5 (IEC - motor)

INSULATION CLASS
CL F standard
CL H option

DEGREE OF PROTECTION
IP55 standard (IP54 - brake motor)

VOLTAGE - FREQUENCY

POLE NUMBER
4, 6, 2/4, 2/6, 2/8, 2/12

MOTOR SIZE
1SD - 5LA (compact motor)
63A - 250M (IEC motor)

MOTOR TYPE
M = compact 3-phase
BN = IEC 3-phase

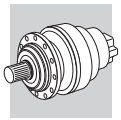

22 ADDITIONAL OPTIONS

22.1 SURFACE PROTECTION

When no specific protection class is requested, the surfaces of gearboxes are protected to at least corrosivity class C2 (UNI EN ISO 12944-2). For improved resistance to atmospheric corrosion, gearboxes can be delivered with C3 and C4 surface protection, obtained by painting the complete gearbox.

SURFACE PROTECTION	Typical environments	Maximum surface temperature	Corrosivity class according to UNI EN ISO 12944-2
C3	Urban and industrial environments with up to 100% relative humidity (medium air pollution)	120°C	C3
C4	Industrial areas, coastal areas, chemical plant, with up to 100% relative humidity (high air pollution)	120°C	C4

Gearboxes with optional protection to class C3 or C4 are available in a choice of colours.
If no specific colour is requested (see the “PAINTING” option) gearboxes are finished in RAL 7042.
Gearboxes can also be supplied with surface protection for corrosivity class C5 according to UNI EN ISO 12944-2. Contact our Technical Service for further details.

22.2 PAINTING

Gearboxes with optional protection to class C3 or C4 are available in the colours listed in the following table.

PAINTING	Colour	RAL number
RAL7042*	Traffic Grey A	7042
RAL5010	Gentian Blue	5010
RAL9005	Jet Black	9005
RAL9006	White Aluminium	9006
RAL9010	Pure White	9010

* Gearboxes are supplied in this standard colour if no other colour is specified.

NOTE – “PAINTING” options can only be specified in conjunction with “SURFACE PROTECTION” options.

22.3 CERTIFICATES

AC - Certificate of compliance
The document certifies the compliance of the product with the purchase order and the construction in conformity with the applicable procedures of the Bonfiglioli Quality System.

CC - Inspection certificate
The document entails checking on order compliance, the visual inspection of external conditions and of mating dimensions. Checking on main functional parameters in unloaded conditions is also performed along with oil seal proofing, both in static and in running conditions. Units inspected are sampled within the shipping batch and marked individually.

22.4 TACONITE SEALS

Taconite seals are recommended for environments characterised by the presence of abrasive dust or powders. Taconite seals incorporate a combination of sealing rings, labyrinths and a grease chamber. This option is available for **FP** and **FZ** version from size 314 to 325.
For detailed information please contact our Technical Service.

23 MOUNTING POSITION

The product designation is only complete when the mounting position is also specified. Please refer to table (A18) for in-line gear units and to (A19) for right angle drives.

23.1 In-line units

(A 18)

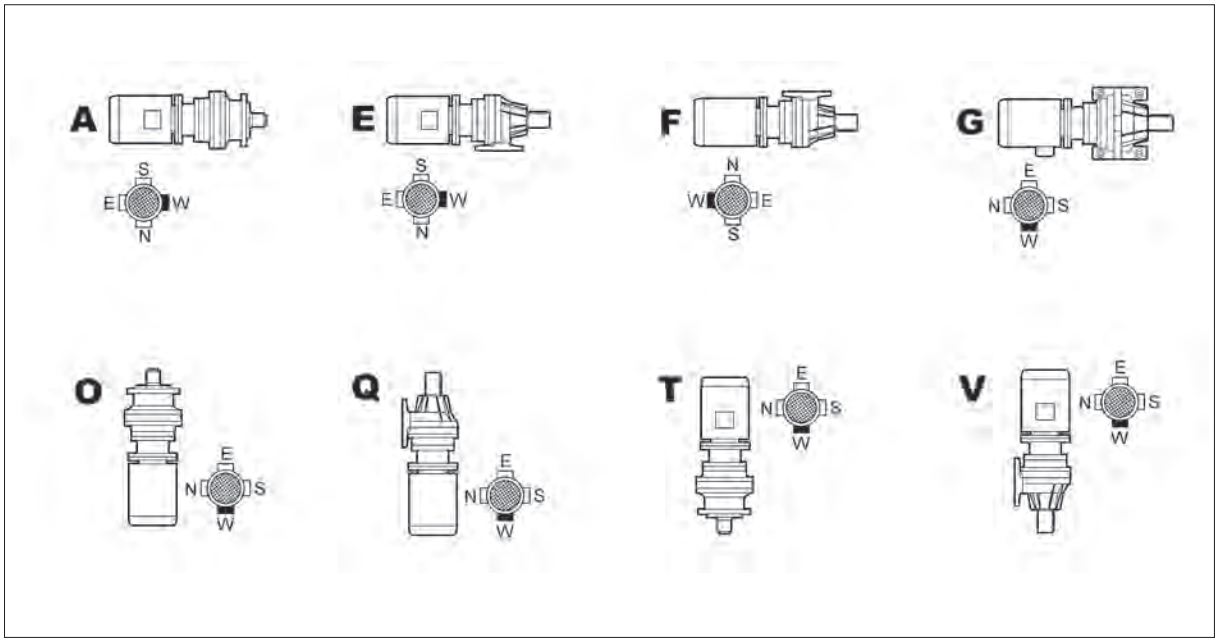

23.2 Right angle units

(A 19)

B0 - B1 - B2 - B3

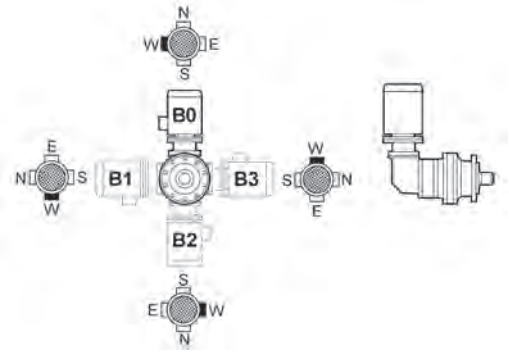

I0 - I1 - I2 - I3

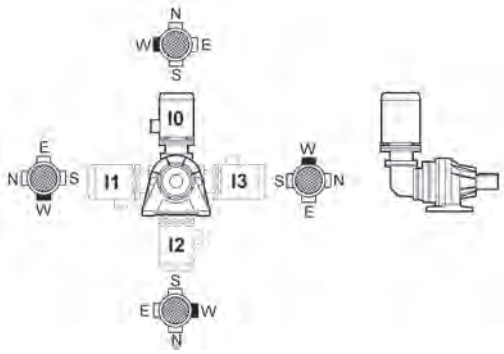

J0 - J1 - J2 - J3

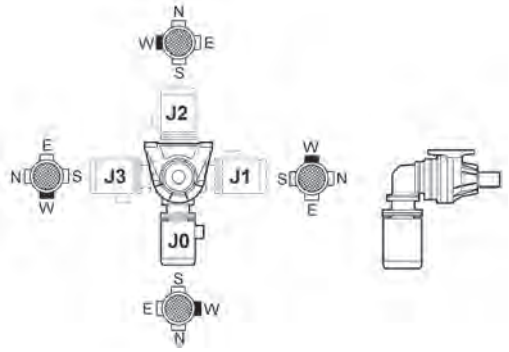

M0 - M1 - M2 - M3

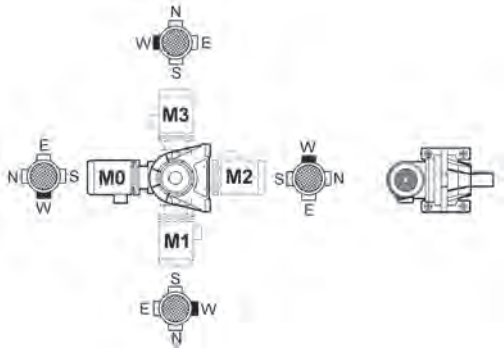

P0 - P1 - P2 - P3

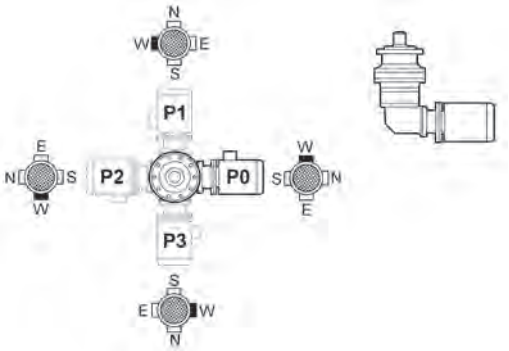

R0 - R1 - R2 - R3

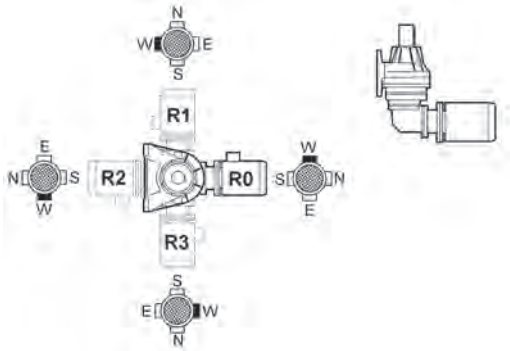

U0 - U1 - U2 - U3

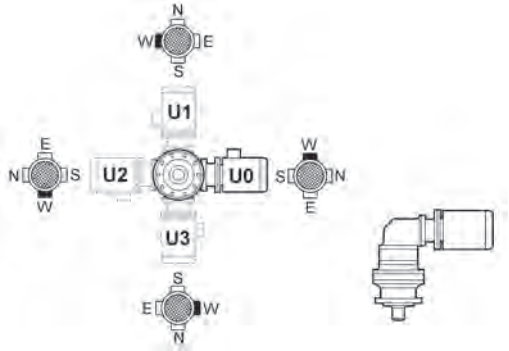

W0 - W1 - W2 - W3

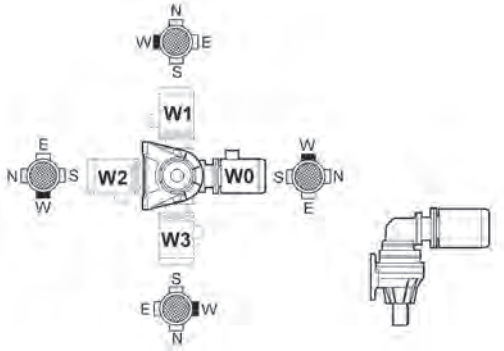

23.3 3/V Series

(A 20)

AA - AE - AF - AD

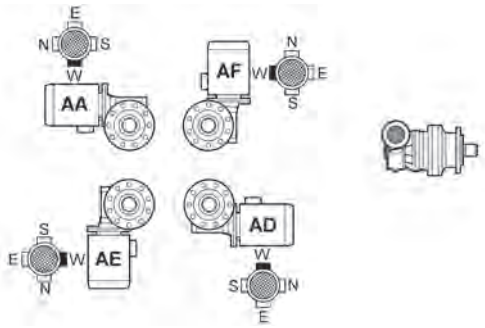

EA - EE - EF - ED

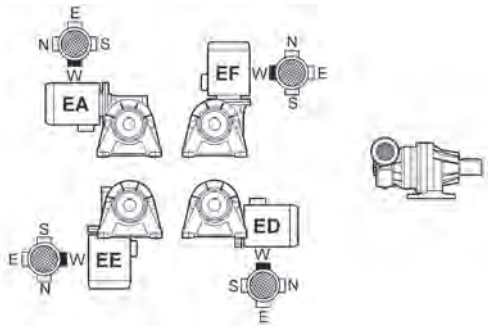

TA - TE - TF - TD

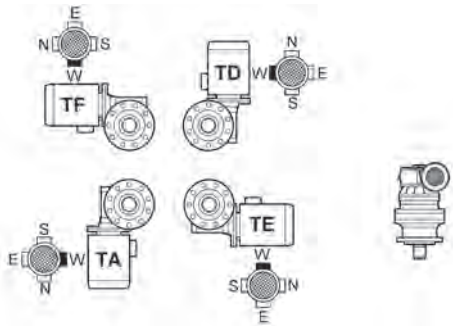

VA - VE - VF - VD

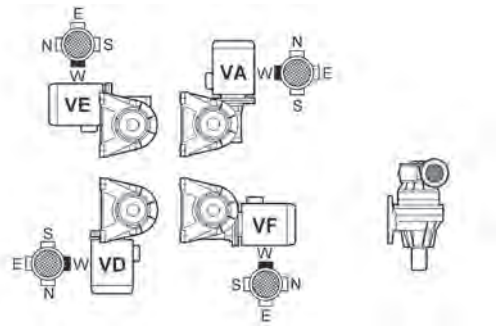

OA - OE - OF - OD

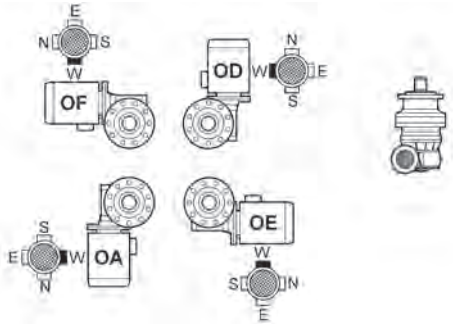

QA - QE - QF - QD

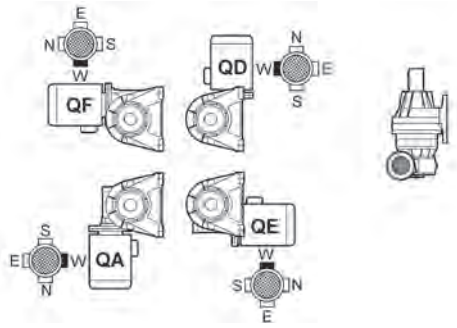

FA - FE - FF - FD

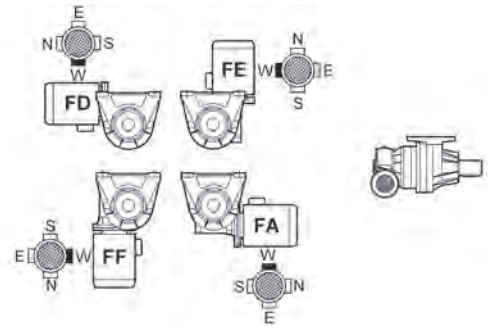

23.4 3/A Series

(A 21)

AA - AE - AF - AD

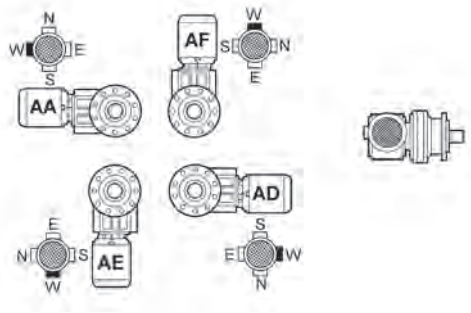

EA - EE - EF - ED

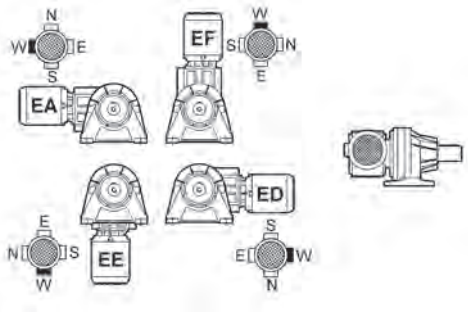

TA - TE - TF - TD

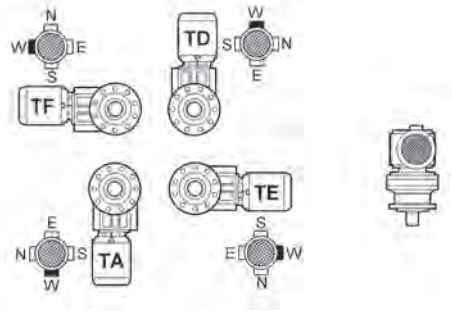

VA - VE - VF - VD

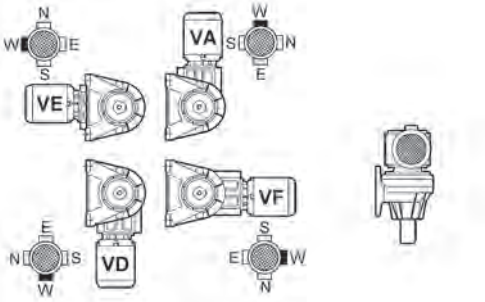

OA - OE - OF - OD

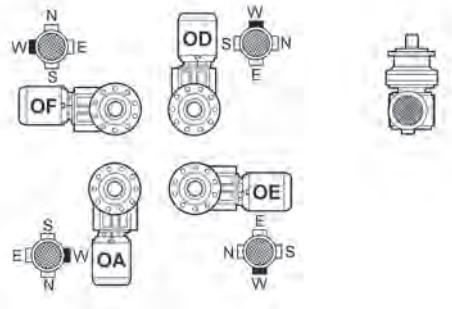

QA - QE - QF - QD

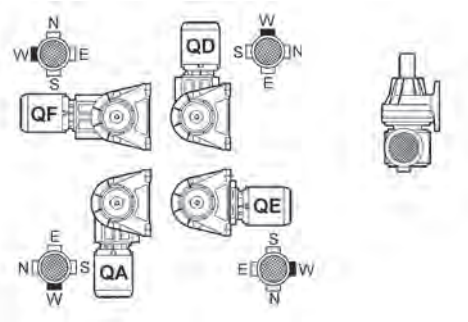

FA - FE - FF - FD

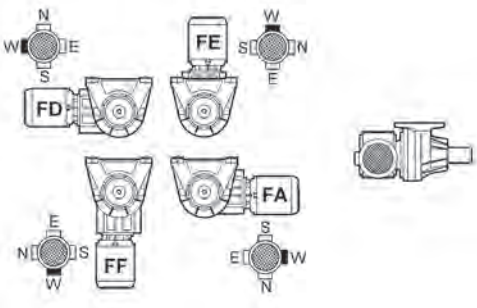

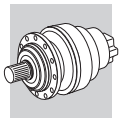

24 **LUBRICATION** (prior to start-up)

All gearboxes are oil-bath lubricated. For applications calling for gearboxes with a vertically positioned axis, in which oil coverage during operation would not be sufficient to ensure correct lubrica- tion of upper bearings, suitable life lubrication systems are used.
Before start-up, fill the gearbox with the correct quantity of oil, selecting the viscosity level as per table (A10). These gearboxes are provided with oil filling, level and drain plugs.

Operation of gear units is permitted at ambient temperatures between -20°C and +40°C. However, for temperatures between -20°C and -10°C unit may only start up after it has been progressively and evenly pre-heated, or otherwise initially operated unloaded.

Load may then be connected to the output shaft when the gear unit has reached the temperature of -10°C, or higher.

Prior to starting-up, fill the gearbox with the appropriate quantity of oil.
Gearboxes are generally provided with oil fill, level and drain plugs. As such, the mounting position needs always to be specified when ordering the gearbox.
For the reference charts of oil plugs placement and quantity of lubricant, refer to the Installation, Operation and Maintenance Manual (available on www.bonfiglioli.com).

– Note: For applications with non-routine operating conditions, consult factory with complete information.

– Oil temperature must not exceed 85-90°C in operation.

– Unless otherwise specified, gear units are supplied unlubricated. Primary gear units belonging to 3/V and 3/A combinations instead may be supplied factory filled with long-life synthetic lubricant, depending on their frame size, as indicated in the Use and Maintenance Manual (available at www.bonfiglioli.com).

– The oil capacities listed for the various types of unit are indicative only. Fill the gearbox up to the level plug, located as per the mounting position specified when ordering to ensure the gearbox is properly filled.

– Should transmitted power exceed the thermal capacity of the unit a supplementary cooling unit must be provided (see: Supplementary cooling systems).

NOTE: Combined gearboxes and gearmotors feature separate lubrication for planetary stages and for worm gearboxes (3/V) or helical bevel units (3/A).

24.1 Brakes lubrification

The hydraulically operated multidisc brakes are lubricated by the same oil as the gearbox.

25 RATING CHARTS

A GEARMOTOR SELECTION BY POWER

B GEARBOX SELECTION BY APPLICATION TORQUE

C GEARBOX SELECTION BY NUMBER OF WORKING CYCLES

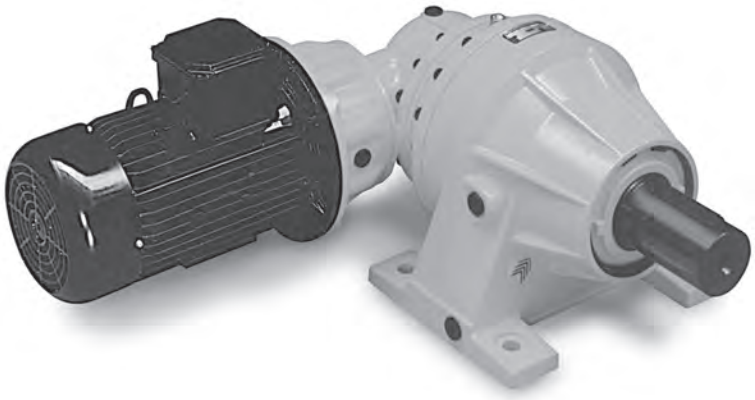

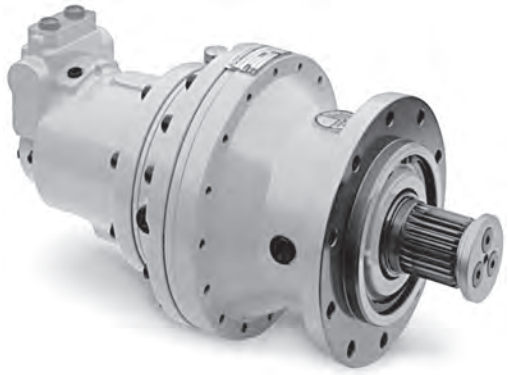

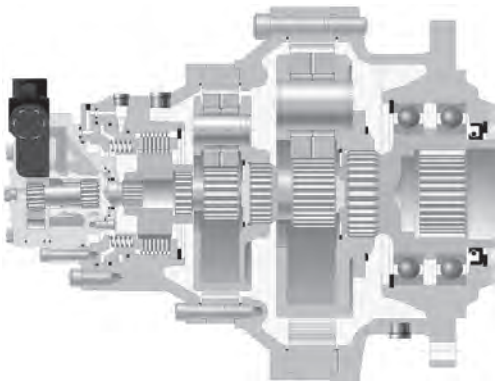

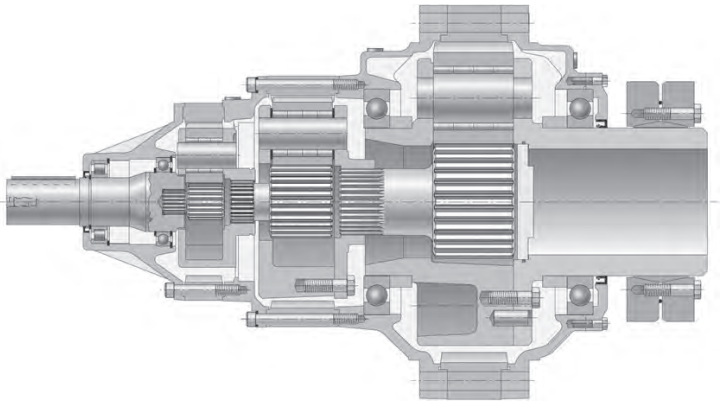

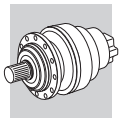

25.1 300 L - 300 R GEARMOTOR RATING CHARTS

Reading the rating chart.

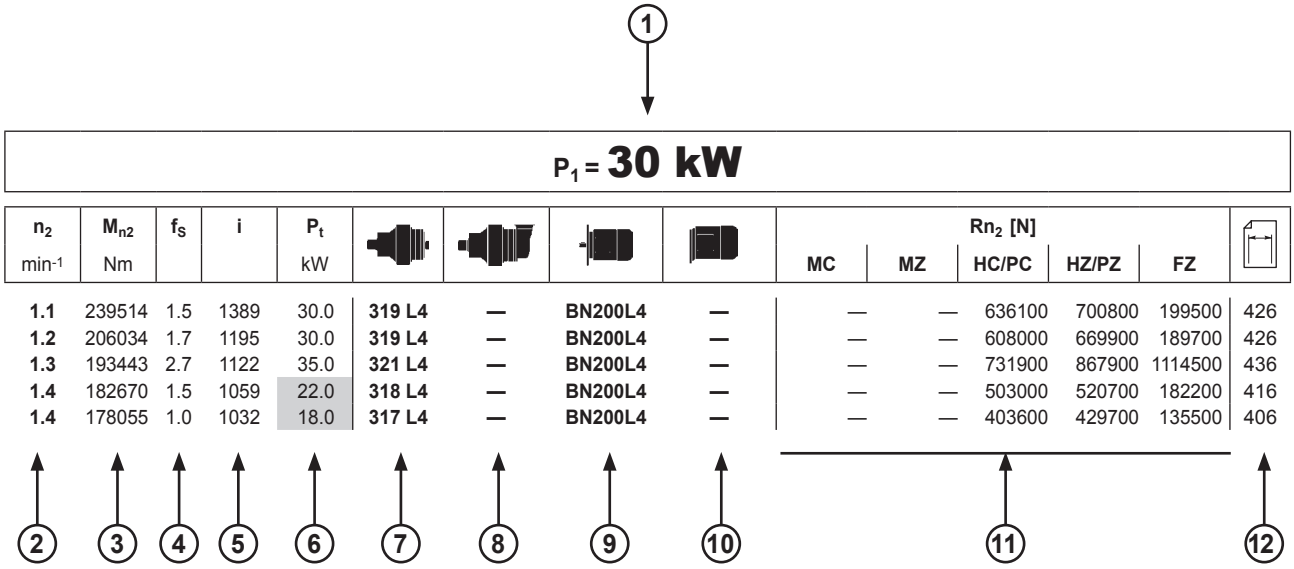

Thermal capacity lower than power applied

1	Rating of electric motor connected to the gearbox
2	Gearbox output speed
3	Rated torque to the output shaft based on: - specified service factor - 10000 h theoretical lifetime
4	Service factor
5	Gear ratio
6	Gearbox thermal capacity
7	Frame size of the in-line gear unit
8	Frame size of the right-angle gear unit. NOTE: letters (B) (C) near size indication identify different angle reduction dimensions. See dimensions pages.
9	IEC motor size and pole number
10	Integral motor frame size and pole number
11	Permitted overhung loading on output shaft, based on: - service factor f_S=1 - 10000 h theoretical lifetime - speed of output n_2 For forces not applied at shaft middlepoint, see diagrams provided in the specific gearbox overall dimensioning pages
12	Dimensions page. Gearmotor overall dimensions refer to matches with BONFIGLIOLI motors only

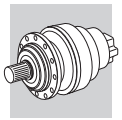

P_1 = 0.25 kW

n_2 min^{-1}	M_{n2} Nm	f_S	i	P_t kW					Rn_2 [N] MC	MZ	HC/PC	HZ/PZ	FZ	
0.47	4439	1.6	2916	6.0	**306 L4**	—	**BN71A4**	—	45000	51000	101000	119000	35000	300
0.57	3688	3.0	2423	7.5	**307 L4**	—	**BN71A4**	—	52000	65000	109000	145000	45000	312
0.59	3557	2.0	2337	6.0	**306 L4**	—	**BN71A4**	—	45000	51000	101000	119000	35000	300
0.62	3415	1.1	2243	6.0	**305 L4**	—	**BN71A4**	—	36000	42000	64000	74000	24000	288
0.67	3157	2.2	2074	6.0	**306 L4**	—	**BN71A4**	—	45000	51000	101000	119000	35000	300
0.69	3031	0.9	1991	6.0	**303 L4**	—	**BN71A4**	—	36000	42000	64000	74000	24000	264
0.69	3031	1.2	1991	6.0	**304 L4**	—	**BN71A4**	—	36000	42000	64000	74000	24000	288
0.69	3031	1.8	1991	6.0	**305 L4**	—	**BN71A4**	—	36000	42000	64000	74000	24000	288
0.74	2823	1.7	1854	6.0	**305 L4**	—	**BN71A4**	—	36000	42000	64000	74000	24000	288
0.76	2764	1.1	1815	6.0	**304 L4**	—	**BN71A4**	—	36000	42000	64000	74000	24000	288
0.87	2415	0.9	1586	6.0	**303 L4**	—	**BN71A4**	—	36000	42000	64000	74000	24000	264
0.87	2415	1.6	1586	6.0	**304 L4**	—	**BN71A4**	—	36000	42000	64000	74000	24000	288
0.87	2415	2.0	1586	6.0	**305 L4**	—	**BN71A4**	—	36000	42000	64000	74000	24000	288
1.0	2086	1.2	1370	6.0	**303 L4**	—	**BN71A4**	—	36000	42000	62200	74000	23800	264
1.0	2086	2.2	1370	6.0	**305 L4**	—	**BN71A4**	—	36000	42000	62200	74000	23800	288
1.0	2046	1.8	1344	6.0	**304 L4**	—	**BN71A4**	—	36000	42000	61900	74000	23700	288
1.1	1946	1.4	1278	6.0	**303 L4**	—	**BN71A4**	—	36000	41900	60900	73300	23300	264
1.1	1946	2.8	1278	6.0	**305 L4**	—	**BN71A4**	—	36000	41900	60900	73300	23300	288
1.1	1941	1.2	1275	6.0	**301 L4**	—	**BN71A4**	—	11800	11800	29800	34000	7750	254
1.1	1935	2.0	1271	6.0	**304 L4**	—	**BN71A4**	—	36000	41800	60800	73200	23200	288
1.2	1772	1.6	1164	6.0	**304 L4**	—	**BN71A4**	—	35200	40600	59200	71300	22600	288
1.2	1687	1.0	1108	6.0	**301 L4**	—	**BN71A4**	—	11300	11300	28600	32900	7400	254
1.3	1671	1.4	1098	6.0	**303 L4**	—	**BN71A4**	—	34500	39800	58200	70000	22100	264
1.3	1671	2.7	1098	6.0	**305 L4**	—	**BN71A4**	—	34500	39800	58200	70000	22100	288
1.4	1555	1.5	1022	6.0	**301 L4**	—	**BN71A4**	—	11000	11000	27900	32100	7200	254
1.4	1551	1.8	1018	6.0	**303 L4**	—	**BN71A4**	—	33600	38800	56900	68500	21600	264
1.4	1551	2.5	1018	6.0	**304 L4**	—	**BN71A4**	—	33600	38800	56900	68500	21600	288
1.5	1434	1.6	942	6.0	**301 L4**	—	**BN71A4**	—	10700	10700	27200	31300	7010	254
1.5	1364	1.6	896	6.0	**303 L4**	—	**BN71A4**	—	32200	37200	54800	65900	20700	264
1.7	1254	1.8	824	12.0	—	**303 R4**	**BN71A4**	—	31300	36200	53400	64300	20100	266
1.7	1246	0.9	819	6.0	**300 L4**	—	**BN71A4**	—	9940	9940	25600	29400	6540	244
1.7	1246	1.8	819	6.0	**301 L4**	—	**BN71A4**	—	10200	10200	26100	30000	6690	254
1.7	1242	2.2	816	6.0	**303 L4**	—	**BN71A4**	—	31300	36100	53300	64100	20000	264
1.7	1213	1.5	797	12.0	—	**303 R4**	**BN71A4**	—	31000	35800	52900	63600	19900	266
1.7	1213	2.8	797	12.0	—	**305 R4**	**BN71A4**	—	31000	35800	52900	63600	19900	278
1.8	1167	1.3	766	10.0	—	**301 R4**	**BN71A4**	—	9950	9950	25600	29400	6540	256
1.8	1149	1.0	755	6.0	**300 L4**	—	**BN71A4**	—	9680	9680	25000	28700	6360	244
1.8	1149	1.9	755	6.0	**301 L4**	—	**BN71A4**	—	9900	9900	25500	29300	6510	254
1.9	1093	2.0	718	6.0	**303 L4**	—	**BN71A4**	—	29900	34600	51300	61700	19200	264
2.0	1069	2.5	702	6.0	**304 L4**	—	**BN71A4**	—	29700	34300	50900	61300	19100	288
2.0	1065	2.5	699	12.0	—	**304 R4**	**BN71A4**	—	29700	34300	50900	61200	19000	278
2.1	1003	2.1	659	12.0	—	**303 R4**	**BN71A4**	—	29100	33600	50000	60100	18700	266
2.1	989	2.3	649	6.0	**303 L4**	—	**BN71A4**	—	29000	33400	49700	59800	18600	264
2.2	938	1.1	616	6.0	**300 L4**	—	**BN71A4**	—	9260	9260	24000	27600	6090	244
2.2	938	2.3	616	6.0	**301 L4**	—	**BN71A4**	—	9260	9260	24000	27600	6090	254
2.3	933	1.6	613	10.0	—	**301 R4**	**BN71A4**	—	9240	9240	23900	27500	6080	256
2.4	863	2.8	567	12.0	—	**303 R4**	**BN71A4**	—	27700	32000	47700	57400	17800	266
2.5	852	3.0	560	12.0	—	**304 R4**	**BN71A4**	—	27600	31800	47600	57200	17700	278
2.5	849	1.2	558	6.0	**300 L4**	—	**BN71A4**	—	8950	8950	23300	26700	5890	244
2.5	849	2.5	558	6.0	**301 L4**	—	**BN71A4**	—	8950	8950	23300	26700	5890	254
2.6	804	2.5	528	12.0	—	**303 R4**	**BN71A4**	—	27000	31200	46700	56200	17300	266
2.8	752	1.4	494	6.0	**300 L4**	—	**BN71A4**	—	8600	8600	22400	25800	5650	244
2.8	752	2.8	494	6.0	**301 L4**	—	**BN71A4**	—	8600	8600	22400	25800	5650	254
2.8	748	0.9	491	10.0	—	**300 R4**	**BN71A4**	—	8580	8580	22400	25700	5640	246
2.8	748	1.9	491	10.0	—	**301 R4**	**BN71A4**	—	8580	8580	22400	25700	5640	256
3.0	690	1.5	453	10.0	—	**300 R4**	**BN71A4**	—	8350	8350	21900	25100	5490	246
3.0	690	2.8	453	10.0	—	**301 R4**	**BN71A4**	—	8350	8350	21900	25100	5490	256
3.1	681	1.5	447	6.0	**300 L4**	—	**BN71A4**	—	8320	8320	21800	25000	5470	244
3.1	681	3.0	447	6.0	**301 L4**	—	**BN71A4**	—	8320	8320	21800	25000	5470	254
3.4	614	1.1	403	6.0	**300 L4**	—	**BN71A4**	—	8040	8040	21100	24300	5280	244
3.4	614	2.2	403	6.0	**301 L4**	—	**BN71A4**	—	8040	8040	21100	24300	5280	254
3.5	599	1.1	394	10.0	—	**300 R4**	**BN71A4**	—	7970	7970	21000	24100	5240	246
3.5	599	2.3	394	10.0	—	**301 R4**	**BN71A4**	—	7970	7970	21000	24100	5240	256
3.5	612	2.8	389	7.5	**303 L3**	—	**BN71A4**	—	24400	28200	42600	51300	15700	264
3.7	589	1.1	374	7.5	**300 L3**	—	**BN71A4**	—	7840	7840	20600	23700	5150	244

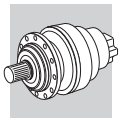

P_1 = 0.25 kW

n_2 min^{-1}	M_{n2} Nm	f_S	i	P_t kW					Rn_2 [N] MC	MZ	HC/PC	HZ/PZ	FZ	
3.7	589	2.3	374	7.5	**301 L3**	—	**BN71A4**	—	7840	7840	20600	23700	5150	254
3.8	553	1.8	363	10.0	—	**300 R4**	**BN71A4**	—	7760	7760	20500	23500	5100	246
4.2	503	1.9	330	6.0	**300 L4**	—	**BN71A4**	—	7520	7520	19900	22900	4940	244
4.6	471	1.4	299	7.5	**300 L3**	—	**BN71A4**	—	7270	7270	19300	22200	4780	244
4.6	471	2.8	299	7.5	**301 L3**	—	**BN71A4**	—	7270	7270	19300	22200	4780	254
4.7	443	2.1	291	10.0	—	**300 R4**	**BN71A4**	—	7210	7210	19100	22000	4740	246
5.1	408	2.3	268	10.0	—	**300 R4**	**BN71A4**	—	7020	7020	18700	21500	4610	246
5.8	377	1.7	240	7.5	**300 L3**	—	**BN71A4**	—	6760	6760	18100	20800	4440	244
5.8	361	1.8	237	10.0	—	**300 R4**	**BN71A4**	—	6740	6740	18000	20700	4430	246
6.2	348	2.6	221	7.5	**300 L3**	—	**BN71A4**	—	6580	6580	17600	20300	4320	244
6.4	327	2.8	215	10.0	—	**300 R4**	**BN71A4**	—	6520	6520	17500	20100	4280	246
7.2	302	2.2	192	7.5	**300 L3**	—	**BN71A4**	—	6280	6280	16900	19400	4130	244
9.6	218	3.0	143	10.0	—	**300 R4**	**BN71A4**	—	5690	5690	15500	17800	3740	246
10.4	209	2.6	133	12.0	—	**300 R3**	**BN71A4**	—	5550	5550	15100	17400	3650	246

P_1 = 0.37 kW

n_2 min^{-1}	M_{n2} Nm	f_S	i	P_t kW					Rn_2 [N] MC	MZ	HC/PC	HZ/PZ	FZ	
0.47	6672	1.0	2916	6.0	**306 L4**	—	**BN71B4**	**M1SD4**	45000	51000	101000	119000	35000	300
0.57	5543	2.0	2423	7.5	**307 L4**	—	**BN71B4**	**M1SD4**	52000	65000	109000	145000	45000	312
0.59	5346	1.3	2337	6.0	**306 L4**	—	**BN71B4**	**M1SD4**	45000	51000	101000	119000	35000	300
0.66	4744	1.5	2074	6.0	**306 L4**	—	**BN71B4**	**M1SD4**	45000	51000	101000	119000	35000	300
0.69	4555	1.2	1991	6.0	**305 L4**	—	**BN71B4**	**M1SD4**	36000	42000	64000	74000	24000	288
0.74	4243	1.1	1854	6.0	**305 L4**	—	**BN71B4**	**M1SD4**	36000	42000	64000	74000	24000	288
0.74	4217	2.4	1843	6.0	**306 L4**	—	**BN71B4**	**M1SD4**	45000	51000	101000	119000	35000	300
0.86	3653	2.4	1597	6.0	**306 L4**	—	**BN71B4**	**M1SD4**	45000	51000	101000	119000	35000	300
0.86	3629	1.1	1586	6.0	**304 L4**	—	**BN71B4**	**M1SD4**	36000	42000	64000	74000	24000	288
0.86	3629	1.3	1586	6.0	**305 L4**	—	**BN71B4**	**M1SD4**	36000	42000	64000	74000	24000	288
0.93	3374	3.0	1475	6.0	**306 L4**	—	**BN71B4**	**M1SD4**	45000	51000	101000	119000	35000	300
1.0	3135	1.5	1370	6.0	**305 L4**	—	**BN71B4**	**M1SD4**	36000	42000	62200	74000	23800	288
1.0	3074	1.2	1344	6.0	**304 L4**	—	**BN71B4**	**M1SD4**	36000	42000	61900	74000	23700	288
1.1	2927	2.9	1279	6.0	**306 L4**	—	**BN71B4**	**M1SD4**	45000	51000	99700	116100	34000	300
1.1	2924	1.0	1278	6.0	**303 L4**	—	**BN71B4**	**M1SD4**	36000	41900	60900	73300	23300	264
1.1	2924	1.9	1278	6.0	**305 L4**	—	**BN71B4**	**M1SD4**	36000	41900	60900	73300	23300	288
1.1	2908	1.3	1271	6.0	**304 L4**	—	**BN71B4**	**M1SD4**	36000	41800	60800	73200	23200	288
1.2	2663	1.1	1164	6.0	**304 L4**	—	**BN71B4**	**M1SD4**	35200	40600	59200	71300	22600	288
1.2	2512	0.9	1098	6.0	**303 L4**	—	**BN71B4**	**M1SD4**	33700	38900	57000	68600	21600	264
1.2	2512	1.8	1098	6.0	**305 L4**	—	**BN71B4**	**M1SD4**	34500	39800	58200	70000	22100	288
1.3	2338	1.0	1022	6.0	**301 L4**	—	**BN71B4**	**M1SD4**	10700	10700	27300	31400	7040	254
1.3	2330	1.2	1018	6.0	**303 L4**	—	**BN71B4**	**M1SD4**	33600	38800	56900	68500	21600	264
1.3	2330	1.7	1018	6.0	**304 L4**	—	**BN71B4**	**M1SD4**	33600	38800	56900	68500	21600	288
1.3	2330	2.3	1018	6.0	**305 L4**	—	**BN71B4**	**M1SD4**	33600	38800	56900	68500	21600	288
1.5	2156	1.1	942	6.0	**301 L4**	—	**BN71B4**	**M1SD4**	10700	10700	27200	31300	7010	254
1.5	2051	1.1	896	6.0	**303 L4**	—	**BN71B4**	**M1SD4**	32200	37200	54800	65900	20700	264
1.5	2051	2.1	896	6.0	**305 L4**	—	**BN71B4**	**M1SD4**	32200	37200	54800	65900	20700	288
1.7	1884	1.2	824	12.0	—	**303 R4**	**BN71B4**	**M1SD4**	31300	36200	53400	64300	20100	266
1.7	1884	2.2	824	12.0	—	**305 R4**	**BN71B4**	**M1SD4**	31300	36200	53400	64300	20100	278
1.7	1873	1.2	819	6.0	**301 L4**	—	**BN71B4**	**M1SD4**	10200	10200	26100	30000	6690	254
1.7	1867	1.5	816	6.0	**303 L4**	—	**BN71B4**	**M1SD4**	31300	36100	53300	64100	20000	264
1.7	1867	2.0	816	6.0	**304 L4**	—	**BN71B4**	**M1SD4**	31300	36100	53300	64100	20000	288
1.7	1867	2.9	816	6.0	**305 L4**	—	**BN71B4**	**M1SD4**	31300	36100	53300	64100	20000	288
1.7	1824	1.0	797	12.0	—	**303 R4**	**BN71B4**	**M1SD4**	31000	35800	52900	63600	19900	266
1.7	1824	1.9	797	12.0	—	**305 R4**	**BN71B4**	**M1SD4**	31000	35800	52900	63600	19900	278
1.8	1727	1.3	755	6.0	**301 L4**	—	**BN71B4**	**M1SD4**	9900	9900	25500	29300	6510	254
1.9	1643	1.3	718	6.0	**303 L4**	—	**BN71B4**	**M1SD4**	29900	34600	51300	61700	19200	264
1.9	1643	2.5	718	6.0	**305 L4**	—	**BN71B4**	**M1SD4**	29900	34600	51300	61700	19200	288
2.0	1606	1.6	702	6.0	**304 L4**	—	**BN71B4**	**M1SD4**	29700	34300	50900	61300	19100	288
2.0	1600	1.6	699	12.0	—	**304 R4**	**BN71B4**	**M1SD4**	29700	34300	50900	61200	19000	278
2.1	1508	1.4	659	12.0	—	**303 R4**	**BN71B4**	**M1SD4**	29100	33600	50000	60100	18700	266
2.1	1508	2.7	659	12.0	—	**305 R4**	**BN71B4**	**M1SD4**	29100	33600	50000	60100	18700	278
2.1	1486	1.6	649	6.0	**303 L4**	—	**BN71B4**	**M1SD4**	29000	33400	49700	59800	18600	264

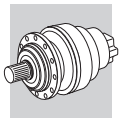

P_1 = 0.37 kW

n_2	M_{n2}	f_S	i	P_t					Rn_2 [N]					
min^{-1}	Nm			kW					MC	MZ	HC/PC	HZ/PZ	FZ	
2.1	1486	2.4	649	6.0	**304 L4**	—	**BN71B4**	**M1SD4**	29000	33400	49700	59800	18600	288
2.2	1410	1.5	616	6.0	**301 L4**	—	**BN71B4**	**M1SD4**	9260	9260	24000	27600	6090	254
2.2	1403	1.0	613	10.0	—	**301 R4**	**BN71B4**	**M1SD4**	9240	9240	23900	27500	6080	256
2.4	1297	1.9	567	12.0	—	**303 R4**	**BN71B4**	**M1SD4**	27700	32000	47700	57400	17800	266
2.4	1280	2.0	560	12.0	—	**304 R4**	**BN71B4**	**M1SD4**	27600	31800	47600	57200	17700	278
2.5	1276	1.7	558	6.0	**301 L4**	—	**BN71B4**	**M1SD4**	8950	8950	23300	26700	5890	254
2.5	1272	2.2	556	6.0	**303 L4**	—	**BN71B4**	**M1SD4**	27500	31700	47500	57100	17600	264
2.5	1272	2.9	556	6.0	**304 L4**	—	**BN71B4**	**M1SD4**	27500	31700	47500	57100	17600	288
2.6	1208	1.7	528	12.0	—	**303 R4**	**BN71B4**	**M1SD4**	27000	31200	46700	56200	17300	266
2.8	1130	0.9	494	6.0	**300 L4**	—	**BN71B4**	**M1SD4**	8400	8400	22000	25300	5520	244
2.8	1130	1.8	494	6.0	**301 L4**	—	**BN71B4**	**M1SD4**	8600	8600	22400	25800	5650	254
2.8	1126	2.4	492	6.0	**303 L4**	—	**BN71B4**	**M1SD4**	26400	30500	45800	55100	16900	264
2.8	1124	1.3	491	10.0	—	**301 R4**	**BN71B4**	**M1SD4**	8580	8580	22400	25700	5640	256
3.0	1037	1.0	453	10.0	—	**300 R4**	**BN71B4**	**M1SD4**	8350	8350	21900	25100	5490	246
3.0	1037	1.9	453	10.0	—	**301 R4**	**BN71B4**	**M1SD4**	8350	8350	21900	25100	5490	256
3.0	1033	2.2	452	12.0	—	**303 R4**	**BN71B4**	**M1SD4**	25700	29600	44600	53700	16500	266
3.1	1023	1.0	447	6.0	**300 L4**	—	**BN71B4**	**M1SD4**	8320	8320	21800	25000	5470	244
3.1	1023	2.0	447	6.0	**301 L4**	—	**BN71B4**	**M1SD4**	8320	8320	21800	25000	5470	254
3.1	1020	2.8	446	6.0	**303 L4**	—	**BN71B4**	**M1SD4**	25500	29500	44400	53400	16400	264
3.2	1008	2.5	426	7.5	**304 L3**	—	**BN71B4**	**M1SD4**	25200	29000	43800	52700	16100	288
3.3	946	2.6	414	12.0	—	**304 R4**	**BN71B4**	**M1SD4**	24900	28800	43400	52300	16000	278
3.3	945	2.5	413	6.0	**303 L4**	—	**BN71B4**	**M1SD4**	24900	28800	43400	52200	16000	264
3.4	922	1.5	403	6.0	**301 L4**	—	**BN71B4**	**M1SD4**	8040	8040	21100	24300	5280	254
3.4	951	2.0	402	7.5	**303 L3**	—	**BN71B4**	**M1SD4**	24700	28500	43100	51800	15800	264
3.5	901	1.5	394	10.0	—	**301 R4**	**BN71B4**	**M1SD4**	7970	7970	21000	24100	5240	256
3.5	893	2.2	390	12.0	—	**303 R4**	**BN71B4**	**M1SD4**	24400	28200	42700	51400	15700	266
3.5	920	1.8	389	7.5	**303 L3**	—	**BN71B4**	**M1SD4**	24400	28200	42600	51300	15700	264
3.7	885	1.5	374	7.5	**301 L3**	—	**BN71B4**	**M1SD4**	7840	7840	20600	23700	5150	254
3.8	833	2.8	364	12.0	—	**303 R4**	**BN71B4**	**M1SD4**	23900	27600	41800	50300	15300	266
3.8	831	1.2	363	10.0	—	**300 R4**	**BN71B4**	**M1SD4**	7760	7760	20500	23500	5100	246
3.8	831	2.4	363	10.0	—	**301 R4**	**BN71B4**	**M1SD4**	7760	7760	20500	23500	5100	256
4.0	807	3.0	341	7.5	**304 L3**	—	**BN71B4**	**M1SD4**	23400	27000	41000	49300	15000	288
4.1	768	3.0	336	12.0	—	**303 R4**	**BN71B4**	**M1SD4**	23200	26800	40800	49100	14900	266
4.1	756	1.3	330	6.0	**300 L4**	—	**BN71B4**	**M1SD4**	7520	7520	19900	22900	4940	244
4.1	756	2.5	330	6.0	**301 L4**	—	**BN71B4**	**M1SD4**	7520	7520	19900	22900	4940	254
4.3	760	2.4	321	7.5	**303 L3**	—	**BN71B4**	**M1SD4**	22900	26400	40300	48500	14700	264
4.4	715	2.6	313	12.0	—	**303 R4**	**BN71B4**	**M1SD4**	22700	26200	39900	48100	14600	266
4.6	708	0.9	299	7.5	**300 L3**	—	**BN71B4**	**M1SD4**	7270	7270	19300	22200	4780	244
4.6	708	1.8	299	7.5	**301 L3**	—	**BN71B4**	**M1SD4**	7270	7270	19300	22200	4780	254
4.7	666	1.4	291	10.0	—	**300 R4**	**BN71B4**	**M1SD4**	7210	7210	19100	22000	4740	246
4.7	666	2.8	291	10.0	—	**301 R4**	**BN71B4**	**M1SD4**	7210	7210	19100	22000	4740	256
5.1	614	1.5	268	10.0	—	**300 R4**	**BN71B4**	**M1SD4**	7020	7020	18700	21500	4610	246
5.7	567	1.1	240	7.5	**300 L3**	—	**BN71B4**	**M1SD4**	6760	6760	18100	20800	4440	244
5.7	567	2.3	240	7.5	**301 L3**	—	**BN71B4**	**M1SD4**	6760	6760	18100	20800	4440	254
5.8	543	1.2	237	10.0	—	**300 R4**	**BN71B4**	**M1SD4**	6740	6740	18000	20700	4430	246
5.8	543	2.4	237	10.0	—	**301 R4**	**BN71B4**	**M1SD4**	6740	6740	18000	20700	4430	256
6.2	523	1.7	221	7.5	**300 L3**	—	**BN71B4**	**M1SD4**	6580	6580	17600	20300	4320	244
6.4	492	1.9	215	10.0	—	**300 R4**	**BN71B4**	**M1SD4**	6520	6520	17500	20100	4280	246
7.1	454	1.4	192	7.5	**300 L3**	—	**BN71B4**	**M1SD4**	6280	6280	16900	19400	4130	244
7.1	454	2.9	192	7.5	**301 L3**	—	**BN71B4**	**M1SD4**	6280	6280	16900	19400	4130	254
7.7	419	2.1	177	7.5	**300 L3**	—	**BN71B4**	**M1SD4**	6110	6110	16500	19000	4020	244
7.8	401	2.2	175	10.0	—	**300 R4**	**BN71B4**	**M1SD4**	6090	6090	16500	18900	4000	246
8.6	363	2.4	159	10.0	—	**300 R4**	**BN71B4**	**M1SD4**	5890	5890	16000	18300	3870	246
9.6	328	2.0	143	10.0	—	**300 R4**	**BN71B4**	**M1SD4**	5690	5690	15500	17800	3740	246
9.7	336	2.6	142	7.5	**300 L3**	—	**BN71B4**	**M1SD4**	5670	5670	15400	17700	3730	244
10.3	314	1.7	133	12.0	—	**300 R3**	**BN71B4**	**M1SD4**	5550	5550	15100	17400	3650	246
10.5	310	2.8	131	7.5	**300 L3**	—	**BN71B4**	**M1SD4**	5520	5520	15100	17300	3630	244
10.6	297	2.9	130	10.0	—	**300 R4**	**BN71B4**	**M1SD4**	5510	5510	15000	17300	3620	246
11.8	274	2.4	116	7.5	**300 L3**	—	**BN71B4**	**M1SD4**	5300	5300	14500	16700	3490	244
12.9	252	2.6	106	12.0	—	**300 R3**	**BN71B4**	**M1SD4**	5160	5160	14200	16300	3390	246

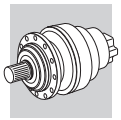

P_1 = 0.55 kW

n_2 min^{-1}	M_{n2} Nm	f_S	i	P_t kW					Rn_2 [N] MC	MZ	HC/PC	HZ/PZ	FZ	
0.57	8101	1.4	2423	7.5	**307 L4**	**—**	**BN80A4**	**M1LA4**	52000	65000	109000	145000	45000	312
0.57	8101	2.1	2423	7.5	**309 L4**	**—**	**BN80A4**	**—**	—	—	110000	145000	36000	324
0.67	6934	1.0	2074	6.0	**306 L4**	**—**	**BN80A4**	**M1LA4**	45000	51000	101000	119000	35000	300
0.68	6826	2.1	2041	7.5	**307 L4**	**—**	**BN80A4**	**M1LA4**	52000	65000	109000	145000	45000	312
0.69	6697	2.5	2003	7.5	**309 L4**	**—**	**BN80A4**	**—**	—	—	110000	145000	36000	324
0.75	6164	1.6	1843	6.0	**306 L4**	**—**	**BN80A4**	**M1LA4**	45000	51000	101000	119000	35000	300
0.79	5910	2.7	1767	7.5	**307 L4**	**—**	**BN80A4**	**M1LA4**	52000	65000	109000	145000	45000	312
0.81	5761	3.0	1723	7.5	**309 L4**	**—**	**BN80A4**	**—**	—	—	110000	145000	36000	324
0.87	5339	1.6	1597	6.0	**306 L4**	**—**	**BN80A4**	**M1LA4**	45000	51000	101000	119000	35000	300
0.87	5319	2.8	1591	7.5	**307 L4**	**—**	**BN80A4**	**M1LA4**	52000	65000	109000	145000	45000	312
0.94	4931	2.0	1475	6.0	**306 L4**	**—**	**BN80A4**	**M1LA4**	45000	51000	101000	119000	35000	300
1.0	4582	1.0	1370	6.0	**305 L4**	**—**	**BN80A4**	**M1LA4**	36000	42000	62200	74000	23800	288
1.1	4278	2.0	1279	6.0	**306 L4**	**—**	**BN80A4**	**M1LA4**	45000	51000	99700	116100	34000	300
1.1	4274	1.3	1278	6.0	**305 L4**	**—**	**BN80A4**	**M1LA4**	36000	41900	60900	73300	23300	288
1.1	4262	2.9	1274	7.5	**307 L4**	**—**	**BN80A4**	**M1LA4**	50200	63000	107100	140400	43600	312
1.1	4250	0.9	1271	6.0	**304 L4**	**—**	**BN80A4**	**M1LA4**	36000	41800	60800	73200	23200	288
1.3	3671	1.2	1098	6.0	**305 L4**	**—**	**BN80A4**	**M1LA4**	34500	39800	58200	70000	22100	288
1.3	3660	2.1	1095	6.0	**306 L4**	**—**	**BN80A4**	**M1LA4**	42900	48600	95200	110800	32200	300
1.4	3406	1.1	1018	6.0	**304 L4**	**—**	**BN80A4**	**M1LA4**	33600	38800	56900	68500	21600	288
1.4	3406	1.6	1018	6.0	**305 L4**	**—**	**BN80A4**	**M1LA4**	33600	38800	56900	68500	21600	288
1.4	3394	2.8	1015	6.0	**306 L4**	**—**	**BN80A4**	**M1LA4**	41900	47400	93000	108300	31400	300
1.6	2997	1.4	896	6.0	**305 L4**	**—**	**BN80A4**	**M1LA4**	32200	37200	54800	65900	20700	288
1.6	2933	2.6	877	6.0	**306 L4**	**—**	**BN80A4**	**M1LA4**	39900	45200	89000	103700	29900	300
1.7	2776	2.3	830	12.0	**—**	**306 R4**	**BN80A4**	**M1LA4**	39100	44300	87600	102000	29400	302
1.7	2754	1.5	824	12.0	**—**	**305 R4**	**BN80A4**	**M1LA4**	31300	36200	53400	64300	20100	278
1.7	2729	1.0	816	6.0	**303 L4**	**—**	**BN80A4**	**M1LA4**	31300	36100	53300	64100	20000	264
1.7	2729	1.4	816	6.0	**304 L4**	**—**	**BN80A4**	**M1LA4**	31300	36100	53300	64100	20000	288
1.7	2729	2.0	816	6.0	**305 L4**	**—**	**BN80A4**	**M1LA4**	31300	36100	53300	64100	20000	288
1.7	2705	2.8	809	6.0	**306 L4**	**—**	**BN80A4**	**M1LA4**	38800	44000	86900	101200	29200	300
1.7	2665	1.3	797	12.0	**—**	**305 R4**	**BN80A4**	**M1LA4**	31000	35800	52900	63600	19900	278
1.9	2401	1.7	718	6.0	**305 L4**	**—**	**BN80A4**	**M1LA4**	29900	34600	51300	61700	19200	288
2.0	2347	1.1	702	6.0	**304 L4**	**—**	**BN80A4**	**M1LA4**	29700	34300	50900	61300	19100	288
2.0	2339	1.1	699	12.0	**—**	**304 R4**	**BN80A4**	**M1LA4**	29700	34300	50900	61200	19000	278
2.1	2225	2.7	665	12.0	**—**	**306 R4**	**BN80A4**	**M1LA4**	36400	41200	82000	95400	27300	302
2.1	2203	1.0	659	12.0	**—**	**303 R4**	**BN80A4**	**M1LA4**	29100	33600	50000	60100	18700	266
2.1	2203	1.8	659	12.0	**—**	**305 R4**	**BN80A4**	**M1LA4**	29100	33600	50000	60100	18700	278
2.1	2172	1.1	649	6.0	**303 L4**	**—**	**BN80A4**	**M1LA4**	29000	33400	49700	59800	18600	264
2.1	2172	1.6	649	6.0	**304 L4**	**—**	**BN80A4**	**M1LA4**	29000	33400	49700	59800	18600	288
2.1	2172	2.1	649	6.0	**305 L4**	**—**	**BN80A4**	**M1LA4**	29000	33400	49700	59800	18600	288
2.3	2061	1.0	616	6.0	**301 L4**	**—**	**BN80A4**	**M1LA4**	9260	9260	24000	27600	6090	254
2.5	1895	1.3	567	12.0	**—**	**303 R4**	**BN80A4**	**M1LA4**	27700	32000	47700	57400	17800	266
2.5	1895	2.6	567	12.0	**—**	**305 R4**	**BN80A4**	**M1LA4**	27700	32000	47700	57400	17800	278
2.5	1871	1.4	560	12.0	**—**	**304 R4**	**BN80A4**	**M1LA4**	27600	31800	47600	57200	17700	278
2.5	1865	1.1	558	6.0	**301 L4**	**—**	**BN80A4**	**M1LA4**	8950	8950	23300	26700	5890	254
2.5	1860	1.5	556	6.0	**303 L4**	**—**	**BN80A4**	**M1LA4**	27500	31700	47500	57100	17600	264
2.5	1860	2.0	556	6.0	**304 L4**	**—**	**BN80A4**	**M1LA4**	27500	31700	47500	57100	17600	288
2.5	1860	3.0	556	6.0	**305 L4**	**—**	**BN80A4**	**M1LA4**	27500	31700	47500	57100	17600	288
2.6	1765	1.1	528	12.0	**—**	**303 R4**	**BN80A4**	**M1LA4**	27000	31200	46700	56200	17300	266
2.6	1765	2.2	528	12.0	**—**	**305 R4**	**BN80A4**	**M1LA4**	27000	31200	46700	56200	17300	278
2.8	1651	1.3	494	6.0	**301 L4**	**—**	**BN80A4**	**M1LA4**	8600	8600	22400	25800	5650	254
2.8	1646	1.6	492	6.0	**303 L4**	**—**	**BN80A4**	**M1LA4**	26400	30500	45800	55100	16900	264
2.8	1646	2.3	492	6.0	**304 L4**	**—**	**BN80A4**	**M1LA4**	26400	30500	45800	55100	16900	288
3.1	1515	1.3	453	10.0	**—**	**301 R4**	**BN80A4**	**M1LA4**	8350	8350	21900	25100	5490	256
3.1	1510	1.5	452	12.0	**—**	**303 R4**	**BN80A4**	**M1LA4**	25700	29600	44600	53700	16500	266
3.1	1510	2.4	452	12.0	**—**	**304 R4**	**BN80A4**	**M1LA4**	25700	29600	44600	53700	16500	278
3.1	1495	1.4	447	6.0	**301 L4**	**—**	**BN80A4**	**M1LA4**	8320	8320	21800	25000	5470	254
3.1	1490	1.9	446	6.0	**303 L4**	**—**	**BN80A4**	**M1LA4**	25500	29500	44400	53400	16400	264
3.1	1490	2.5	446	6.0	**304 L4**	**—**	**BN80A4**	**M1LA4**	25500	29500	44400	53400	16400	288
3.3	1473	1.7	426	7.5	**304 L3**	**—**	**BN80A4**	**M1LA4**	25200	29000	43800	52700	16100	288
3.4	1383	1.8	414	12.0	**—**	**304 R4**	**BN80A4**	**M1LA4**	24900	28800	43400	52300	16000	278
3.4	1382	1.7	413	6.0	**303 L4**	**—**	**BN80A4**	**M1LA4**	24900	28800	43400	52200	16000	264
3.4	1382	2.2	413	6.0	**304 L4**	**—**	**BN80A4**	**M1LA4**	24900	28800	43400	52200	16000	288
3.4	1348	1.0	403	6.0	**301 L4**	**—**	**BN80A4**	**M1LA4**	8040	8040	21100	24300	5280	254
3.5	1389	1.4	402	7.5	**303 L3**	**—**	**BN80A4**	**M1LA4**	24700	28500	43100	51800	15800	264
3.5	1389	2.7	402	7.5	**305 L3**	**—**	**BN80A4**	**M1LA4**	24700	28500	43100	51800	15800	288

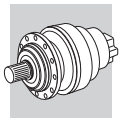

P_1 = 0.55 kW

n_2	M_{n2}	f_S	i	P_t					Rn_2 [N]					
min^{-1}	Nm			kW					MC	MZ	HC/PC	HZ/PZ	FZ	
3.5	1316	1.0	394	10.0	**—**	**301 R4**	**BN80A4**	**M1LA4**	7970	7970	21000	24100	5240	256
3.6	1305	1.5	390	12.0	**—**	**303 R4**	**BN80A4**	**M1LA4**	24400	28200	42700	51400	15700	266
3.6	1305	2.9	390	12.0	**—**	**305 R4**	**BN80A4**	**M1LA4**	24400	28200	42700	51400	15700	278
3.6	1344	1.3	389	7.5	**303 L3**	**—**	**BN80A4**	**M1LA4**	24400	28200	42600	51300	15700	264
3.6	1344	2.4	389	7.5	**305 L3**	**—**	**BN80A4**	**M1LA4**	24400	28200	42600	51300	15700	288
3.7	1293	1.0	374	7.5	**301 L3**	**—**	**BN80A4**	**M1LA4**	7840	7840	20600	23700	5150	254
3.8	1217	1.9	364	12.0	**—**	**303 R4**	**BN80A4**	**M1LA4**	23900	27600	41800	50300	15300	266
3.8	1217	2.4	364	12.0	**—**	**304 R4**	**BN80A4**	**M1LA4**	23900	27600	41800	50300	15300	278
3.8	1214	1.6	363	10.0	**—**	**301 R4**	**BN80A4**	**M1LA4**	7760	7760	20500	23500	5100	256
4.1	1180	2.1	341	7.5	**304 L3**	**—**	**BN80A4**	**M1LA4**	23400	27000	41000	49300	15000	288
4.1	1129	2.1	338	12.0	**—**	**304 R4**	**BN80A4**	**M1LA4**	23300	26900	40900	49200	14900	278
4.1	1122	2.0	336	12.0	**—**	**303 R4**	**BN80A4**	**M1LA4**	23200	26800	40800	49100	14900	266
4.2	1105	1.7	330	6.0	**301 L4**	**—**	**BN80A4**	**M1LA4**	7520	7520	19900	22900	4940	254
4.3	1111	1.7	321	7.5	**303 L3**	**—**	**BN80A4**	**M1LA4**	22900	26400	40300	48500	14700	264
4.4	1045	1.8	313	12.0	**—**	**303 R4**	**BN80A4**	**M1LA4**	22700	26200	39900	48100	14600	266
4.6	1034	1.3	299	7.5	**301 L3**	**—**	**BN80A4**	**M1LA4**	7270	7270	19300	22200	4780	254
4.8	973	1.0	291	10.0	**—**	**300 R4**	**BN80A4**	**M1LA4**	7210	7210	19100	22000	4740	246
4.8	973	1.9	291	10.0	**—**	**301 R4**	**BN80A4**	**M1LA4**	7210	7210	19100	22000	4740	256
4.8	970	2.7	290	12.0	**—**	**303 R4**	**BN80A4**	**M1LA4**	22100	25600	39100	47000	14200	266
5.0	956	2.3	276	7.5	**303 L3**	**—**	**BN80A4**	**M1LA4**	21800	25200	38500	46300	14000	264
5.1	944	2.5	273	7.5	**304 L3**	**—**	**BN80A4**	**M1LA4**	21700	25000	38300	46100	13900	288
5.2	897	1.0	268	10.0	**—**	**300 R4**	**BN80A4**	**M1LA4**	7020	7020	18700	21500	4610	246
5.2	897	2.1	268	10.0	**—**	**301 R4**	**BN80A4**	**M1LA4**	7020	7020	18700	21500	4610	256
5.4	891	2.1	258	7.5	**303 L3**	**—**	**BN80A4**	**M1LA4**	21300	24600	37700	45300	13600	264
5.4	853	2.2	255	12.0	**—**	**303 R4**	**BN80A4**	**M1LA4**	21200	24500	37600	45200	13600	266
5.8	829	1.6	240	7.5	**301 L3**	**—**	**BN80A4**	**M1LA4**	6760	6760	18100	20800	4440	254
5.9	794	1.6	237	10.0	**—**	**301 R4**	**BN80A4**	**M1LA4**	6740	6740	18000	20700	4430	256
6.0	772	2.4	231	12.0	**—**	**303 R4**	**BN80A4**	**M1LA4**	20500	23700	36500	43900	13200	266
6.3	764	1.2	221	7.5	**300 L3**	**—**	**BN80A4**	**M1LA4**	6580	6580	17600	20300	4320	244
6.3	764	2.3	221	7.5	**301 L3**	**—**	**BN80A4**	**M1LA4**	6580	6580	17600	20300	4320	254
6.3	762	3.0	220	7.5	**303 L3**	**—**	**BN80A4**	**M1LA4**	20200	23300	36000	43300	13000	264
6.5	719	1.3	215	10.0	**—**	**300 R4**	**BN80A4**	**M1LA4**	6520	6520	17500	20100	4280	246
6.5	719	2.5	215	10.0	**—**	**301 R4**	**BN80A4**	**M1LA4**	6520	6520	17500	20100	4280	256
7.2	664	1.0	192	7.5	**300 L3**	**—**	**BN80A4**	**M1LA4**	6280	6280	16900	19400	4130	244
7.2	664	2.0	192	7.5	**301 L3**	**—**	**BN80A4**	**M1LA4**	6280	6280	16900	19400	4130	254
7.3	658	2.8	190	7.5	**303 L3**	**—**	**BN80A4**	**M1LA4**	19200	22200	34400	41400	12300	264
7.8	612	1.4	177	7.5	**300 L3**	**—**	**BN80A4**	**M1LA4**	6110	6110	16500	19000	4020	244
7.8	612	2.9	177	7.5	**301 L3**	**—**	**BN80A4**	**M1LA4**	6110	6110	16500	19000	4020	254
7.9	587	1.5	175	10.0	**—**	**300 R4**	**BN80A4**	**M1LA4**	6090	6090	16500	18900	4000	246
8.8	531	1.6	159	10.0	**—**	**300 R4**	**BN80A4**	**M1LA4**	5890	5890	16000	18300	3870	246
9.7	479	1.4	143	10.0	**—**	**300 R4**	**BN80A4**	**M1LA4**	5690	5690	15500	17800	3740	246
9.7	479	2.7	143	10.0	**—**	**301 R4**	**BN80A4**	**M1LA4**	5690	5690	15500	17800	3740	256
9.8	491	1.8	142	7.5	**300 L3**	**—**	**BN80A4**	**M1LA4**	5670	5670	15400	17700	3730	244
10.5	459	1.2	133	12.0	**—**	**300 R3**	**BN80A4**	**M1LA4**	5420	5420	14800	17000	3570	246
10.5	459	2.5	133	12.0	**—**	**301 R3**	**BN80A4**	**M1LA4**	5550	5550	15100	17400	3650	256
10.6	453	1.9	131	7.5	**300 L3**	**—**	**BN80A4**	**M1LA4**	5520	5520	15100	17300	3630	244
10.7	434	2.0	130	10.0	**—**	**300 R4**	**BN80A4**	**M1LA4**	5510	5510	15000	17300	3620	246
12.0	401	1.6	116	7.5	**300 L3**	**—**	**BN80A4**	**M1LA4**	5300	5300	14500	16700	3490	244
13.1	368	1.8	106	12.0	**—**	**300 R3**	**BN80A4**	**M1LA4**	5160	5160	14200	16300	3390	246
13.1	354	2.4	106	10.0	**—**	**300 R4**	**BN80A4**	**M1LA4**	5150	5150	14100	16200	3380	246
13.3	363	2.4	105	7.5	**300 L3**	**—**	**BN80A4**	**M1LA4**	5130	5130	14100	16200	3370	244
16.2	296	2.9	85.6	7.5	**300 L3**	**—**	**BN80A4**	**M1LA4**	4790	4790	13300	15200	3150	244
16.3	294	2.2	85.2	12.0	**—**	**300 R3**	**BN80A4**	**M1LA4**	4790	4790	13200	15200	3150	246
19.9	242	2.7	69.9	7.5	**300 L3**	**—**	**BN80A4**	**M1LA4**	4480	4480	12500	14300	2950	244
20.4	236	2.8	68.2	12.0	**—**	**300 R3**	**BN80A4**	**M1LA4**	4440	4440	12400	14200	2920	246
21.5	231	2.4	64.8	7.5	**300 L2**	**—**	**BN80A4**	**M1LA4**	4370	4370	12200	14000	2870	244

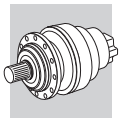

P_1 = 0.75 kW

n_2 min^{-1}	M_{n2} Nm	f_S	i	P_t kW					Rn_2 [N] MC	MZ	HC/PC	HZ/PZ	FZ	
0.55	11325	2.3	2523	11.0	**310 L4**	**—**	**BN80B4**	**—**	—	—	133000	166000	65000	336
0.58	10872	1.0	2423	7.5	**307 L4**	**—**	**BN80B4**	**M2SA4**	52000	65000	109000	145000	45000	312
0.58	10872	1.6	2423	7.5	**309 L4**	**—**	**BN80B4**	**—**	—	—	110000	145000	36000	324
0.69	9161	1.6	2041	7.5	**307 L4**	**—**	**BN80B4**	**M2SA4**	52000	65000	109000	145000	45000	312
0.69	9075	2.9	2022	11.0	**310 L4**	**—**	**BN80B4**	**—**	—	—	133000	166000	65000	336
0.70	8988	1.9	2003	7.5	**309 L4**	**—**	**BN80B4**	**—**	—	—	110000	145000	36000	324
0.76	8272	1.2	1843	6.0	**306 L4**	**—**	**BN80B4**	**M2SA4**	45000	51000	101000	119000	35000	300
0.79	7932	2.0	1767	7.5	**307 L4**	**—**	**BN80B4**	**M2SA4**	52000	65000	109000	145000	45000	312
0.81	7731	2.2	1723	7.5	**309 L4**	**—**	**BN80B4**	**—**	—	—	110000	145000	36000	324
0.87	7202	2.4	1605	7.5	**309 L4**	**—**	**BN80B4**	**—**	—	—	110000	145000	36000	324
0.88	7166	1.2	1597	6.0	**306 L4**	**—**	**BN80B4**	**M2SA4**	45000	51000	101000	119000	35000	300
0.88	7138	2.1	1591	7.5	**307 L4**	**—**	**BN80B4**	**M2SA4**	52000	65000	109000	145000	45000	312
0.95	6618	1.5	1475	6.0	**306 L4**	**—**	**BN80B4**	**M2SA4**	45000	51000	101000	119000	35000	300
0.99	6320	2.5	1408	7.5	**307 L4**	**—**	**BN80B4**	**M2SA4**	51900	65000	109000	144700	45000	312
1.0	6195	2.7	1380	7.5	**309 L4**	**—**	**BN80B4**	**—**	—	—	110000	143800	35800	324
1.1	5771	2.9	1286	7.5	**309 L4**	**—**	**BN80B4**	**—**	—	—	109200	140800	35000	324
1.1	5742	1.5	1279	6.0	**306 L4**	**—**	**BN80B4**	**M2SA4**	45000	51000	99700	116100	34000	300
1.1	5736	1.0	1278	6.0	**305 L4**	**—**	**BN80B4**	**M2SA4**	36000	41900	60900	73300	23300	288
1.1	5720	2.2	1274	7.5	**307 L4**	**—**	**BN80B4**	**M2SA4**	50200	63000	107100	140400	43600	312
1.2	5191	2.7	1157	7.5	**307 L4**	**—**	**BN80B4**	**M2SA4**	48600	60900	104100	136400	42200	312
1.3	4927	0.9	1098	6.0	**305 L4**	**—**	**BN80B4**	**M2SA4**	33700	38900	57000	68600	21600	288
1.3	4912	1.6	1095	6.0	**306 L4**	**—**	**BN80B4**	**M2SA4**	42900	48600	95200	110800	32200	300
1.4	4571	1.2	1018	6.0	**305 L4**	**—**	**BN80B4**	**M2SA4**	33600	38800	56900	68500	21600	288
1.4	4555	2.1	1015	6.0	**306 L4**	**—**	**BN80B4**	**M2SA4**	41900	47400	93000	108300	31400	300
1.6	4022	1.1	896	7.5	**305 L4**	**—**	**BN80B4**	**M2SA4**	46300	58000	99600	130500	40200	288
1.6	3936	2.0	877	6.0	**306 L4**	**—**	**BN80B4**	**M2SA4**	39900	45200	89000	103700	29900	300
1.7	3726	1.7	830	12.0	**—**	**306 R4**	**BN80B4**	**M2SA4**	39100	44300	87600	102000	29400	302
1.7	3696	1.1	824	12.0	**—**	**305 R4**	**BN80B4**	**M2SA4**	31300	36200	53400	64300	20100	278
1.7	3663	1.0	816	6.0	**304 L4**	**—**	**BN80B4**	**M2SA4**	31300	36100	53300	64100	20000	288
1.7	3663	1.5	816	6.0	**305 L4**	**—**	**BN80B4**	**M2SA4**	31300	36100	53300	64100	20000	288
1.7	3630	2.1	809	6.0	**306 L4**	**—**	**BN80B4**	**M2SA4**	38800	44000	86900	101200	29200	300
1.8	3577	1.0	797	12.0	**—**	**305 R4**	**BN80B4**	**M2SA4**	31000	35800	52900	63600	19900	278
1.9	3223	1.3	718	6.0	**305 L4**	**—**	**BN80B4**	**M2SA4**	29900	34600	51300	61700	19200	288
2.1	2986	2.0	665	12.0	**—**	**306 R4**	**BN80B4**	**M2SA4**	36400	41200	82000	95400	27300	302
2.1	2957	1.4	659	12.0	**—**	**305 R4**	**BN80B4**	**M2SA4**	29100	33600	50000	60100	18700	278
2.2	2915	1.2	649	6.0	**304 L4**	**—**	**BN80B4**	**M2SA4**	29000	33400	49700	59800	18600	288
2.2	2915	1.5	649	6.0	**305 L4**	**—**	**BN80B4**	**M2SA4**	29000	33400	49700	59800	18600	288
2.5	2544	1.0	567	12.0	**—**	**303 R4**	**BN80B4**	**M2SA4**	27700	32000	47700	57400	17800	266
2.5	2544	1.9	567	12.0	**—**	**305 R4**	**BN80B4**	**M2SA4**	27700	32000	47700	57400	17800	278
2.5	2511	1.0	560	12.0	**—**	**304 R4**	**BN80B4**	**M2SA4**	27600	31800	47600	57200	17700	278
2.5	2496	1.1	556	6.0	**303 L4**	**—**	**BN80B4**	**M2SA4**	27500	31700	47500	57100	17600	264
2.5	2496	1.5	556	6.0	**304 L4**	**—**	**BN80B4**	**M2SA4**	27500	31700	47500	57100	17600	288
2.5	2496	2.2	556	6.0	**305 L4**	**—**	**BN80B4**	**M2SA4**	27500	31700	47500	57100	17600	288
2.5	2468	2.9	550	12.0	**—**	**306 R4**	**BN80B4**	**M2SA4**	34100	38700	77400	90100	25600	302
2.7	2369	1.7	528	12.0	**—**	**305 R4**	**BN80B4**	**M2SA4**	27000	31200	46700	56200	17300	278
2.8	2216	0.9	494	6.0	**301 L4**	**—**	**BN80B4**	**M2SA4**	8400	8400	22000	25300	5520	254
2.8	2209	1.2	492	6.0	**303 L4**	**—**	**BN80B4**	**M2SA4**	26400	30500	45800	55100	16900	264
2.8	2209	1.7	492	6.0	**304 L4**	**—**	**BN80B4**	**M2SA4**	26400	30500	45800	55100	16900	288
2.8	2209	2.4	492	6.0	**305 L4**	**—**	**BN80B4**	**M2SA4**	26400	30500	45800	55100	16900	288
3.1	2033	0.9	453	10.0	**—**	**301 R4**	**BN80B4**	**M2SA4**	8350	8350	21900	25100	5490	256
3.1	2027	1.1	452	12.0	**—**	**303 R4**	**BN80B4**	**M2SA4**	25700	29600	44600	53700	16500	266
3.1	2027	1.8	452	12.0	**—**	**304 R4**	**BN80B4**	**M2SA4**	25700	29600	44600	53700	16500	278
3.1	2027	2.3	452	12.0	**—**	**305 R4**	**BN80B4**	**M2SA4**	25700	29600	44600	53700	16500	278
3.1	2006	1.0	447	6.0	**301 L4**	**—**	**BN80B4**	**M2SA4**	8320	8320	21800	25000	5470	254
3.1	2000	1.4	446	6.0	**303 L4**	**—**	**BN80B4**	**M2SA4**	25500	29500	44400	53400	16400	264
3.1	2000	1.9	446	6.0	**304 L4**	**—**	**BN80B4**	**M2SA4**	25500	29500	44400	53400	16400	288
3.1	2000	2.7	446	6.0	**305 L4**	**—**	**BN80B4**	**M2SA4**	25500	29500	44400	53400	16400	288
3.3	1976	1.2	426	7.5	**304 L3**	**—**	**BN80B4**	**M2SA4**	25200	29000	43800	52700	16100	288
3.4	1856	1.3	414	12.0	**—**	**304 R4**	**BN80B4**	**M2SA4**	24900	28800	43400	52300	16000	278
3.4	1855	1.3	413	6.0	**303 L4**	**—**	**BN80B4**	**M2SA4**	24900	28800	43400	52200	16000	264
3.4	1855	1.6	413	6.0	**304 L4**	**—**	**BN80B4**	**M2SA4**	24900	28800	43400	52200	16000	288
3.4	1855	2.5	413	6.0	**305 L4**	**—**	**BN80B4**	**M2SA4**	24900	28800	43400	52200	16000	288
3.5	1865	1.0	402	7.5	**303 L3**	**—**	**BN80B4**	**M2SA4**	24700	28500	43100	51800	15800	264
3.5	1865	2.0	402	7.5	**305 L3**	**—**	**BN80B4**	**M2SA4**	24700	28500	43100	51800	15800	288
3.6	1751	1.1	390	12.0	**—**	**303 R4**	**BN80B4**	**M2SA4**	24400	28200	42700	51400	15700	266

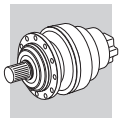

P_1 = 0.75 kW

n_2	M_{n2}	f_S	i	P_t					Rn_2 [N]					
min^{-1}	Nm			kW					MC	MZ	HC/PC	HZ/PZ	FZ	
3.6	1751	2.1	390	12.0	—	**305 R4**	**BN80B4**	**M2SA4**	24400	28200	42700	51400	15700	278
3.6	1804	0.9	389	7.5	**303 L3**	—	**BN80B4**	**M2SA4**	24400	28200	42600	51300	15700	264
3.6	1804	1.8	389	7.5	**305 L3**	—	**BN80B4**	**M2SA4**	24400	28200	42600	51300	15700	288
3.8	1633	1.4	364	12.0	—	**303 R4**	**BN80B4**	**M2SA4**	23900	27600	41800	50300	15300	266
3.8	1633	1.8	364	12.0	—	**304 R4**	**BN80B4**	**M2SA4**	23900	27600	41800	50300	15300	278
3.8	1633	2.8	364	12.0	—	**305 R4**	**BN80B4**	**M2SA4**	23900	27600	41800	50300	15300	278
3.9	1629	1.2	363	10.0	—	**301 R4**	**BN80B4**	**M2SA4**	7760	7760	20500	23500	5100	256
4.1	1584	1.5	341	7.5	**304 L3**	—	**BN80B4**	**M2SA4**	23400	27000	41000	49300	15000	288
4.1	1515	1.6	338	12.0	—	**304 R4**	**BN80B4**	**M2SA4**	23300	26900	40900	49200	14900	278
4.2	1506	1.5	336	12.0	—	**303 R4**	**BN80B4**	**M2SA4**	23200	26800	40800	49100	14900	266
4.2	1482	1.3	330	12.0	**301 L4**	—	**BN80B4**	**M2SA4**	23200	26800	40800	49100	14900	254
4.4	1492	1.2	321	7.5	**303 L3**	—	**BN80B4**	**M2SA4**	22900	26400	40300	48500	14700	264
4.4	1492	2.4	321	7.5	**305 L3**	—	**BN80B4**	**M2SA4**	22900	26400	40300	48500	14700	288
4.5	1403	1.3	313	12.0	—	**303 R4**	**BN80B4**	**M2SA4**	22700	26200	39900	48100	14600	266
4.5	1403	2.6	313	12.0	—	**305 R4**	**BN80B4**	**M2SA4**	22700	26200	39900	48100	14600	278
4.6	1376	2.5	307	12.0	—	**304 R4**	**BN80B4**	**M2SA4**	22500	26000	39700	47800	14500	278
4.7	1388	0.9	299	7.5	**301 L3**	—	**BN80B4**	**M2SA4**	7270	7270	19300	22200	4780	254
4.8	1305	1.4	291	10.0	—	**301 R4**	**BN80B4**	**M2SA4**	7210	7210	19100	22000	4740	256
4.8	1301	2.0	290	12.0	—	**303 R4**	**BN80B4**	**M2SA4**	22100	25600	39100	47000	14200	266
4.8	1301	2.8	290	12.0	—	**304 R4**	**BN80B4**	**M2SA4**	22100	25600	39100	47000	14200	278
5.1	1283	1.7	276	7.5	**303 L3**	—	**BN80B4**	**M2SA4**	21800	25200	38500	46300	14000	264
5.1	1267	1.9	273	7.5	**304 L3**	—	**BN80B4**	**M2SA4**	21700	25000	38300	46100	13900	288
5.2	1204	1.6	268	10.0	—	**301 R4**	**BN80B4**	**M2SA4**	7020	7020	18700	21500	4610	256
5.4	1195	1.5	258	7.5	**303 L3**	—	**BN80B4**	**M2SA4**	21300	24600	37700	45300	13600	264
5.5	1145	1.6	255	12.0	—	**303 R4**	**BN80B4**	**M2SA4**	21200	24500	37600	45200	13600	266
5.8	1112	1.2	240	7.5	**301 L3**	—	**BN80B4**	**M2SA4**	6760	6760	18100	20800	4440	254
5.9	1066	1.2	237	10.0	—	**301 R4**	**BN80B4**	**M2SA4**	6740	6740	18000	20700	4430	256
6.1	1037	1.8	231	12.0	—	**303 R4**	**BN80B4**	**M2SA4**	20500	23700	36500	43900	13200	266
6.3	1026	1.7	221	7.5	**301 L3**	—	**BN80B4**	**M2SA4**	6580	6580	17600	20300	4320	254
6.4	1023	2.2	220	7.5	**303 L3**	—	**BN80B4**	**M2SA4**	20200	23300	36000	43300	13000	264
6.5	965	0.9	215	10.0	—	**300 R4**	**BN80B4**	**M2SA4**	6370	6370	17100	19700	4190	246
6.5	965	1.9	215	10.0	—	**301 R4**	**BN80B4**	**M2SA4**	6520	6520	17500	20100	4280	256
6.5	962	2.8	214	12.0	—	**303 R4**	**BN80B4**	**M2SA4**	20000	23100	35700	42900	12800	266
6.9	936	2.6	202	7.5	**304 L3**	—	**BN80B4**	**M2SA4**	19600	22600	35000	42100	12600	288
7.3	891	1.5	192	7.5	**301 L3**	—	**BN80B4**	**M2SA4**	6280	6280	16900	19400	4130	254
7.4	883	2.1	190	7.5	**303 L3**	—	**BN80B4**	**M2SA4**	19200	22200	34400	41400	12300	264
7.6	830	2.8	185	12.0	—	**303 R4**	**BN80B4**	**M2SA4**	19100	22000	34100	41100	12200	266
7.9	824	2.7	178	7.5	**303 L3**	—	**BN80B4**	**M2SA4**	18800	21700	33700	40600	12100	264
7.9	822	1.1	177	7.5	**300 L3**	—	**BN80B4**	**M2SA4**	6110	6110	16500	19000	4020	244
7.9	822	2.2	177	7.5	**301 L3**	—	**BN80B4**	**M2SA4**	6110	6110	16500	19000	4020	254
8.0	787	1.1	175	10.0	—	**300 R4**	**BN80B4**	**M2SA4**	6090	6090	16500	18900	4000	246
8.0	787	2.2	175	10.0	—	**301 R4**	**BN80B4**	**M2SA4**	6090	6090	16500	18900	4000	256
8.6	760	2.9	164	7.5	**303 L3**	—	**BN80B4**	**M2SA4**	18300	21100	32900	39600	11700	264
8.8	713	1.2	159	10.0	—	**300 R4**	**BN80B4**	**M2SA4**	5890	5890	16000	18300	3870	246
8.8	713	2.4	159	10.0	—	**301 R4**	**BN80B4**	**M2SA4**	5890	5890	16000	18300	3870	256
9.2	708	2.6	152	7.5	**303 L3**	—	**BN80B4**	**M2SA4**	17900	20600	32200	38700	11500	264
9.8	643	1.0	143	10.0	—	**300 R4**	**BN80B4**	**M2SA4**	5690	5690	15500	17800	3740	246
9.8	643	2.0	143	10.0	—	**301 R4**	**BN80B4**	**M2SA4**	5690	5690	15500	17800	3740	256
9.9	659	1.3	142	7.5	**300 L3**	—	**BN80B4**	**M2SA4**	5670	5670	15400	17700	3730	244
9.9	659	2.6	142	7.5	**301 L3**	—	**BN80B4**	**M2SA4**	5670	5670	15400	17700	3730	254
10.5	617	1.9	133	12.0	—	**301 R3**	**BN80B4**	**M2SA4**	5550	5550	15100	17400	3650	256
10.7	607	1.4	131	7.5	**300 L3**	—	**BN80B4**	**M2SA4**	5520	5520	15100	17300	3630	244
10.7	607	2.8	131	7.5	**301 L3**	—	**BN80B4**	**M2SA4**	5520	5520	15100	17300	3630	254
10.8	582	1.5	130	10.0	—	**300 R4**	**BN80B4**	**M2SA4**	5510	5510	15000	17300	3620	246
10.8	582	3.0	130	10.0	—	**301 R4**	**BN80B4**	**M2SA4**	5510	5510	15000	17300	3620	256
12.1	538	1.2	116	7.5	**300 L3**	—	**BN80B4**	**M2SA4**	5300	5300	14500	16700	3490	244
12.1	538	2.4	116	7.5	**301 L3**	—	**BN80B4**	**M2SA4**	5300	5300	14500	16700	3490	254
13.2	494	1.3	106	12.0	—	**300 R3**	**BN80B4**	**M2SA4**	5160	5160	14200	16300	3390	246
13.2	494	2.6	106	12.0	—	**301 R3**	**BN80B4**	**M2SA4**	5160	5160	14200	16300	3390	256
13.2	475	1.8	106	10.0	—	**300 R4**	**BN80B4**	**M2SA4**	5150	5150	14100	16200	3380	246
13.4	487	1.8	105	7.5	**300 L3**	—	**BN80B4**	**M2SA4**	5130	5130	14100	16200	3370	244
16.4	397	2.1	85.6	7.5	**300 L3**	—	**BN80B4**	**M2SA4**	4790	4790	13300	15200	3150	244
16.4	395	1.6	85.2	12.0	—	**300 R3**	**BN80B4**	**M2SA4**	4790	4790	13200	15200	3150	246
17.8	365	2.3	78.7	12.0	—	**300 R3**	**BN80B4**	**M2SA4**	4660	4660	12900	14900	3060	246
18.1	360	2.4	77.5	7.5	**300 L3**	—	**BN80B4**	**M2SA4**	4640	4640	12900	14800	3050	244

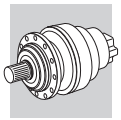

P_1 = 0.75 kW

n_2 min^{-1}	M_{n2} Nm	f_S	i	P_t kW					Rn_2 [N] MC	MZ	HC/PC	HZ/PZ	FZ	
20.0	324	2.0	69.9	7.5	**300 L3**	**—**	**BN80B4**	**M2SA4**	4480	4480	12500	14300	2950	244
20.5	317	2.1	68.2	12.0	**—**	**300 R3**	**BN80B4**	**M2SA4**	4440	4440	12400	14200	2920	246
21.6	311	1.8	64.8	7.5	**300 L2**	**—**	**BN80B4**	**M2SA4**	4370	4370	12200	14000	2870	244
22.1	294	2.9	63.2	7.5	**300 L3**	**—**	**BN80B4**	**M2SA4**	4330	4330	12100	13900	2850	244
22.2	292	2.9	62.9	12.0	**—**	**300 R3**	**BN80B4**	**M2SA4**	4330	4330	12100	13900	2840	246
27.0	249	2.6	51.9	7.5	**300 L2**	**—**	**BN80B4**	**M2SA4**	4060	4060	11400	13100	2670	244

P_1 = 1.1 kW

n_2 min^{-1}	M_{n2} Nm	f_S	i	P_t kW					Rn_2 [N] MC	MZ	HC/PC	HZ/PZ	FZ	
0.55	16877	1.5	2523	11.0	**310 L4**	**—**	**BN90S4**	**—**	—	—	133000	166000	65000	336
0.57	16202	1.0	2423	7.5	**309 L4**	**—**	**BN90S4**	**—**	—	—	110000	145000	36000	324
0.66	14021	2.4	2096	11.0	**311 L4**	**—**	**BN90S4**	**—**	—	—	157000	195000	65000	348
0.68	13652	1.0	2041	7.5	**307 L4**	**—**	**BN90S4**	**M2SB4**	52000	65000	109000	145000	45000	312
0.69	13523	1.9	2022	11.0	**310 L4**	**—**	**BN90S4**	**—**	—	—	133000	166000	65000	336
0.69	13394	1.3	2003	7.5	**309 L4**	**—**	**BN90S4**	**—**	—	—	110000	145000	36000	324
0.77	12001	2.2	1794	11.0	**310 L4**	**—**	**BN90S4**	**—**	—	—	133000	166000	65000	336
0.79	11820	1.3	1767	7.5	**307 L4**	**—**	**BN90S4**	**M2SB4**	52000	65000	109000	145000	45000	312
0.81	11521	1.5	1723	7.5	**309 L4**	**—**	**BN90S4**	**—**	—	—	110000	145000	36000	324
0.83	11179	2.3	1672	11.0	**310 L4**	**—**	**BN90S4**	**—**	—	—	133000	166000	65000	336
0.87	10732	1.6	1605	7.5	**309 L4**	**—**	**BN90S4**	**—**	—	—	110000	145000	36000	324
0.87	10638	1.4	1591	7.5	**307 L4**	**—**	**BN90S4**	**M2SB4**	52000	65000	109000	145000	45000	312
0.94	9862	1.0	1475	6.0	**306 L4**	**—**	**BN90S4**	**M2SB4**	45000	51000	101000	119000	35000	300
0.97	9616	2.7	1438	11.0	**310 L4**	**—**	**BN90S4**	**—**	—	—	133000	166000	65000	336
0.99	9419	1.7	1408	7.5	**307 L4**	**—**	**BN90S4**	**M2SB4**	51900	65000	109000	144700	45000	312
1.0	9232	1.8	1380	7.5	**309 L4**	**—**	**BN90S4**	**—**	—	—	110000	143800	35800	324
1.1	8599	1.9	1286	7.5	**309 L4**	**—**	**BN90S4**	**—**	—	—	109200	140800	35000	324
1.1	8557	1.0	1279	6.0	**306 L4**	**—**	**BN90S4**	**M2SB4**	45000	51000	99700	116100	34000	300
1.1	8524	1.4	1274	7.5	**307 L4**	**—**	**BN90S4**	**M2SB4**	50200	63000	107100	140400	43600	312
1.2	7736	1.8	1157	7.5	**307 L4**	**—**	**BN90S4**	**M2SB4**	48600	60900	104100	136400	42200	312
1.2	7687	2.1	1149	7.5	**309 L4**	**—**	**BN90S4**	**—**	—	—	105500	136100	33700	324
1.3	7320	1.1	1095	6.0	**306 L4**	**—**	**BN90S4**	**M2SB4**	42900	48600	95200	110800	32200	300
1.4	6788	1.4	1015	6.0	**306 L4**	**—**	**BN90S4**	**M2SB4**	41900	47400	93000	108300	31400	300
1.4	6682	2.1	999	7.5	**307 L4**	**—**	**BN90S4**	**M2SB4**	46300	58000	99600	130500	40200	312
1.4	6682	2.7	999	7.5	**309 L4**	**—**	**BN90S4**	**—**	—	—	101200	130500	32200	324
1.5	6061	2.5	906	7.5	**307 L4**	**—**	**BN90S4**	**M2SB4**	44800	56200	96700	126800	38900	312
1.5	6061	3.0	906	7.5	**309 L4**	**—**	**BN90S4**	**—**	—	—	98300	126800	31100	324
1.6	5866	1.3	877	6.0	**306 L4**	**—**	**BN90S4**	**M2SB4**	39900	45200	89000	103700	29900	300
1.7	5553	1.1	830	12.0	**—**	**306 R4**	**BN90S4**	**M2SB4**	39100	44300	87600	102000	29400	302
1.7	5458	1.0	816	6.0	**305 L4**	**—**	**BN90S4**	**M2SB4**	31300	36100	53300	64100	20000	288
1.7	5409	1.4	809	6.0	**306 L4**	**—**	**BN90S4**	**M2SB4**	38800	44000	86900	101200	29200	300
1.7	5354	2.5	801	7.5	**307 L4**	**—**	**BN90S4**	**M2SB4**	43000	53900	93200	122100	37400	312
2.0	4679	2.0	700	6.0	**306 L4**	**—**	**BN90S4**	**M2SB4**	37000	41900	83200	96900	27800	300
2.0	4613	2.1	690	15.0	**—**	**307 R4**	**BN90S4**	**M2SB4**	40900	51300	89100	116800	35500	314
2.1	4449	1.4	665	12.0	**—**	**306 R4**	**BN90S4**	**M2SB4**	36400	41200	82000	95400	27300	302
2.1	4407	0.9	659	12.0	**—**	**305 R4**	**BN90S4**	**M2SB4**	29100	33600	50000	60100	18700	278
2.1	4371	3.0	654	7.5	**307 L4**	**—**	**BN90S4**	**M2SB4**	40200	50400	87700	114900	34900	312
2.1	4344	1.0	649	6.0	**305 L4**	**—**	**BN90S4**	**M2SB4**	29000	33400	49700	59800	18600	288
2.2	4250	2.2	636	6.0	**306 L4**	**—**	**BN90S4**	**M2SB4**	35800	40600	80800	94100	26900	300
2.4	3949	2.1	590	12.0	**—**	**306 R4**	**BN90S4**	**M2SB4**	34900	39600	79100	92100	26200	302
2.4	3941	2.4	589	6.0	**306 L4**	**—**	**BN90S4**	**M2SB4**	34900	39600	79000	92000	26200	300
2.5	3791	1.3	567	12.0	**—**	**305 R4**	**BN90S4**	**M2SB4**	27700	32000	47700	57400	17800	278
2.5	3719	1.0	556	6.0	**304 L4**	**—**	**BN90S4**	**M2SB4**	27500	31700	47500	57100	17600	288
2.5	3719	1.5	556	6.0	**305 L4**	**—**	**BN90S4**	**M2SB4**	27500	31700	47500	57100	17600	288
2.5	3678	2.0	550	12.0	**—**	**306 R4**	**BN90S4**	**M2SB4**	34100	38700	77400	90100	25600	302
2.6	3531	1.1	528	12.0	**—**	**305 R4**	**BN90S4**	**M2SB4**	27000	31200	46700	56200	17300	278
2.7	3406	2.8	509	6.0	**306 L4**	**—**	**BN90S4**	**M2SB4**	33300	37700	75600	88100	25000	300
2.8	3292	1.1	492	6.0	**304 L4**	**—**	**BN90S4**	**M2SB4**	26400	30500	45800	55100	16900	288
2.8	3292	1.6	492	6.0	**305 L4**	**—**	**BN90S4**	**M2SB4**	26400	30500	45800	55100	16900	288
2.8	3280	2.8	490	15.0	**—**	**307 R4**	**BN90S4**	**M2SB4**	36500	45800	80500	105400	31700	314
2.8	3264	2.8	488	12.0	**—**	**306 R4**	**BN90S4**	**M2SB4**	32800	37100	74700	87000	24600	302

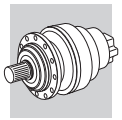

A

P_1 = 1.1 kW

n_2	M_{n2}	f_S	i	P_t					Rn_2 [N]					
min^{-1}	Nm			kW					MC	MZ	HC/PC	HZ/PZ	FZ	
3.1	3041	2.3	455	12.0	—	**306 R4**	**BN90S4**	**M2SB4**	32000	36300	73100	85100	24100	302
3.1	3021	1.2	452	12.0	—	**304 R4**	**BN90S4**	**M2SB4**	25700	29600	44600	53700	16500	278
3.1	3021	1.6	452	12.0	—	**305 R4**	**BN90S4**	**M2SB4**	25700	29600	44600	53700	16500	278
3.1	2980	0.9	446	6.0	**303 L4**	—	**BN90S4**	**M2SB4**	25500	29500	44400	53400	16400	264
3.1	2980	1.2	446	6.0	**304 L4**	—	**BN90S4**	**M2SB4**	25500	29500	44400	53400	16400	288
3.1	2980	1.8	446	6.0	**305 L4**	—	**BN90S4**	**M2SB4**	25500	29500	44400	53400	16400	288
3.4	2764	1.1	413	6.0	**304 L4**	—	**BN90S4**	**M2SB4**	24900	28800	43400	52200	16000	288
3.4	2764	1.7	413	6.0	**305 L4**	—	**BN90S4**	**M2SB4**	24900	28800	43400	52200	16000	288
3.4	2801	2.0	405	7.5	**306 L3**	—	**BN90S4**	**M2SB4**	30800	34900	70600	82200	23100	300
3.5	2779	1.4	402	7.5	**305 L3**	—	**BN90S4**	**M2SB4**	24700	28500	43100	51800	15800	288
3.6	2614	2.6	391	6.0	**306 L4**	—	**BN90S4**	**M2SB4**	30400	34500	69900	81400	22900	300
3.6	2609	1.4	390	12.0	—	**305 R4**	**BN90S4**	**M2SB4**	24400	28200	42700	51400	15700	278
3.6	2601	2.9	389	12.0	—	**306 R4**	**BN90S4**	**M2SB4**	30400	34400	69800	81200	22800	302
3.6	2689	1.2	389	7.5	**305 L3**	—	**BN90S4**	**M2SB4**	24400	28200	42600	51300	15700	288
3.8	2434	0.9	364	12.0	—	**303 R4**	**BN90S4**	**M2SB4**	23900	27600	41800	50300	15300	266
3.8	2434	1.2	364	12.0	—	**304 R4**	**BN90S4**	**M2SB4**	23900	27600	41800	50300	15300	278
3.8	2434	1.9	364	12.0	—	**305 R4**	**BN90S4**	**M2SB4**	23900	27600	41800	50300	15300	278
4.1	2360	1.0	341	7.5	**304 L3**	—	**BN90S4**	**M2SB4**	23400	27000	41000	49300	15000	288
4.1	2257	1.1	338	12.0	—	**304 R4**	**BN90S4**	**M2SB4**	23300	26900	40900	49200	14900	278
4.1	2244	1.0	336	12.0	—	**303 R4**	**BN90S4**	**M2SB4**	23200	26800	40800	49100	14900	266
4.1	2244	2.0	336	12.0	—	**305 R4**	**BN90S4**	**M2SB4**	23200	26800	40800	49100	14900	278
4.3	2244	2.5	325	7.5	**306 L3**	—	**BN90S4**	**M2SB4**	28600	32400	66100	76900	21500	300
4.3	2223	1.6	321	7.5	**305 L3**	—	**BN90S4**	**M2SB4**	22900	26400	40300	48500	14700	288
4.4	2091	1.7	313	12.0	—	**305 R4**	**BN90S4**	**M2SB4**	22700	26200	39900	48100	14600	278
4.5	2050	1.7	307	12.0	—	**304 R4**	**BN90S4**	**M2SB4**	22500	26000	39700	47800	14500	278
4.8	1945	1.0	291	10.0	—	**301 R4**	**BN90S4**	**M2SB4**	7210	7210	19100	22000	4740	256
4.8	1939	1.4	290	12.0	—	**303 R4**	**BN90S4**	**M2SB4**	22100	25600	39100	47000	14200	266
4.8	1939	1.9	290	12.0	—	**304 R4**	**BN90S4**	**M2SB4**	22100	25600	39100	47000	14200	278
4.8	1939	2.7	290	12.0	—	**305 R4**	**BN90S4**	**M2SB4**	22100	25600	39100	47000	14200	278
4.8	1992	2.8	288	7.5	**306 L3**	—	**BN90S4**	**M2SB4**	27500	31200	63700	74200	20700	300
5.0	1912	1.2	276	7.5	**303 L3**	—	**BN90S4**	**M2SB4**	21800	25200	38500	46300	14000	264
5.0	1912	2.3	276	7.5	**305 L3**	—	**BN90S4**	**M2SB4**	21800	25200	38500	46300	14000	288
5.1	1888	1.3	273	7.5	**304 L3**	—	**BN90S4**	**M2SB4**	21700	25000	38300	46100	13900	288
5.2	1855	3.0	268	7.5	**306 L3**	—	**BN90S4**	**M2SB4**	26900	30400	62400	72700	20200	300
5.2	1794	1.0	268	10.0	—	**301 R4**	**BN90S4**	**M2SB4**	7020	7020	18700	21500	4610	256
5.2	1789	2.0	267	12.0	—	**304 R4**	**BN90S4**	**M2SB4**	21500	24900	38100	45900	13800	278
5.4	1781	1.0	258	7.5	**303 L3**	—	**BN90S4**	**M2SB4**	21300	24600	37700	45300	13600	264
5.4	1781	2.0	258	7.5	**305 L3**	—	**BN90S4**	**M2SB4**	21300	24600	37700	45300	13600	288
5.4	1707	1.1	255	12.0	—	**303 R4**	**BN90S4**	**M2SB4**	21200	24500	37600	45200	13600	266
5.4	1707	2.1	255	12.0	—	**305 R4**	**BN90S4**	**M2SB4**	21200	24500	37600	45200	13600	278
6.0	1545	1.2	231	12.0	—	**303 R4**	**BN90S4**	**M2SB4**	20500	23700	36500	43900	13200	266
6.0	1545	2.3	231	12.0	—	**305 R4**	**BN90S4**	**M2SB4**	20500	23700	36500	43900	13200	278
6.1	1515	2.3	227	12.0	—	**304 R4**	**BN90S4**	**M2SB4**	20400	23500	36300	43600	13100	278
6.3	1528	1.2	221	7.5	**301 L3**	—	**BN90S4**	**M2SB4**	6580	6580	17600	20300	4320	254
6.3	1524	1.5	220	7.5	**303 L3**	—	**BN90S4**	**M2SB4**	20200	23300	36000	43300	13000	264
6.3	1524	2.4	220	7.5	**304 L3**	—	**BN90S4**	**M2SB4**	20200	23300	36000	43300	13000	288
6.5	1438	1.3	215	10.0	—	**301 R4**	**BN90S4**	**M2SB4**	6520	6520	17500	20100	4280	256
6.5	1433	1.9	214	12.0	—	**303 R4**	**BN90S4**	**M2SB4**	20000	23100	35700	42900	12800	266
6.5	1433	2.5	214	12.0	—	**304 R4**	**BN90S4**	**M2SB4**	20000	23100	35700	42900	12800	278
6.9	1395	1.7	202	7.5	**304 L3**	—	**BN90S4**	**M2SB4**	19600	22600	35000	42100	12600	288
7.2	1328	1.0	192	7.5	**301 L3**	—	**BN90S4**	**M2SB4**	6280	6280	16900	19400	4130	254
7.3	1316	1.4	190	7.5	**303 L3**	—	**BN90S4**	**M2SB4**	19200	22200	34400	41400	12300	264
7.3	1316	2.7	190	7.5	**305 L3**	—	**BN90S4**	**M2SB4**	19200	22200	34400	41400	12300	288
7.5	1237	1.9	185	12.0	—	**303 R4**	**BN90S4**	**M2SB4**	19100	22000	34100	41100	12200	266
7.5	1237	2.8	185	12.0	—	**304 R4**	**BN90S4**	**M2SB4**	19100	22000	34100	41100	12200	278
7.8	1228	1.8	178	7.5	**303 L3**	—	**BN90S4**	**M2SB4**	18800	21700	33700	40600	12100	264
7.8	1228	2.3	178	7.5	**304 L3**	—	**BN90S4**	**M2SB4**	18800	21700	33700	40600	12100	288
7.8	1225	1.4	177	7.5	**301 L3**	—	**BN90S4**	**M2SB4**	6110	6110	16500	19000	4020	254
7.9	1173	1.5	175	10.0	—	**301 R4**	**BN90S4**	**M2SB4**	6090	6090	16500	18900	4000	256
8.4	1139	2.1	165	7.5	**304 L3**	—	**BN90S4**	**M2SB4**	18300	21200	33000	39600	11800	288
8.5	1132	1.9	164	7.5	**303 L3**	—	**BN90S4**	**M2SB4**	18300	21100	32900	39600	11700	264
8.8	1062	1.6	159	10.0	—	**301 R4**	**BN90S4**	**M2SB4**	5890	5890	16000	18300	3870	256
8.8	1059	2.5	158	12.0	—	**303 R4**	**BN90S4**	**M2SB4**	18100	20900	32600	39200	11600	266
9.1	1055	1.7	152	7.5	**303 L3**	—	**BN90S4**	**M2SB4**	17900	20600	32200	38700	11500	264
9.4	991	2.3	148	12.0	—	**303 R4**	**BN90S4**	**M2SB4**	17700	20400	31900	38400	11400	266

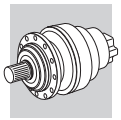

P_1 = 1.1 kW

n_2 min^{-1}	M_{n2} Nm	f_S	i	P_t kW					Rn_2 [N] MC	MZ	HC/PC	HZ/PZ	FZ	
9.7	958	1.4	143	10.0	—	**301 R4**	**BN90S4**	**M2SB4**	5690	5690	15500	17800	3740	256
9.8	981	1.8	142	7.5	**301 L3**	—	**BN90S4**	**M2SB4**	5670	5670	15400	17700	3730	254
9.8	978	2.7	141	7.5	**303 L3**	—	**BN90S4**	**M2SB4**	17400	20100	31500	37900	11200	264
10.5	919	1.3	133	12.0	—	**301 R3**	**BN90S4**	**M2SB4**	5550	5550	15100	17400	3650	256
10.6	905	1.0	131	7.5	**300 L3**	—	**BN90S4**	**M2SB4**	5520	5520	15100	17300	3630	244
10.6	905	1.9	131	7.5	**301 L3**	—	**BN90S4**	**M2SB4**	5520	5520	15100	17300	3630	254
10.7	867	1.0	130	10.0	—	**300 R4**	**BN90S4**	**M2SB4**	5510	5510	15000	17300	3620	246
10.7	867	2.0	130	10.0	—	**301 R4**	**BN90S4**	**M2SB4**	5510	5510	15000	17300	3620	256
11.2	861	2.1	124	7.5	**303 L3**	—	**BN90S4**	**M2SB4**	16700	19300	30300	36500	10700	264
11.5	839	2.9	121	14.0	—	**304 R3**	**BN90S4**	**M2SB4**	16600	19100	30100	36200	10600	278
12.0	801	1.6	116	7.5	**301 L3**	—	**BN90S4**	**M2SB4**	5300	5300	14500	16700	3490	254
12.2	791	2.3	114	14.0	—	**303 R3**	**BN90S4**	**M2SB4**	16200	18700	29500	35500	10400	266
12.3	779	2.3	113	7.5	**303 L3**	—	**BN90S4**	**M2SB4**	16200	18600	29400	35400	10400	264
13.1	736	1.8	106	12.0	—	**301 R3**	**BN90S4**	**M2SB4**	5160	5160	14200	16300	3390	256
13.1	708	1.2	106	10.0	—	**300 R4**	**BN90S4**	**M2SB4**	5150	5150	14100	16200	3380	246
13.1	708	2.4	106	10.0	—	**301 R4**	**BN90S4**	**M2SB4**	5150	5150	14100	16200	3380	256
13.3	725	1.2	105	7.5	**300 L3**	—	**BN90S4**	**M2SB4**	5130	5130	14100	16200	3370	244
13.3	725	2.3	105	7.5	**301 L3**	—	**BN90S4**	**M2SB4**	5130	5130	14100	16200	3370	254
15.2	633	2.9	91.5	14.0	—	**303 R3**	**BN90S4**	**M2SB4**	15100	17400	27600	33200	9670	266
16.2	592	1.4	85.6	7.5	**300 L3**	—	**BN90S4**	**M2SB4**	4790	4790	13300	15200	3150	244
16.2	592	2.8	85.6	7.5	**301 L3**	—	**BN90S4**	**M2SB4**	4790	4790	13300	15200	3150	254
16.3	589	1.1	85.2	12.0	—	**300 R3**	**BN90S4**	**M2SB4**	4790	4790	13200	15200	3150	246
16.3	589	2.2	85.2	12.0	—	**301 R3**	**BN90S4**	**M2SB4**	4790	4790	13200	15200	3150	256
17.7	544	1.6	78.7	12.0	—	**300 R3**	**BN90S4**	**M2SB4**	4660	4660	12900	14900	3060	246
17.7	544	2.9	78.7	12.0	—	**301 R3**	**BN90S4**	**M2SB4**	4660	4660	12900	14900	3060	256
17.9	536	1.6	77.5	7.5	**300 L3**	—	**BN90S4**	**M2SB4**	4640	4640	12900	14800	3050	244
19.9	483	1.3	69.9	7.5	**300 L3**	—	**BN90S4**	**M2SB4**	4480	4480	12500	14300	2950	244
19.9	483	2.7	69.9	7.5	**301 L3**	—	**BN90S4**	**M2SB4**	4480	4480	12500	14300	2950	254
20.4	472	1.4	68.2	12.0	—	**300 R3**	**BN90S4**	**M2SB4**	4440	4440	12400	14200	2920	246
20.4	472	2.8	68.2	12.0	—	**301 R3**	**BN90S4**	**M2SB4**	4440	4440	12400	14200	2920	256
21.5	463	1.2	64.8	7.5	**300 L2**	—	**BN90S4**	**M2SB4**	4370	4370	12200	14000	2870	244
21.5	463	2.5	64.8	7.5	**301 L2**	—	**BN90S4**	**M2SB4**	4370	4370	12200	14000	2870	254
22.0	437	1.9	63.2	7.5	**300 L3**	—	**BN90S4**	**M2SB4**	4330	4330	12100	13900	2850	244
22.1	435	2.0	62.9	12.0	—	**300 R3**	**BN90S4**	**M2SB4**	4330	4330	12100	13900	2840	246
26.8	371	1.8	51.9	7.5	**300 L2**	—	**BN90S4**	**M2SB4**	4060	4060	11400	13100	2670	244
26.9	357	2.4	51.6	7.5	**300 L3**	—	**BN90S4**	**M2SB4**	4050	4050	11400	13100	2660	244
27.6	349	2.4	50.4	12.0	—	**300 R3**	**BN90S4**	**M2SB4**	4020	4020	11300	13000	2640	246
33	297	2.2	41.5	7.5	**300 L2**	—	**BN90S4**	**M2SB4**	3770	3770	10700	12300	2480	244
34	285	2.3	41.2	12.0	—	**300 R3**	**BN90S4**	**M2SB4**	3760	3760	10600	12200	2470	246
42	238	2.7	33.3	7.5	**300 L2**	—	**BN90S4**	**M2SB4**	3500	3500	9990	11500	2300	244
75	132	2.8	18.5	12.0	—	**300 R2**	**BN90S4**	**M2SB4**	2870	2870	8370	9620	1890	246

P_1 = 1.5 kW

n_2 min^{-1}	M_{n2} Nm	f_S	i	P_t kW					Rn_2 [N] MC	MZ	HC/PC	HZ/PZ	FZ	
0.56	22651	1.1	2523	11.0	**310 L4**	—	**BN90LA4**	—	—	—	133000	166000	65000	336
0.64	19631	2.5	2187	11.0	**313 L4**	—	**BN90LA4**	—	—	—	192000	231000	80000	360
0.67	18817	1.8	2096	11.0	**311 L4**	—	**BN90LA4**	—	—	—	157000	195000	65000	348
0.70	18150	1.4	2022	11.0	**310 L4**	—	**BN90LA4**	—	—	—	133000	166000	65000	336
0.70	17976	0.9	2003	7.5	**309 L4**	—	**BN90LA4**	—	—	—	110000	145000	36000	324
0.79	16107	1.6	1794	11.0	**310 L4**	—	**BN90LA4**	—	—	—	133000	166000	65000	336
0.80	15863	1.0	1767	7.5	**307 L4**	—	**BN90LA4**	**M3SA4**	52000	65000	109000	145000	45000	312
0.80	15855	2.7	1766	11.0	**311 L4**	—	**BN90LA4**	—	—	—	157000	195000	65000	348
0.82	15463	1.1	1723	7.5	**309 L4**	—	**BN90LA4**	—	—	—	110000	145000	36000	324
0.84	15078	2.3	1680	11.0	**311 L4**	—	**BN90LA4**	—	—	—	157000	195000	65000	348
0.84	15004	1.7	1672	11.0	**310 L4**	—	**BN90LA4**	—	—	—	133000	166000	65000	336
0.88	14403	1.2	1605	7.5	**309 L4**	—	**BN90LA4**	—	—	—	110000	145000	36000	324
0.89	14277	1.1	1591	7.5	**307 L4**	—	**BN90LA4**	**M3SA4**	52000	65000	109000	145000	45000	312
0.98	12906	2.0	1438	11.0	**310 L4**	—	**BN90LA4**	—	—	—	133000	166000	65000	336
1.0	12641	1.2	1408	7.5	**307 L4**	—	**BN90LA4**	**M3SA4**	51900	65000	109000	144700	45000	312
1.0	12390	1.3	1380	7.5	**309 L4**	—	**BN90LA4**	—	—	—	110000	143800	35800	324

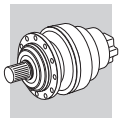

P_1 = 1.5 kW

n_2	M_{n2}	f_S	i	P_t					Rn_2 [N]					
min^{-1}	Nm			kW					MC	MZ	HC/PC	HZ/PZ	FZ	
1.1	11541	1.4	1286	7.5	**309 L4**	—	**BN90LA4**	—	—	—	109200	140800	35000	324
1.1	11440	1.1	1274	7.5	**307 L4**	—	**BN90LA4**	**M3SA4**	50200	63000	107100	140400	43600	312
1.1	11300	2.4	1259	11.0	**310 L4**	—	**BN90LA4**	—	—	—	128500	161600	62700	336
1.2	10451	2.8	1164	11.0	**310 L4**	—	**BN90LA4**	—	—	—	125500	157900	61100	336
1.2	10382	1.4	1157	7.5	**307 L4**	—	**BN90LA4**	**M3SA4**	48600	60900	104100	136400	42200	312
1.2	10317	1.6	1149	7.5	**309 L4**	—	**BN90LA4**	—	—	—	105500	136100	33700	324
1.4	9110	1.0	1015	6.0	**306 L4**	—	**BN90LA4**	**M3SA4**	41900	47400	93000	108300	31400	300
1.4	8968	1.5	999	7.5	**307 L4**	—	**BN90LA4**	**M3SA4**	46300	58000	99600	130500	40200	312
1.4	8968	2.0	999	7.5	**309 L4**	—	**BN90LA4**	—	—	—	101200	130500	32200	324
1.6	8135	1.9	906	7.5	**307 L4**	—	**BN90LA4**	**M3SA4**	44800	56200	96700	126800	38900	312
1.6	8135	2.2	906	7.5	**309 L4**	—	**BN90LA4**	—	—	—	98300	126800	31100	324
1.6	8061	2.9	898	15.0	—	**310 R4**	**BN90LA4**	—	—	—	116100	146000	56100	338
1.6	7872	1.0	877	6.0	**306 L4**	—	**BN90LA4**	**M3SA4**	39900	45200	89000	103700	29900	300
1.7	7260	1.1	809	6.0	**306 L4**	—	**BN90LA4**	**M3SA4**	38800	44000	86900	101200	29200	300
1.8	7186	1.9	801	7.5	**307 L4**	—	**BN90LA4**	**M3SA4**	43000	53900	93200	122100	37400	312
1.8	7186	2.5	801	7.5	**309 L4**	—	**BN90LA4**	—	—	—	94700	122100	29900	324
2.0	6482	2.3	722	7.5	**307 L4**	—	**BN90LA4**	**M3SA4**	41500	52100	90400	118400	36100	312
2.0	6280	1.5	700	6.0	**306 L4**	—	**BN90LA4**	**M3SA4**	37000	41900	83200	96900	27800	300
2.0	6191	1.6	690	15.0	—	**307 R4**	**BN90LA4**	**M3SA4**	40900	51300	89100	116800	35500	314
2.0	6191	2.4	690	15.0	—	**309 R4**	**BN90LA4**	—	—	—	90600	116800	28400	326
2.1	5971	1.0	665	12.0	—	**306 R4**	**BN90LA4**	**M3SA4**	36400	41200	82000	95400	27300	302
2.2	5866	2.2	654	7.5	**307 L4**	—	**BN90LA4**	**M3SA4**	40200	50400	87700	114900	34900	312
2.2	5705	1.7	636	6.0	**306 L4**	—	**BN90LA4**	**M3SA4**	35800	40600	80800	94100	26900	300
2.4	5299	1.6	590	12.0	—	**306 R4**	**BN90LA4**	**M3SA4**	34900	39600	79100	92100	26200	302
2.4	5290	1.8	589	6.0	**306 L4**	—	**BN90LA4**	**M3SA4**	34900	39600	79000	92000	26200	300
2.4	5217	2.4	581	15.0	—	**307 R4**	**BN90LA4**	**M3SA4**	38600	48500	84700	110900	33600	314
2.4	5194	2.9	579	7.5	**307 L4**	—	**BN90LA4**	**M3SA4**	38600	48400	84500	110800	33500	312
2.5	5087	1.0	567	12.0	—	**305 R4**	**BN90LA4**	**M3SA4**	27700	32000	47700	57400	17800	278
2.5	4992	1.1	556	6.0	**305 L4**	—	**BN90LA4**	**M3SA4**	27500	31700	47500	57100	17600	288
2.6	4936	1.5	550	12.0	—	**306 R4**	**BN90LA4**	**M3SA4**	34100	38700	77400	90100	25600	302
2.8	4571	2.1	509	6.0	**306 L4**	—	**BN90LA4**	**M3SA4**	33300	37700	75600	88100	25000	300
2.9	4419	1.2	492	6.0	**305 L4**	—	**BN90LA4**	**M3SA4**	26400	30500	45800	55100	16900	288
2.9	4403	2.1	490	15.0	—	**307 R4**	**BN90LA4**	**M3SA4**	36500	45800	80500	105400	31700	314
2.9	4381	2.1	488	12.0	—	**306 R4**	**BN90LA4**	**M3SA4**	32800	37100	74700	87000	24600	302
3.0	4172	2.9	465	7.5	**307 L4**	—	**BN90LA4**	**M3SA4**	35800	45000	79200	103700	31200	312
3.1	4081	1.7	455	12.0	—	**306 R4**	**BN90LA4**	**M3SA4**	32000	36300	73100	85100	24100	302
3.1	4054	0.9	452	12.0	—	**304 R4**	**BN90LA4**	**M3SA4**	25700	29600	44600	53700	16500	278
3.1	4054	1.2	452	12.0	—	**305 R4**	**BN90LA4**	**M3SA4**	25700	29600	44600	53700	16500	278
3.2	4000	0.9	446	6.0	**304 L4**	—	**BN90LA4**	**M3SA4**	25500	29500	44400	53400	16400	288
3.2	4000	1.4	446	6.0	**305 L4**	—	**BN90LA4**	**M3SA4**	25500	29500	44400	53400	16400	288
3.2	3988	2.5	444	6.0	**306 L4**	—	**BN90LA4**	**M3SA4**	31800	36000	72600	84500	23900	300
3.4	3768	2.3	420	12.0	—	**306 R4**	**BN90LA4**	**M3SA4**	31200	35300	71400	83100	23400	302
3.4	3709	1.3	413	6.0	**305 L4**	—	**BN90LA4**	**M3SA4**	24900	28800	43400	52200	16000	288
3.5	3759	1.5	405	7.5	**306 L3**	—	**BN90LA4**	**M3SA4**	30800	34900	70600	82200	23100	300
3.5	3729	1.0	402	7.5	**305 L3**	—	**BN90LA4**	**M3SA4**	24700	28500	43100	51800	15800	288
3.6	3509	1.9	391	6.0	**306 L4**	—	**BN90LA4**	**M3SA4**	30400	34500	69900	81400	22900	300
3.6	3502	1.1	390	12.0	—	**305 R4**	**BN90LA4**	**M3SA4**	24400	28200	42700	51400	15700	278
3.6	3491	2.2	389	12.0	—	**306 R4**	**BN90LA4**	**M3SA4**	30400	34400	69800	81200	22800	302
3.9	3266	0.9	364	12.0	—	**304 R4**	**BN90LA4**	**M3SA4**	23300	26900	40900	49300	15000	278
3.9	3266	1.4	364	12.0	—	**305 R4**	**BN90LA4**	**M3SA4**	23900	27600	41800	50300	15300	278
4.2	3123	2.8	336	11.0	**307 L3**	—	**BN90LA4**	**M3SA4**	32200	40400	71900	94200	28000	312
4.2	3012	1.5	336	12.0	—	**305 R4**	**BN90LA4**	**M3SA4**	23200	26800	40800	49100	14900	278
4.3	3012	1.8	325	7.5	**306 L3**	—	**BN90LA4**	**M3SA4**	28600	32400	66100	76900	21500	300
4.4	2983	1.2	321	7.5	**305 L3**	—	**BN90LA4**	**M3SA4**	22900	26400	40300	48500	14700	288
4.5	2806	1.3	313	12.0	—	**305 R4**	**BN90LA4**	**M3SA4**	22700	26200	39900	48100	14600	278
4.5	2797	2.7	312	12.0	—	**306 R4**	**BN90LA4**	**M3SA4**	28200	32000	65300	76000	21200	302
4.6	2752	1.3	307	12.0	—	**304 R4**	**BN90LA4**	**M3SA4**	22500	26000	39700	47800	14500	278
4.9	2603	1.0	290	12.0	—	**303 R4**	**BN90LA4**	**M3SA4**	22100	25600	39100	47000	14200	266
4.9	2603	1.4	290	12.0	—	**304 R4**	**BN90LA4**	**M3SA4**	22100	25600	39100	47000	14200	278
4.9	2603	2.0	290	12.0	—	**305 R4**	**BN90LA4**	**M3SA4**	22100	25600	39100	47000	14200	278
4.9	2673	2.1	288	7.5	**306 L3**	—	**BN90LA4**	**M3SA4**	27500	31200	63700	74200	20700	300
5.1	2566	1.7	276	7.5	**305 L3**	—	**BN90LA4**	**M3SA4**	21800	25200	38500	46300	14000	288
5.2	2534	0.9	273	7.5	**304 L3**	—	**BN90LA4**	**M3SA4**	21700	25000	38300	46100	13900	288
5.3	2490	2.2	268	7.5	**306 L3**	—	**BN90LA4**	**M3SA4**	26900	30400	62400	72700	20200	300
5.3	2400	1.5	267	12.0	—	**304 R4**	**BN90LA4**	**M3SA4**	21500	24900	38100	45900	13800	278

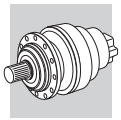

P_1 = 1.5 kW

n_2	M_{n2}	f_S	i	P_t					Rn_2 [N]					
min^{-1}	Nm			kW					MC	MZ	HC/PC	HZ/PZ	FZ	
5.5	2390	1.5	258	7.5	**305 L3**	**—**	**BN90LA4**	**M3SA4**	21300	24600	37700	45300	13600	288
5.5	2290	1.6	255	12.0	**—**	**305 R4**	**BN90LA4**	**M3SA4**	21200	24500	37600	45200	13600	278
6.1	2073	1.7	231	12.0	**—**	**305 R4**	**BN90LA4**	**M3SA4**	20500	23700	36500	43900	13200	278
6.2	2033	1.7	227	12.0	**—**	**304 R4**	**BN90LA4**	**M3SA4**	20400	23500	36300	43600	13100	278
6.4	2045	1.1	220	7.5	**303 L3**	**—**	**BN90LA4**	**M3SA4**	20200	23300	36000	43300	13000	264
6.4	2045	1.8	220	7.5	**304 L3**	**—**	**BN90LA4**	**M3SA4**	20200	23300	36000	43300	13000	288
6.4	2045	2.3	220	7.5	**305 L3**	**—**	**BN90LA4**	**M3SA4**	20200	23300	36000	43300	13000	288
6.6	1929	0.9	215	10.0	**—**	**301 R4**	**BN90LA4**	**M3SA4**	6520	6520	17500	20100	4280	256
6.6	1923	1.4	214	12.0	**—**	**303 R4**	**BN90LA4**	**M3SA4**	20000	23100	35700	42900	12800	266
6.6	1923	1.9	214	12.0	**—**	**304 R4**	**BN90LA4**	**M3SA4**	20000	23100	35700	42900	12800	278
6.6	1923	2.8	214	12.0	**—**	**305 R4**	**BN90LA4**	**M3SA4**	19600	22600	34900	42000	12500	278
7.0	1872	1.3	202	7.5	**304 L3**	**—**	**BN90LA4**	**M3SA4**	19600	22600	35000	42100	12600	288
7.4	1766	1.0	190	7.5	**303 L3**	**—**	**BN90LA4**	**M3SA4**	19200	22200	34400	41400	12300	264
7.4	1766	2.0	190	7.5	**305 L3**	**—**	**BN90LA4**	**M3SA4**	19200	22200	34400	41400	12300	288
7.6	1660	1.4	185	12.0	**—**	**303 R4**	**BN90LA4**	**M3SA4**	19100	22000	34100	41100	12200	266
7.6	1660	2.1	185	12.0	**—**	**304 R4**	**BN90LA4**	**M3SA4**	19100	22000	34100	41100	12200	278
7.6	1660	2.7	185	12.0	**—**	**305 R4**	**BN90LA4**	**M3SA4**	19100	22000	34100	41100	12200	278
7.9	1648	1.3	178	7.5	**303 L3**	**—**	**BN90LA4**	**M3SA4**	18800	21700	33700	40600	12100	264
7.9	1648	1.7	178	7.5	**304 L3**	**—**	**BN90LA4**	**M3SA4**	18800	21700	33700	40600	12100	288
7.9	1648	2.7	178	7.5	**305 L3**	**—**	**BN90LA4**	**M3SA4**	18800	21700	33700	40600	12100	288
8.0	1644	1.1	177	7.5	**301 L3**	**—**	**BN90LA4**	**M3SA4**	6110	6110	16500	19000	4020	254
8.0	1575	1.1	175	10.0	**—**	**301 R4**	**BN90LA4**	**M3SA4**	6090	6090	16500	18900	4000	256
8.6	1528	1.6	165	7.5	**304 L3**	**—**	**BN90LA4**	**M3SA4**	18300	21200	33000	39600	11800	288
8.6	1520	1.4	164	7.5	**303 L3**	**—**	**BN90LA4**	**M3SA4**	18300	21100	32900	39600	11700	264
8.6	1520	2.9	164	7.5	**305 L3**	**—**	**BN90LA4**	**M3SA4**	18300	21100	32900	39600	11700	288
8.9	1426	1.2	159	10.0	**—**	**301 R4**	**BN90LA4**	**M3SA4**	5890	5890	16000	18300	3870	256
8.9	1421	1.9	158	12.0	**—**	**303 R4**	**BN90LA4**	**M3SA4**	18100	20900	32600	39200	11600	266
8.9	1421	2.5	158	12.0	**—**	**304 R4**	**BN90LA4**	**M3SA4**	18100	20900	32600	39200	11600	278
9.2	1415	1.3	152	7.5	**303 L3**	**—**	**BN90LA4**	**M3SA4**	17900	20600	32200	38700	11500	264
9.2	1415	2.5	152	7.5	**305 L3**	**—**	**BN90LA4**	**M3SA4**	17900	20600	32200	38700	11500	288
9.4	1388	2.5	150	7.5	**304 L3**	**—**	**BN90LA4**	**M3SA4**	17800	20500	32000	38500	11400	288
9.5	1330	2.6	148	12.0	**—**	**304 R4**	**BN90LA4**	**M3SA4**	17700	20400	31900	38400	11400	278
9.5	1330	1.7	148	12.0	**—**	**303 R4**	**BN90LA4**	**M3SA4**	17700	20400	31900	38400	11400	266
9.8	1286	1.0	143	10.0	**—**	**301 R4**	**BN90LA4**	**M3SA4**	5690	5690	15500	17800	3740	256
9.9	1317	1.3	142	7.5	**301 L3**	**—**	**BN90LA4**	**M3SA4**	5670	5670	15400	17700	3730	254
10.0	1313	2.0	141	7.5	**303 L3**	**—**	**BN90LA4**	**M3SA4**	17400	20100	31500	37900	11200	264
10.0	1313	2.7	141	7.5	**304 L3**	**—**	**BN90LA4**	**M3SA4**	17400	20100	31500	37900	11200	288
10.6	1233	0.9	133	12.0	**—**	**301 R3**	**BN90LA4**	**M3SA4**	5550	5550	15100	17400	3650	256
10.8	1215	1.4	131	7.5	**301 L3**	**—**	**BN90LA4**	**M3SA4**	5520	5520	15100	17300	3630	254
10.8	1211	2.9	130	7.5	**304 L3**	**—**	**BN90LA4**	**M3SA4**	17000	19600	30700	37000	10900	288
10.9	1164	1.5	130	10.0	**—**	**301 R4**	**BN90LA4**	**M3SA4**	5510	5510	15000	17300	3620	256
10.9	1160	2.3	129	12.0	**—**	**303 R4**	**BN90LA4**	**M3SA4**	16900	19500	30600	36900	10800	266
11.3	1155	1.6	124	7.5	**303 L3**	**—**	**BN90LA4**	**M3SA4**	16700	19300	30300	36500	10700	264
11.6	1125	2.1	121	14.0	**—**	**304 R3**	**BN90LA4**	**M3SA4**	16600	19100	30100	36200	10600	278
12.2	1075	1.2	116	7.5	**301 L3**	**—**	**BN90LA4**	**M3SA4**	5300	5300	14500	16700	3490	254
12.3	1062	1.7	114	14.0	**—**	**303 R3**	**BN90LA4**	**M3SA4**	16200	18700	29500	35500	10400	266
12.5	1046	1.7	113	7.5	**303 L3**	**—**	**BN90LA4**	**M3SA4**	16200	18600	29400	35400	10400	264
13.2	988	1.3	106	12.0	**—**	**301 R3**	**BN90LA4**	**M3SA4**	5160	5160	14200	16300	3390	256
13.3	950	0.9	106	10.0	**—**	**300 R4**	**BN90LA4**	**M3SA4**	5030	5030	13800	15900	3310	246
13.3	950	1.8	106	10.0	**—**	**301 R4**	**BN90LA4**	**M3SA4**	5150	5150	14100	16200	3380	256
13.4	973	1.7	105	7.5	**301 L3**	**—**	**BN90LA4**	**M3SA4**	5130	5130	14100	16200	3370	254
13.5	970	2.7	105	7.5	**303 L3**	**—**	**BN90LA4**	**M3SA4**	15800	18200	28800	34600	10100	264
14.5	900	2.7	97.0	14.0	**—**	**304 R3**	**BN90LA4**	**M3SA4**	15400	17700	28100	33800	9860	278
15.4	849	2.1	91.5	14.0	**—**	**303 R3**	**BN90LA4**	**M3SA4**	15100	17400	27600	33200	9670	266
15.6	837	2.7	90.2	7.5	**303 L3**	**—**	**BN90LA4**	**M3SA4**	15000	17300	27500	33100	9620	264
16.5	794	1.1	85.6	7.5	**300 L3**	**—**	**BN90LA4**	**M3SA4**	4790	4790	13300	15200	3150	244
16.5	794	2.1	85.6	7.5	**301 L3**	**—**	**BN90LA4**	**M3SA4**	4790	4790	13300	15200	3150	254
16.6	790	1.6	85.2	12.0	**—**	**301 R3**	**BN90LA4**	**M3SA4**	4790	4790	13200	15200	3150	256
17.9	731	3.0	78.7	14.0	**—**	**303 R3**	**BN90LA4**	**M3SA4**	14300	16500	26400	31800	9190	266
17.9	730	1.2	78.7	12.0	**—**	**300 R3**	**BN90LA4**	**M3SA4**	4660	4660	12900	14900	3060	246
17.9	730	2.2	78.7	12.0	**—**	**301 R3**	**BN90LA4**	**M3SA4**	4660	4660	12900	14900	3060	256
18.2	719	1.2	77.5	7.5	**300 L3**	**—**	**BN90LA4**	**M3SA4**	4640	4640	12900	14800	3050	244
18.2	719	2.3	77.5	7.5	**301 L3**	**—**	**BN90LA4**	**M3SA4**	4640	4640	12900	14800	3050	254
19.2	681	2.7	73.3	14.0	**—**	**303 R3**	**BN90LA4**	**M3SA4**	14000	16200	25900	31100	8980	266
20.2	649	1.0	69.9	7.5	**300 L3**	**—**	**BN90LA4**	**M3SA4**	4480	4480	12500	14300	2950	244

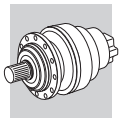

A

P_1 = 1.5 kW

n_2 min^{-1}	M_{n2} Nm	f_S	i	P_t kW					Rn_2 [N] MC	MZ	HC/PC	HZ/PZ	FZ	
20.2	649	2.0	69.9	7.5	**301 L3**	—	**BN90LA4**	**M3SA4**	4480	4480	12500	14300	2950	254
20.7	633	1.0	68.2	12.0	—	**300 R3**	**BN90LA4**	**M3SA4**	4440	4440	12400	14200	2920	246
20.7	633	2.1	68.2	12.0	—	**301 R3**	**BN90LA4**	**M3SA4**	4440	4440	12400	14200	2920	256
21.8	621	1.9	64.8	7.5	**301 L2**	—	**BN90LA4**	**M3SA4**	4370	4370	12200	14000	2870	254
22.3	587	1.4	63.2	7.5	**300 L3**	—	**BN90LA4**	**M3SA4**	4330	4330	12100	13900	2850	244
22.3	587	2.8	63.2	7.5	**301 L3**	—	**BN90LA4**	**M3SA4**	4330	4330	12100	13900	2850	254
22.4	584	1.5	62.9	12.0	—	**300 R3**	**BN90LA4**	**M3SA4**	4330	4330	12100	13900	2840	246
22.4	584	2.8	62.9	12.0	—	**301 R3**	**BN90LA4**	**M3SA4**	4330	4330	12100	13900	2840	256
27.2	498	1.3	51.9	7.5	**300 L2**	—	**BN90LA4**	**M3SA4**	4060	4060	11400	13100	2670	244
27.2	498	2.6	51.9	7.5	**301 L2**	—	**BN90LA4**	**M3SA4**	4060	4060	11400	13100	2670	254
27.3	479	1.8	51.6	7.5	**300 L3**	—	**BN90LA4**	**M3SA4**	4050	4050	11400	13100	2660	244
28.0	468	1.8	50.4	12.0	—	**300 R3**	**BN90LA4**	**M3SA4**	4020	4020	11300	13000	2640	246
34	398	1.6	41.5	7.5	**300 L2**	—	**BN90LA4**	**M3SA4**	3770	3770	10700	12300	2480	244
34	382	1.7	41.2	12.0	—	**300 R3**	**BN90LA4**	**M3SA4**	3760	3760	10600	12200	2470	246
37	368	2.3	38.4	7.5	**300 L2**	—	**BN90LA4**	**M3SA4**	3670	3670	10400	12000	2410	244
38	346	2.4	37.3	12.0	—	**300 R3**	**BN90LA4**	**M3SA4**	3630	3630	10300	11900	2390	246
42	319	2.0	33.3	7.5	**300 L2**	—	**BN90LA4**	**M3SA4**	3500	3500	9990	11500	2300	244
46	294	2.9	30.7	7.5	**300 L2**	—	**BN90LA4**	**M3SA4**	3410	3410	9750	11200	2240	244
46	282	3.0	30.4	12.0	—	**300 R3**	**BN90LA4**	**M3SA4**	3400	3400	9730	11200	2230	246
76	177	2.1	18.5	12.0	—	**300 R2**	**BN90LA4**	**M3SA4**	2870	2870	8370	9620	1890	246

P_1 = 1.85 kW

n_2 min^{-1}	M_{n2} Nm	f_S	i	P_t kW					Rn_2 [N] MC	MZ	HC/PC	HZ/PZ	FZ	
0.55	28202	0.9	2523	11.0	**310 L4**	—	**BN90LB4**	—	—	—	133000	166000	65000	336
0.64	24442	2.0	2187	11.0	**313 L4**	—	**BN90LB4**	—	—	—	192000	231000	80000	360
0.66	23430	1.5	2096	11.0	**311 L4**	—	**BN90LB4**	—	—	—	157000	195000	65000	348
0.69	22598	1.2	2022	11.0	**310 L4**	—	**BN90LB4**	—	—	—	133000	166000	65000	336
0.77	20306	2.9	1817	11.0	**313 L4**	—	**BN90LB4**	—	—	—	192000	231000	80000	360
0.77	20055	1.3	1794	11.0	**310 L4**	—	**BN90LB4**	—	—	—	133000	166000	65000	336
0.79	19742	2.2	1766	11.0	**311 L4**	—	**BN90LB4**	—	—	—	157000	195000	65000	348
0.83	18774	1.8	1680	11.0	**311 L4**	—	**BN90LB4**	—	—	—	157000	195000	65000	348
0.83	18681	1.4	1672	11.0	**310 L4**	—	**BN90LB4**	—	—	—	133000	166000	65000	336
0.87	17934	0.9	1605	7.5	**309 L4**	—	**BN90LB4**	—	—	—	110000	145000	36000	324
0.97	16070	1.6	1438	11.0	**310 L4**	—	**BN90LB4**	—	—	—	133000	166000	65000	336
0.98	15819	2.7	1415	11.0	**311 L4**	—	**BN90LB4**	—	—	—	157000	195000	65000	348
0.99	15739	1.0	1408	7.5	**307 L4**	—	**BN90LB4**	—	51900	65000	109000	144700	45000	312
1.0	15427	1.1	1380	7.5	**309 L4**	—	**BN90LB4**	—	—	—	110000	143800	35800	324
1.1	14370	1.1	1286	7.5	**309 L4**	—	**BN90LB4**	—	—	—	109200	140800	35000	324
1.1	14070	2.0	1259	11.0	**310 L4**	—	**BN90LB4**	—	—	—	128500	161600	62700	336
1.2	13012	2.3	1164	11.0	**310 L4**	—	**BN90LB4**	—	—	—	125500	157900	61100	336
1.2	12927	1.1	1157	7.5	**307 L4**	—	**BN90LB4**	—	48600	60900	104100	136400	42200	312
1.2	12845	1.3	1149	7.5	**309 L4**	—	**BN90LB4**	—	—	—	105500	136100	33700	324
1.4	11406	2.5	1021	11.0	**310 L4**	—	**BN90LB4**	—	—	—	120700	151800	58500	336
1.4	11166	1.2	999	7.5	**307 L4**	—	**BN90LB4**	—	46300	58000	99600	130500	40200	312
1.4	11166	1.6	999	7.5	**309 L4**	—	**BN90LB4**	—	—	—	101200	130500	32200	324
1.5	10129	1.5	906	7.5	**307 L4**	—	**BN90LB4**	—	44800	56200	96700	126800	38900	312
1.5	10129	1.8	906	7.5	**309 L4**	—	**BN90LB4**	—	—	—	98300	126800	31100	324
1.5	10037	2.3	898	15.0	—	**310 R4**	**BN90LB4**	—	—	—	116100	146000	56100	338
1.7	8947	1.5	801	7.5	**307 L4**	—	**BN90LB4**	—	43000	53900	93200	122100	37400	312
1.7	8947	2.0	801	7.5	**309 L4**	—	**BN90LB4**	—	—	—	94700	122100	29900	324
1.9	8071	1.9	722	7.5	**307 L4**	—	**BN90LB4**	—	41500	52100	90400	118400	36100	312
1.9	8071	2.6	722	7.5	**309 L4**	—	**BN90LB4**	—	—	—	91800	118400	28900	324
2.0	7819	1.2	700	6.0	**306 L4**	—	**BN90LB4**	—	37000	41900	83200	96900	27800	300
2.0	7709	1.3	690	15.0	—	**307 R4**	**BN90LB4**	—	40900	51300	89100	116800	35500	314
2.0	7709	1.9	690	15.0	—	**309 R4**	**BN90LB4**	—	—	—	90600	116800	28400	326
2.1	7304	1.8	654	7.5	**307 L4**	—	**BN90LB4**	—	40200	50400	87700	114900	34900	312
2.1	7304	2.5	654	7.5	**309 L4**	—	**BN90LB4**	—	—	—	89100	114900	27900	324
2.2	7103	1.3	636	6.0	**306 L4**	—	**BN90LB4**	—	35800	40600	80800	94100	26900	300
2.4	6598	1.3	590	12.0	—	**306 R4**	**BN90LB4**	—	34900	39600	79100	92100	26200	302
2.4	6586	1.4	589	6.0	**306 L4**	—	**BN90LB4**	—	34900	39600	79000	92000	26200	300

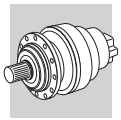

P_1 = 1.85 kW

n_2 min^{-1}	M_{n2} Nm	f_S	i	P_t kW					Rn_2 [N] MC	MZ	HC/PC	HZ/PZ	FZ	
2.4	6495	1.9	581	15.0	—	**307 R4**	**BN90LB4**	—	38600	48500	84700	110900	33600	314
2.4	6495	2.4	581	15.0	—	**309 R4**	**BN90LB4**	—	—	—	86000	110900	26900	326
2.4	6467	2.3	579	7.5	**307 L4**	—	**BN90LB4**	—	38600	48400	84500	110800	33500	312
2.5	6146	1.2	550	12.0	—	**306 R4**	**BN90LB4**	—	34100	38700	77400	90100	25600	302
2.7	5691	1.7	509	6.0	**306 L4**	—	**BN90LB4**	—	33300	37700	75600	88100	25000	300
2.7	5691	2.5	509	7.5	**307 L4**	—	**BN90LB4**	—	37000	46400	81400	106600	32100	312
2.7	5691	2.5	509	7.5	**309 L4**	—	**BN90LB4**	—	—	—	82700	106600	25700	324
2.8	5502	1.0	492	6.0	**305 L4**	—	**BN90LB4**	—	26400	30500	45800	55100	16900	288
2.8	5482	1.7	490	15.0	—	**307 R4**	**BN90LB4**	—	36500	45800	80500	105400	31700	314
2.8	5482	2.6	490	15.0	—	**309 R4**	**BN90LB4**	—	—	—	81700	105400	25400	326
2.8	5455	1.7	488	12.0	—	**306 R4**	**BN90LB4**	—	32800	37100	74700	87000	24600	302
3.0	5195	2.3	465	7.5	**307 L4**	—	**BN90LB4**	—	35800	45000	79200	103700	31200	312
3.0	5106	2.7	457	15.0	—	**309 R4**	**BN90LB4**	—	—	—	80000	103200	24800	326
3.1	5081	1.4	455	12.0	—	**306 R4**	**BN90LB4**	—	32000	36300	73100	85100	24100	302
3.1	5061	2.6	453	15.0	—	**307 R4**	**BN90LB4**	—	35500	44600	78600	102900	30900	314
3.1	5048	0.9	452	12.0	—	**305 R4**	**BN90LB4**	—	25700	29600	44600	53700	16500	278
3.1	4980	1.1	446	6.0	**305 L4**	—	**BN90LB4**	—	25500	29500	44400	53400	16400	288
3.1	4965	2.0	444	6.0	**306 L4**	—	**BN90LB4**	—	31800	36000	72600	84500	23900	300
3.3	4692	1.9	420	12.0	—	**306 R4**	**BN90LB4**	—	31200	35300	71400	83100	23400	302
3.4	4619	2.6	413	15.0	—	**307 R4**	**BN90LB4**	—	34500	43200	76400	100100	30000	314
3.4	4618	1.0	413	6.0	**305 L4**	—	**BN90LB4**	—	24900	28800	43400	52200	16000	288
3.4	4532	2.6	406	7.5	**307 L4**	—	**BN90LB4**	—	34300	43000	76000	99600	29800	312
3.4	4681	1.2	405	7.5	**306 L3**	—	**BN90LB4**	—	30800	34900	70600	82200	23100	300
3.6	4369	1.6	391	6.0	**306 L4**	—	**BN90LB4**	—	30400	34500	69900	81400	22900	300
3.6	4347	1.7	389	12.0	—	**306 R4**	**BN90LB4**	—	30400	34400	69800	81200	22800	302
3.8	4067	1.1	364	12.0	—	**305 R4**	**BN90LB4**	—	23900	27600	41800	50300	15300	278
4.1	3888	2.3	336	11.0	**307 L3**	—	**BN90LB4**	—	32200	40400	71900	94200	28000	312
4.1	3751	1.2	336	12.0	—	**305 R4**	**BN90LB4**	—	23200	26800	40800	49100	14900	278
4.3	3750	1.5	325	7.5	**306 L3**	—	**BN90LB4**	—	28600	32400	66100	76900	21500	300
4.3	3715	1.0	321	7.5	**305 L3**	—	**BN90LB4**	—	22900	26400	40300	48500	14700	288
4.4	3494	1.0	313	12.0	—	**305 R4**	**BN90LB4**	—	22700	26200	39900	48100	14600	278
4.5	3483	2.2	312	12.0	—	**306 R4**	**BN90LB4**	—	28200	32000	65300	76000	21200	302
4.5	3426	1.0	307	12.0	—	**304 R4**	**BN90LB4**	—	22500	26000	39700	47800	14500	278
4.8	3241	1.1	290	12.0	—	**304 R4**	**BN90LB4**	—	22100	25600	39100	47000	14200	278
4.8	3241	1.6	290	12.0	—	**305 R4**	**BN90LB4**	—	22100	25600	39100	47000	14200	278
4.8	3230	2.6	289	12.0	—	**306 R4**	**BN90LB4**	—	27500	31200	63800	74300	20700	302
4.8	3328	1.7	288	7.5	**306 L3**	—	**BN90LB4**	—	27500	31200	63700	74200	20700	300
5.0	3195	1.4	276	7.5	**305 L3**	—	**BN90LB4**	—	21800	25200	38500	46300	14000	288
5.2	3100	1.8	268	7.5	**306 L3**	—	**BN90LB4**	—	26900	30400	62400	72700	20200	300
5.2	2989	1.2	267	12.0	—	**304 R4**	**BN90LB4**	—	21500	24900	38100	45900	13800	278
5.4	2976	1.2	258	7.5	**305 L3**	—	**BN90LB4**	—	21300	24600	37700	45300	13600	288
5.4	2852	1.3	255	12.0	—	**305 R4**	**BN90LB4**	—	21200	24500	37600	45200	13600	278
5.6	2778	3.0	249	12.0	—	**306 R4**	**BN90LB4**	—	26200	29700	61000	71000	19700	302
5.8	2751	3.0	238	7.5	**306 L3**	—	**BN90LB4**	—	25800	29200	60200	70100	19400	300
6.0	2582	1.4	231	12.0	—	**305 R4**	**BN90LB4**	—	20500	23700	36500	43900	13200	278
6.0	2574	2.9	230	12.0	—	**306 R4**	**BN90LB4**	—	25500	28900	59600	69400	19200	302
6.1	2532	1.4	227	12.0	—	**304 R4**	**BN90LB4**	—	20400	23500	36300	43600	13100	278
6.3	2563	2.5	222	7.5	**306 L3**	—	**BN90LB4**	—	25200	28600	58900	68600	18900	300
6.3	2546	1.4	220	7.5	**304 L3**	—	**BN90LB4**	—	20200	23300	36000	43300	13000	288
6.3	2546	1.9	220	7.5	**305 L3**	—	**BN90LB4**	—	20200	23300	36000	43300	13000	288
6.5	2395	1.1	214	12.0	—	**303 R4**	**BN90LB4**	—	20000	23100	35700	42900	12800	266
6.5	2395	1.5	214	12.0	—	**304 R4**	**BN90LB4**	—	20000	23100	35700	42900	12800	278
6.5	2395	2.3	214	12.0	—	**305 R4**	**BN90LB4**	—	20000	23100	35700	42900	12800	278
6.9	2331	1.0	202	7.5	**304 L3**	—	**BN90LB4**	—	19600	22600	35000	42100	12600	288
7.3	2199	1.6	190	7.5	**305 L3**	—	**BN90LB4**	—	19200	22200	34400	41400	12300	288
7.3	2193	3.0	190	7.5	**306 L3**	—	**BN90LB4**	—	23900	27100	56200	65500	18000	300
7.5	2067	1.1	185	12.0	—	**303 R4**	**BN90LB4**	—	19100	22000	34100	41100	12200	266
7.5	2067	1.7	185	12.0	—	**304 R4**	**BN90LB4**	—	19100	22000	34100	41100	12200	278
7.5	2067	2.2	185	12.0	—	**305 R4**	**BN90LB4**	—	19100	22000	34100	41100	12200	278
7.8	2052	1.1	178	7.5	**303 L3**	—	**BN90LB4**	—	18800	21700	33700	40600	12100	264
7.8	2052	1.4	178	7.5	**304 L3**	—	**BN90LB4**	—	18800	21700	33700	40600	12100	288
7.8	2052	2.2	178	7.5	**305 L3**	—	**BN90LB4**	—	18800	21700	33700	40600	12100	288
7.9	1961	0.9	175	10.0	—	**301 R4**	**BN90LB4**	—	5950	5950	16100	18500	3910	256
8.4	1903	1.3	165	7.5	**304 L3**	—	**BN90LB4**	—	18300	21200	33000	39600	11800	288
8.5	1892	1.2	164	7.5	**303 L3**	—	**BN90LB4**	—	18300	21100	32900	39600	11700	264

A

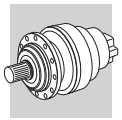

P_1 = 1.85 kW

n_2 min^{-1}	M_{n2} Nm	f_S	i	P_t kW					Rn_2 [N] MC	MZ	HC/PC	HZ/PZ	FZ	
8.5	1892	2.3	164	7.5	**305 L3**	—	**BN90LB4**	—	18300	21100	32900	39600	11700	288
8.8	1775	1.0	159	10.0	—	**301 R4**	**BN90LB4**	—	5890	5890	16000	18300	3870	256
8.8	1770	1.5	158	12.0	—	**303 R4**	**BN90LB4**	—	18100	20900	32600	39200	11600	266
8.8	1770	2.0	158	12.0	—	**304 R4**	**BN90LB4**	—	18100	20900	32600	39200	11600	278
9.1	1762	1.0	152	7.5	**303 L3**	—	**BN90LB4**	—	17900	20600	32200	38700	11500	264
9.1	1762	2.0	152	7.5	**305 L3**	—	**BN90LB4**	—	17900	20600	32200	38700	11500	288
9.3	1728	2.0	150	7.5	**304 L3**	—	**BN90LB4**	—	17800	20500	32000	38500	11400	288
9.4	1656	2.1	148	12.0	—	**304 R4**	**BN90LB4**	—	17700	20400	31900	38400	11400	278
9.4	1656	1.4	148	12.0	—	**303 R4**	**BN90LB4**	—	17700	20400	31900	38400	11400	266
9.4	1656	2.7	148	12.0	—	**305 R4**	**BN90LB4**	—	17700	20400	31900	38400	11400	278
9.8	1640	1.0	142	7.5	**301 L3**	—	**BN90LB4**	—	5670	5670	15400	17700	3730	254
9.8	1635	1.6	141	7.5	**303 L3**	—	**BN90LB4**	—	17400	20100	31500	37900	11200	264
9.8	1635	2.2	141	7.5	**304 L3**	—	**BN90LB4**	—	17400	20100	31500	37900	11200	288
10.6	1512	1.1	131	7.5	**301 L3**	—	**BN90LB4**	—	5520	5520	15100	17300	3630	254
10.7	1508	2.3	130	7.5	**304 L3**	—	**BN90LB4**	—	17000	19600	30700	37000	10900	288
10.7	1449	1.2	130	10.0	—	**301 R4**	**BN90LB4**	—	5510	5510	15000	17300	3620	256
10.8	1445	1.8	129	12.0	—	**303 R4**	**BN90LB4**	—	16900	19500	30600	36900	10800	266
10.8	1445	2.4	129	12.0	—	**304 R4**	**BN90LB4**	—	16900	19500	30600	36900	10800	278
11.2	1439	1.3	124	7.5	**303 L3**	—	**BN90LB4**	—	16700	19300	30300	36500	10700	264
11.2	1439	2.5	124	7.5	**305 L3**	—	**BN90LB4**	—	16700	19300	30300	36500	10700	288
11.5	1401	1.7	121	14.0	—	**304 R3**	**BN90LB4**	—	16600	19100	30100	36200	10600	278
12.0	1339	1.0	116	7.5	**301 L3**	—	**BN90LB4**	—	5300	5300	14500	16700	3490	254
12.2	1322	1.4	114	14.0	—	**303 R3**	**BN90LB4**	—	16200	18700	29500	35500	10400	266
12.2	1322	2.7	114	14.0	—	**305 R3**	**BN90LB4**	—	16200	18700	29500	35500	10400	278
12.3	1302	1.4	113	7.5	**303 L3**	—	**BN90LB4**	—	16200	18600	29400	35400	10400	264
12.3	1302	2.8	113	7.5	**305 L3**	—	**BN90LB4**	—	16200	18600	29400	35400	10400	288
12.6	1277	2.6	111	7.5	**304 L3**	—	**BN90LB4**	—	16000	18500	29200	35200	10300	288
12.7	1224	2.8	109	12.0	—	**304 R4**	**BN90LB4**	—	16000	18500	29200	35100	10300	278
13.1	1230	1.1	106	12.0	—	**301 R3**	**BN90LB4**	—	5160	5160	14200	16300	3390	256
13.1	1183	1.4	106	10.0	—	**301 R4**	**BN90LB4**	—	5150	5150	14100	16200	3380	256
13.3	1212	1.4	105	7.5	**301 L3**	—	**BN90LB4**	—	5130	5130	14100	16200	3370	254
13.3	1208	2.1	105	7.5	**303 L3**	—	**BN90LB4**	—	15800	18200	28800	34600	10100	264
13.3	1208	2.9	105	7.5	**304 L3**	—	**BN90LB4**	—	15800	18200	28800	34600	10100	288
14.3	1121	2.1	97.0	14.0	—	**304 R3**	**BN90LB4**	—	15400	17700	28100	33800	9860	278
15.2	1058	1.7	91.5	14.0	—	**303 R3**	**BN90LB4**	—	15100	17400	27600	33200	9670	266
15.4	1042	2.2	90.2	7.5	**303 L3**	—	**BN90LB4**	—	15000	17300	27500	33100	9620	264
16.2	989	1.7	85.6	7.5	**301 L3**	—	**BN90LB4**	—	4790	4790	13300	15200	3150	254
16.3	984	1.3	85.2	12.0	—	**301 R3**	**BN90LB4**	—	4790	4790	13200	15200	3150	256
17.7	910	2.4	78.7	14.0	—	**303 R3**	**BN90LB4**	—	14300	16500	26400	31800	9190	266
17.7	909	0.9	78.7	12.0	—	**300 R3**	**BN90LB4**	—	4660	4660	12900	14900	3060	246
17.7	909	1.7	78.7	12.0	—	**301 R3**	**BN90LB4**	—	4660	4660	12900	14900	3060	256
17.9	895	0.9	77.5	7.5	**300 L3**	—	**BN90LB4**	—	4640	4640	12900	14800	3050	244
17.9	895	1.9	77.5	7.5	**301 L3**	—	**BN90LB4**	—	4640	4640	12900	14800	3050	254
18.0	893	2.8	77.2	7.5	**303 L3**	—	**BN90LB4**	—	14200	16400	26300	31600	9140	264
19.0	847	2.1	73.3	14.0	—	**303 R3**	**BN90LB4**	—	14000	16200	25900	31100	8980	266
19.2	835	2.7	72.3	7.5	**303 L3**	—	**BN90LB4**	—	13900	16100	25700	31000	8940	264
19.9	807	1.6	69.9	7.5	**301 L3**	—	**BN90LB4**	—	4480	4480	12500	14300	2950	254
20.4	789	1.6	68.2	12.0	—	**301 R3**	**BN90LB4**	—	4440	4440	12400	14200	2920	256
21.5	774	1.5	64.8	7.5	**301 L2**	—	**BN90LB4**	—	4370	4370	12200	14000	2870	254
22.0	731	1.2	63.2	7.5	**300 L3**	—	**BN90LB4**	—	4330	4330	12100	13900	2850	244
22.0	731	2.3	63.2	7.5	**301 L3**	—	**BN90LB4**	—	4330	4330	12100	13900	2850	254
22.0	729	3.0	63.1	14.0	—	**303 R3**	**BN90LB4**	—	13300	15400	24700	29700	8540	266
22.1	727	1.2	62.9	12.0	—	**300 R3**	**BN90LB4**	—	4330	4330	12100	13900	2840	246
22.1	727	2.3	62.9	12.0	—	**301 R3**	**BN90LB4**	—	4330	4330	12100	13900	2840	256
24.9	666	2.7	55.8	9.0	**303 L2**	—	**BN90LB4**	—	12800	14800	23800	28700	8200	264
25.7	626	2.9	54.2	14.0	—	**303 R3**	**BN90LB4**	—	12700	14600	23600	28400	8120	266
26.8	620	1.0	51.9	7.5	**300 L2**	—	**BN90LB4**	—	4060	4060	11400	13100	2670	244
26.8	620	2.1	51.9	7.5	**301 L2**	—	**BN90LB4**	—	4060	4060	11400	13100	2670	254
26.9	597	1.4	51.6	7.5	**300 L3**	—	**BN90LB4**	—	4050	4050	11400	13100	2660	244
26.9	597	2.7	51.6	7.5	**301 L3**	—	**BN90LB4**	—	4050	4050	11400	13100	2660	254
27.6	583	1.5	50.4	12.0	—	**300 R3**	**BN90LB4**	—	4020	4020	11300	13000	2640	246
27.6	583	2.8	50.4	12.0	—	**301 R3**	**BN90LB4**	—	4020	4020	11300	13000	2640	256
33	496	1.3	41.5	7.5	**300 L2**	—	**BN90LB4**	—	3770	3770	10700	12300	2480	244
33	496	2.6	41.5	7.5	**301 L2**	—	**BN90LB4**	—	3770	3770	10700	12300	2480	254
34	476	1.4	41.2	12.0	—	**300 R3**	**BN90LB4**	—	3760	3760	10600	12200	2470	246

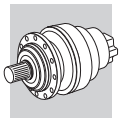

P_1 = 1.85 kW

n_2 min^{-1}	M_{n2} Nm	f_S	i	P_t kW					Rn_2 [N] MC	MZ	HC/PC	HZ/PZ	FZ	
34	476	2.7	41.2	12.0	—	**301 R3**	**BN90LB4**	—	3760	3760	10600	12200	2470	256
36	458	1.8	38.4	7.5	**300 L2**	—	**BN90LB4**	—	3670	3670	10400	12000	2410	244
37	431	2.0	37.3	12.0	—	**300 R3**	**BN90LB4**	—	3630	3630	10300	11900	2390	246
42	397	1.6	33.3	7.5	**300 L2**	—	**BN90LB4**	—	3500	3500	9990	11500	2300	244
45	366	2.3	30.7	7.5	**300 L2**	—	**BN90LB4**	—	3410	3410	9750	11200	2240	244
46	351	2.4	30.4	12.0	—	**300 R3**	**BN90LB4**	—	3400	3400	9730	11200	2230	246
56	287	2.5	24.8	12.0	—	**300 R3**	**BN90LB4**	—	3170	3170	9150	10500	2090	246
56	296	2.9	24.8	18.0	—	**303 R2**	**BN90LB4**	—	9750	11300	18700	22500	6250	266
57	294	2.7	24.6	7.5	**300 L2**	—	**BN90LB4**	—	3160	3160	9130	10500	2080	244
69	240	2.7	20.1	7.5	**300 L2**	—	**BN90LB4**	—	2960	2960	8590	9870	1940	244
75	220	1.7	18.5	12.0	—	**300 R2**	**BN90LB4**	—	2870	2870	8370	9620	1890	246
94	176	2.9	14.8	12.0	—	**300 R2**	**BN90LB4**	—	2670	2670	7830	9000	1750	246
154	111	2.9	9.0	7.5	**300 L1**	—	**BN90LB4**	—	2260	2260	6750	7750	1490	244

P_1 = 2.2 kW

n_2 min^{-1}	M_{n2} Nm	f_S	i	P_t kW					Rn_2 [N] MC	MZ	HC/PC	HZ/PZ	FZ	
0.64	28676	1.7	2187	11.0	**313 L4**	—	**BN100LA4**	—	—	—	192000	231000	80000	360
0.67	27488	1.2	2096	11.0	**311 L4**	—	**BN100LA4**	—	—	—	157000	195000	65000	348
0.70	26513	1.0	2022	11.0	**310 L4**	—	**BN100LA4**	—	—	—	133000	166000	65000	336
0.78	23823	2.4	1817	11.0	**313 L4**	—	**BN100LA4**	—	—	—	192000	231000	80000	360
0.79	23529	1.1	1794	11.0	**310 L4**	—	**BN100LA4**	—	—	—	133000	166000	65000	336
0.80	23161	1.9	1766	11.0	**311 L4**	—	**BN100LA4**	—	—	—	157000	195000	65000	348
0.84	22026	1.5	1680	11.0	**311 L4**	—	**BN100LA4**	—	—	—	157000	195000	65000	348
0.84	21917	1.2	1672	11.0	**310 L4**	—	**BN100LA4**	—	—	—	133000	166000	65000	336
0.94	19694	2.9	1502	11.0	**313 L4**	—	**BN100LA4**	—	—	—	192000	231000	80000	360
0.98	18853	1.4	1438	11.0	**310 L4**	—	**BN100LA4**	—	—	—	133000	166000	65000	336
1.0	18559	2.3	1415	11.0	**311 L4**	—	**BN100LA4**	—	—	—	157000	195000	65000	348
1.0	18277	2.9	1394	11.0	**313 L4**	—	**BN100LA4**	—	—	—	192000	229000	79900	360
1.0	18099	0.9	1380	7.5	**309 L4**	—	**BN100LA4**	—	—	—	110000	143800	35800	324
1.1	16859	1.0	1286	7.5	**309 L4**	—	**BN100LA4**	—	—	—	109200	140800	35000	324
1.1	16508	1.7	1259	11.0	**310 L4**	—	**BN100LA4**	—	—	—	128500	161600	62700	336
1.1	16133	2.7	1230	11.0	**311 L4**	—	**BN100LA4**	—	—	—	150800	187900	62300	348
1.2	15266	1.9	1164	11.0	**310 L4**	—	**BN100LA4**	—	—	—	125500	157900	61100	336
1.2	15166	0.9	1157	7.5	**307 L4**	—	**BN100LA4**	**M3LA4**	47500	59600	101900	133600	41300	312
1.2	15070	1.1	1149	7.5	**309 L4**	—	**BN100LA4**	—	—	—	105500	136100	33700	324
1.4	13382	2.1	1021	11.0	**310 L4**	—	**BN100LA4**	—	—	—	120700	151800	58500	336
1.4	13100	1.1	999	7.5	**307 L4**	—	**BN100LA4**	**M3LA4**	46300	58000	99600	130500	40200	312
1.4	13100	1.4	999	7.5	**309 L4**	—	**BN100LA4**	—	—	—	101200	130500	32200	324
1.5	12310	2.7	939	11.0	**310 L4**	—	**BN100LA4**	—	—	—	117700	148000	56900	336
1.6	11883	1.3	906	7.5	**307 L4**	—	**BN100LA4**	**M3LA4**	44800	56200	96700	126800	38900	312
1.6	11883	1.5	906	7.5	**309 L4**	—	**BN100LA4**	—	—	—	98300	126800	31100	324
1.6	11776	2.0	898	15.0	—	**310 R4**	**BN100LA4**	—	—	—	116100	146000	56100	338
1.7	10723	2.6	818	11.0	**310 L4**	—	**BN100LA4**	—	—	—	112900	142000	54300	336
1.8	10497	1.3	801	7.5	**307 L4**	—	**BN100LA4**	**M3LA4**	43000	53900	93200	122100	37400	312
1.8	10497	1.7	801	7.5	**309 L4**	—	**BN100LA4**	—	—	—	94700	122100	29900	324
1.9	9922	2.7	757	15.0	—	**310 R4**	**BN100LA4**	—	—	—	110300	138700	52900	338
1.9	9516	2.8	726	11.0	**310 L4**	—	**BN100LA4**	—	—	—	108900	137000	52200	336
2.0	9470	1.6	722	7.5	**307 L4**	—	**BN100LA4**	**M3LA4**	41500	52100	90400	118400	36100	312
2.0	9470	2.2	722	7.5	**309 L4**	—	**BN100LA4**	—	—	—	91800	118400	28900	324
2.0	9173	1.0	700	6.0	**306 L4**	—	**BN100LA4**	**M3LA4**	37000	41900	83200	96900	27800	300
2.0	9044	1.1	690	15.0	—	**307 R4**	**BN100LA4**	**M3LA4**	40900	51300	89100	116800	35500	314
2.0	9044	1.6	690	15.0	—	**309 R4**	**BN100LA4**	—	—	—	90600	116800	28400	326
2.2	8569	1.5	654	7.5	**307 L4**	—	**BN100LA4**	**M3LA4**	40200	50400	87700	114900	34900	312
2.2	8569	2.1	654	7.5	**309 L4**	—	**BN100LA4**	—	—	—	89100	114900	27900	324
2.2	8374	2.6	639	15.0	—	**310 R4**	**BN100LA4**	—	—	—	104800	131800	50000	338
2.2	8333	1.1	636	6.0	**306 L4**	—	**BN100LA4**	**M3LA4**	35800	40600	80800	94100	26900	300
2.4	7741	1.1	590	12.0	—	**306 R4**	**BN100LA4**	**M3LA4**	34900	39600	79100	92100	26200	302
2.4	7732	2.8	590	15.0	—	**310 R4**	**BN100LA4**	—	—	—	102400	128700	48700	338
2.4	7727	1.2	589	6.0	**306 L4**	—	**BN100LA4**	**M3LA4**	34900	39600	79000	92000	26200	300
2.4	7620	1.7	581	15.0	—	**307 R4**	**BN100LA4**	**M3LA4**	38600	48500	84700	110900	33600	314

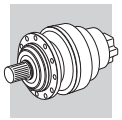

P_1 = 2.2 kW

n_2	M_{n2}	f_S	i	P_t					Rn_2 [N]					
min^{-1}	Nm			kW					MC	MZ	HC/PC	HZ/PZ	FZ	
2.4	7620	2.1	581	15.0	—	**309 R4**	**BN100LA4**	—	—	—	86000	110900	26900	326
2.4	7588	2.0	579	7.5	**307 L4**	—	**BN100LA4**	**M3LA4**	38600	48400	84500	110800	33500	312
2.4	7588	2.8	579	7.5	**309 L4**	—	**BN100LA4**	—	—	—	85900	110800	26800	324
2.6	7211	1.0	550	12.0	—	**306 R4**	**BN100LA4**	**M3LA4**	34100	38700	77400	90100	25600	302
2.8	6677	1.4	509	6.0	**306 L4**	—	**BN100LA4**	**M3LA4**	33300	37700	75600	88100	25000	300
2.8	6677	2.1	509	7.5	**307 L4**	—	**BN100LA4**	**M3LA4**	37000	46400	81400	106600	32100	312
2.8	6677	2.1	509	7.5	**309 L4**	—	**BN100LA4**	—	—	—	82700	106600	25700	324
2.9	6431	1.5	490	15.0	—	**307 R4**	**BN100LA4**	**M3LA4**	36500	45800	80500	105400	31700	314
2.9	6431	2.2	490	15.0	—	**309 R4**	**BN100LA4**	—	—	—	81700	105400	25400	326
2.9	6399	1.4	488	12.0	—	**306 R4**	**BN100LA4**	**M3LA4**	32800	37100	74700	87000	24600	302
3.0	6095	2.0	465	7.5	**307 L4**	—	**BN100LA4**	**M3LA4**	35800	45000	79200	103700	31200	312
3.1	5991	2.3	457	15.0	—	**309 R4**	**BN100LA4**	—	—	—	80000	103200	24800	326
3.1	5961	1.2	455	12.0	—	**306 R4**	**BN100LA4**	**M3LA4**	32000	36300	73100	85100	24100	302
3.1	5938	2.3	453	15.0	—	**307 R4**	**BN100LA4**	**M3LA4**	35500	44600	78600	102900	30900	314
3.2	5843	0.9	446	6.0	**305 L4**	—	**BN100LA4**	**M3LA4**	25500	29500	44400	53400	16400	288
3.2	5825	1.7	444	6.0	**306 L4**	—	**BN100LA4**	**M3LA4**	31800	36000	72600	84500	23900	300
3.4	5505	1.6	420	12.0	—	**306 R4**	**BN100LA4**	**M3LA4**	31200	35300	71400	83100	23400	302
3.4	5419	2.2	413	15.0	—	**307 R4**	**BN100LA4**	**M3LA4**	34500	43200	76400	100100	30000	314
3.5	5317	2.2	406	7.5	**307 L4**	—	**BN100LA4**	**M3LA4**	34300	43000	76000	99600	29800	312
3.5	5491	1.0	405	7.5	**306 L3**	—	**BN100LA4**	**M3LA4**	30800	34900	70600	82200	23100	300
3.6	5126	1.3	391	6.0	**306 L4**	—	**BN100LA4**	**M3LA4**	30400	34500	69900	81400	22900	300
3.6	5100	1.5	389	12.0	—	**306 R4**	**BN100LA4**	**M3LA4**	30400	34400	69800	81200	22800	302
3.8	4909	2.9	374	15.0	—	**309 R4**	**BN100LA4**	—	—	—	75400	97200	23200	326
3.9	4772	1.0	364	12.0	—	**305 R4**	**BN100LA4**	**M3LA4**	23900	27600	41800	50300	15300	278
3.9	4758	2.6	363	15.0	—	**307 R4**	**BN100LA4**	**M3LA4**	33000	41400	73500	96300	28700	314
4.2	4562	1.9	336	11.0	**307 L3**	—	**BN100LA4**	**M3LA4**	32200	40400	71900	94200	28000	312
4.2	4562	2.9	336	11.0	**309 L3**	—	**BN100LA4**	—	—	—	73000	94200	22400	324
4.2	4400	1.0	336	12.0	—	**305 R4**	**BN100LA4**	**M3LA4**	23200	26800	40800	49100	14900	278
4.3	4342	2.6	331	15.0	—	**307 R4**	**BN100LA4**	**M3LA4**	32000	40200	71500	93700	27800	314
4.3	4400	1.3	325	7.5	**306 L3**	—	**BN100LA4**	**M3LA4**	28600	32400	66100	76900	21500	300
4.5	4086	1.9	312	12.0	—	**306 R4**	**BN100LA4**	**M3LA4**	28200	32000	65300	76000	21200	302
4.9	3802	1.0	290	12.0	—	**304 R4**	**BN100LA4**	**M3LA4**	22100	25600	39100	47000	14200	278
4.9	3802	1.4	290	12.0	—	**305 R4**	**BN100LA4**	**M3LA4**	22100	25600	39100	47000	14200	278
4.9	3789	2.2	289	12.0	—	**306 R4**	**BN100LA4**	**M3LA4**	27500	31200	63800	74300	20700	302
4.9	3905	1.4	288	7.5	**306 L3**	—	**BN100LA4**	**M3LA4**	27500	31200	63700	74200	20700	300
5.0	3844	2.9	284	11.0	**307 L3**	—	**BN100LA4**	**M3LA4**	30400	38100	68300	89400	26400	312
5.1	3749	1.2	276	7.5	**305 L3**	—	**BN100LA4**	**M3LA4**	21800	25200	38500	46300	14000	288
5.3	3637	1.5	268	7.5	**306 L3**	—	**BN100LA4**	**M3LA4**	26900	30400	62400	72700	20200	300
5.3	3507	1.0	267	12.0	—	**304 R4**	**BN100LA4**	**M3LA4**	21500	24900	38100	45900	13800	278
5.5	3492	1.0	258	7.5	**305 L3**	—	**BN100LA4**	**M3LA4**	21300	24600	37700	45300	13600	288
5.5	3346	1.1	255	12.0	—	**305 R4**	**BN100LA4**	**M3LA4**	21200	24500	37600	45200	13600	278
5.7	3260	2.5	249	12.0	—	**306 R4**	**BN100LA4**	**M3LA4**	26200	29700	61000	71000	19700	302
5.9	3244	2.7	239	11.0	**307 L3**	—	**BN100LA4**	**M3LA4**	28700	36000	64900	85000	25000	312
5.9	3228	2.5	238	7.5	**306 L3**	—	**BN100LA4**	**M3LA4**	25800	29200	60200	70100	19400	300
6.1	3029	1.2	231	12.0	—	**305 R4**	**BN100LA4**	**M3LA4**	20500	23700	36500	43900	13200	278
6.1	3019	2.5	230	12.0	—	**306 R4**	**BN100LA4**	**M3LA4**	25500	28900	59600	69400	19200	302
6.2	2970	1.2	227	12.0	—	**304 R4**	**BN100LA4**	**M3LA4**	20400	23500	36300	43600	13100	278
6.4	3007	2.2	222	7.5	**306 L3**	—	**BN100LA4**	**M3LA4**	25200	28600	58900	68600	18900	300
6.4	2987	1.2	220	7.5	**304 L3**	—	**BN100LA4**	**M3LA4**	20200	23300	36000	43300	13000	288
6.4	2987	1.6	220	7.5	**305 L3**	—	**BN100LA4**	**M3LA4**	20200	23300	36000	43300	13000	288
6.6	2810	1.0	214	12.0	—	**303 R4**	**BN100LA4**	**M3LA4**	20000	23100	35700	42900	12800	266
6.6	2810	1.3	214	12.0	—	**304 R4**	**BN100LA4**	**M3LA4**	20000	23100	35700	42900	12800	278
6.6	2810	1.9	214	12.0	—	**305 R4**	**BN100LA4**	**M3LA4**	20000	23100	35700	42900	12800	278
6.9	2777	2.9	205	7.5	**306 L3**	—	**BN100LA4**	**M3LA4**	24500	27800	57600	67000	18400	300
7.4	2580	1.4	190	7.5	**305 L3**	—	**BN100LA4**	**M3LA4**	19200	22200	34400	41400	12300	288
7.4	2572	2.5	190	7.5	**306 L3**	—	**BN100LA4**	**M3LA4**	23900	27100	56200	65500	18000	300
7.6	2425	1.0	185	12.0	—	**303 R4**	**BN100LA4**	**M3LA4**	18600	21500	33400	40200	11900	266
7.6	2425	1.4	185	12.0	—	**304 R4**	**BN100LA4**	**M3LA4**	19100	22000	34100	41100	12200	278
7.6	2425	1.9	185	12.0	—	**305 R4**	**BN100LA4**	**M3LA4**	19100	22000	34100	41100	12200	278
7.9	2407	0.9	178	7.5	**303 L3**	—	**BN100LA4**	**M3LA4**	18800	21700	33700	40600	12100	264
7.9	2407	1.2	178	7.5	**304 L3**	—	**BN100LA4**	**M3LA4**	18800	21700	33700	40600	12100	288
7.9	2407	1.8	178	7.5	**305 L3**	—	**BN100LA4**	**M3LA4**	18800	21700	33700	40600	12100	288
8.6	2233	1.1	165	7.5	**304 L3**	—	**BN100LA4**	**M3LA4**	18300	21200	33000	39600	11800	288
8.6	2220	1.0	164	7.5	**303 L3**	—	**BN100LA4**	**M3LA4**	18300	21100	32900	39600	11700	264
8.6	2220	2.0	164	7.5	**305 L3**	—	**BN100LA4**	**M3LA4**	18300	21100	32900	39600	11700	288

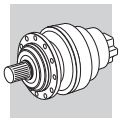

P_1 = 2.2 kW

n_2 min^{-1}	M_{n2} Nm	f_S	i	P_t kW					Rn_2 [N] MC	MZ	HC/PC	HZ/PZ	FZ	
8.9	2076	1.3	158	12.0	—	**303 R4**	**BN100LA4**	**M3LA4**	18100	20900	32600	39200	11600	266
8.9	2076	1.7	158	12.0	—	**304 R4**	**BN100LA4**	**M3LA4**	18100	20900	32600	39200	11600	278
8.9	2076	2.6	158	12.0	—	**305 R4**	**BN100LA4**	**M3LA4**	18100	20900	32600	39200	11600	278
9.2	2068	1.7	152	7.5	**305 L3**	—	**BN100LA4**	**M3LA4**	17900	20600	32200	38700	11500	288
9.4	2028	1.7	150	7.5	**304 L3**	—	**BN100LA4**	**M3LA4**	17800	20500	32000	38500	11400	288
9.5	1943	1.8	148	12.0	—	**304 R4**	**BN100LA4**	**M3LA4**	17700	20400	31900	38400	11400	278
9.5	1943	1.2	148	12.0	—	**303 R4**	**BN100LA4**	**M3LA4**	17700	20400	31900	38400	11400	266
9.5	1943	2.3	148	12.0	—	**305 R4**	**BN100LA4**	**M3LA4**	17700	20400	31900	38400	11400	278
9.8	1954	2.8	144	14.0	—	**306 R3**	**BN100LA4**	**M3LA4**	21800	24700	51800	60300	16400	302
10.0	1918	1.4	141	7.5	**303 L3**	—	**BN100LA4**	**M3LA4**	17400	20100	31500	37900	11200	264
10.0	1918	1.8	141	7.5	**304 L3**	—	**BN100LA4**	**M3LA4**	17400	20100	31500	37900	11200	288
10.0	1918	2.7	141	7.5	**305 L3**	—	**BN100LA4**	**M3LA4**	17400	20100	31500	37900	11200	288
10.8	1774	1.0	131	7.5	**301 L3**	—	**BN100LA4**	**M3LA4**	5520	5520	15100	17300	3630	254
10.8	1769	2.0	130	7.5	**304 L3**	—	**BN100LA4**	**M3LA4**	17000	19600	30700	37000	10900	288
10.9	1700	1.0	130	10.0	—	**301 R4**	**BN100LA4**	**M3LA4**	5510	5510	15000	17300	3620	256
10.9	1695	1.5	129	12.0	—	**303 R4**	**BN100LA4**	**M3LA4**	16900	19500	30600	36900	10800	266
10.9	1695	2.1	129	12.0	—	**304 R4**	**BN100LA4**	**M3LA4**	16900	19500	30600	36900	10800	278
11.3	1688	1.1	124	7.5	**303 L3**	—	**BN100LA4**	**M3LA4**	16700	19300	30300	36500	10700	264
11.3	1688	2.1	124	7.5	**305 L3**	—	**BN100LA4**	**M3LA4**	16700	19300	30300	36500	10700	288
11.6	1644	1.5	121	14.0	—	**304 R3**	**BN100LA4**	**M3LA4**	16600	19100	30100	36200	10600	278
12.3	1551	1.2	114	14.0	—	**303 R3**	**BN100LA4**	**M3LA4**	16200	18700	29500	35500	10400	266
12.3	1551	2.3	114	14.0	—	**305 R3**	**BN100LA4**	**M3LA4**	16200	18700	29500	35500	10400	278
12.5	1528	1.2	113	7.5	**303 L3**	—	**BN100LA4**	**M3LA4**	16200	18600	29400	35400	10400	264
12.5	1528	2.3	113	7.5	**305 L3**	—	**BN100LA4**	**M3LA4**	16200	18600	29400	35400	10400	288
12.8	1498	2.3	111	7.5	**304 L3**	—	**BN100LA4**	**M3LA4**	16000	18500	29200	35200	10300	288
12.9	1436	2.3	109	12.0	—	**304 R4**	**BN100LA4**	**M3LA4**	16000	18500	29200	35100	10300	278
13.2	1443	0.9	106	12.0	—	**301 R3**	**BN100LA4**	**M3LA4**	5160	5160	14200	16300	3390	256
13.3	1388	1.2	106	10.0	—	**301 R4**	**BN100LA4**	**M3LA4**	5150	5150	14100	16200	3380	256
13.4	1422	1.2	105	7.5	**301 L3**	—	**BN100LA4**	**M3LA4**	5130	5130	14100	16200	3370	254
13.5	1417	1.8	105	7.5	**303 L3**	—	**BN100LA4**	**M3LA4**	15800	18200	28800	34600	10100	264
13.5	1417	2.5	105	7.5	**304 L3**	—	**BN100LA4**	**M3LA4**	15800	18200	28800	34600	10100	288
14.5	1315	1.8	97.0	14.0	—	**304 R3**	**BN100LA4**	**M3LA4**	15400	17700	28100	33800	9860	278
15.4	1241	1.5	91.5	14.0	—	**303 R3**	**BN100LA4**	**M3LA4**	15100	17400	27600	33200	9670	266
15.4	1241	2.9	91.5	14.0	—	**305 R3**	**BN100LA4**	**M3LA4**	15100	17400	27600	33200	9670	278
15.6	1223	1.8	90.2	7.5	**303 L3**	—	**BN100LA4**	**M3LA4**	15000	17300	27500	33100	9620	264
15.6	1223	2.7	90.2	7.5	**304 L3**	—	**BN100LA4**	**M3LA4**	15000	17300	27500	33100	9620	288
15.8	1172	2.8	89.4	12.0	—	**304 R4**	**BN100LA4**	**M3LA4**	15000	17300	27400	33000	9590	278
16.5	1161	1.4	85.6	7.5	**301 L3**	—	**BN100LA4**	**M3LA4**	4790	4790	13300	15200	3150	254
16.6	1155	1.1	85.2	12.0	—	**301 R3**	**BN100LA4**	**M3LA4**	4790	4790	13200	15200	3150	256
17.9	1067	2.0	78.7	14.0	—	**303 R3**	**BN100LA4**	**M3LA4**	14300	16500	26400	31800	9190	266
17.9	1067	2.7	78.7	14.0	—	**304 R3**	**BN100LA4**	**M3LA4**	14300	16500	26400	31800	9190	278
17.9	1066	1.5	78.7	12.0	—	**301 R3**	**BN100LA4**	**M3LA4**	4660	4660	12900	14900	3060	256
18.2	1051	1.6	77.5	7.5	**301 L3**	—	**BN100LA4**	**M3LA4**	4640	4640	12900	14800	3050	254
18.3	1047	2.4	77.2	7.5	**303 L3**	—	**BN100LA4**	**M3LA4**	14200	16400	26300	31600	9140	264
19.2	994	1.8	73.3	14.0	—	**303 R3**	**BN100LA4**	**M3LA4**	14000	16200	25900	31100	8980	266
19.5	980	2.3	72.3	7.5	**303 L3**	—	**BN100LA4**	**M3LA4**	13900	16100	25700	31000	8940	264
20.2	947	1.4	69.9	7.5	**301 L3**	—	**BN100LA4**	**M3LA4**	4480	4480	12500	14300	2950	254
20.7	925	1.4	68.2	12.0	—	**301 R3**	**BN100LA4**	**M3LA4**	4440	4440	12400	14200	2920	256
21.8	908	1.3	64.8	7.5	**301 L2**	—	**BN100LA4**	**M3LA4**	4370	4370	12200	14000	2870	254
22.3	858	1.0	63.2	7.5	**300 L3**	—	**BN100LA4**	**M3LA4**	4330	4330	12100	13900	2850	244
22.3	858	1.9	63.2	7.5	**301 L3**	—	**BN100LA4**	**M3LA4**	4330	4330	12100	13900	2850	254
22.4	855	2.5	63.1	14.0	—	**303 R3**	**BN100LA4**	**M3LA4**	13300	15400	24700	29700	8540	266
22.4	855	2.9	63.1	7.5	**303 L3**	—	**BN100LA4**	**M3LA4**	13300	15400	24700	29700	8540	264
22.4	853	1.0	62.9	12.0	—	**300 R3**	**BN100LA4**	**M3LA4**	4330	4330	12100	13900	2840	246
22.4	853	1.9	62.9	12.0	—	**301 R3**	**BN100LA4**	**M3LA4**	4330	4330	12100	13900	2840	256
23.8	828	2.9	59.1	9.0	**304 L2**	—	**BN100LA4**	**M3LA4**	13000	15000	24200	29200	8360	288
25.3	782	2.3	55.8	9.0	**303 L2**	—	**BN100LA4**	**M3LA4**	12800	14800	23800	28700	8200	264
26.0	735	2.5	54.2	14.0	—	**303 R3**	**BN100LA4**	**M3LA4**	12700	14600	23600	28400	8120	266
26.4	724	3.0	53.4	7.5	**303 L3**	—	**BN100LA4**	**M3LA4**	12600	14500	23500	28300	8080	264
27.2	727	1.8	51.9	7.5	**301 L2**	—	**BN100LA4**	**M3LA4**	4060	4060	11400	13100	2670	254
27.3	700	1.2	51.6	7.5	**300 L3**	—	**BN100LA4**	**M3LA4**	4050	4050	11400	13100	2660	244
27.3	700	2.3	51.6	7.5	**301 L3**	—	**BN100LA4**	**M3LA4**	4050	4050	11400	13100	2660	254
28.0	684	1.2	50.4	12.0	—	**300 R3**	**BN100LA4**	**M3LA4**	4020	4020	11300	13000	2640	246
28.0	684	2.4	50.4	12.0	—	**301 R3**	**BN100LA4**	**M3LA4**	4020	4020	11300	13000	2640	256
32	625	2.9	44.6	9.0	**303 L2**	—	**BN100LA4**	**M3LA4**	11900	13700	22300	26800	7610	264

A

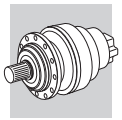

A

P_1 = 2.2 kW

n_2 min^{-1}	M_{n2} Nm	f_S	i	P_t kW					Rn_2 [N] MC	MZ	HC/PC	HZ/PZ	FZ	
34	582	1.1	41.5	7.5	**300 L2**	**—**	**BN100LA4**	**M3LA4**	3770	3770	10700	12300	2480	244
34	582	2.2	41.5	7.5	**301 L2**	**—**	**BN100LA4**	**M3LA4**	3770	3770	10700	12300	2480	254
34	558	1.2	41.2	12.0	**—**	**300 R3**	**BN100LA4**	**M3LA4**	3760	3760	10600	12200	2470	246
34	558	2.3	41.2	12.0	**—**	**301 R3**	**BN100LA4**	**M3LA4**	3760	3760	10600	12200	2470	256
37	537	1.6	38.4	7.5	**300 L2**	**—**	**BN100LA4**	**M3LA4**	3670	3670	10400	12000	2410	244
37	537	2.9	38.4	7.5	**301 L2**	**—**	**BN100LA4**	**M3LA4**	3670	3670	10400	12000	2410	254
38	505	1.7	37.3	12.0	**—**	**300 R3**	**BN100LA4**	**M3LA4**	3630	3630	10300	11900	2390	246
42	466	1.4	33.3	7.5	**300 L2**	**—**	**BN100LA4**	**M3LA4**	3500	3500	9990	11500	2300	244
42	466	2.8	33.3	7.5	**301 L2**	**—**	**BN100LA4**	**M3LA4**	3500	3500	9990	11500	2300	254
46	430	2.0	30.7	7.5	**300 L2**	**—**	**BN100LA4**	**M3LA4**	3410	3410	9750	11200	2240	244
46	412	2.0	30.4	12.0	**—**	**300 R3**	**BN100LA4**	**M3LA4**	3400	3400	9730	11200	2230	246
57	337	2.2	24.8	12.0	**—**	**300 R3**	**BN100LA4**	**M3LA4**	3170	3170	9150	10500	2090	246
57	347	2.5	24.8	18.0	**—**	**303 R2**	**BN100LA4**	**M3LA4**	9750	11300	18700	22500	6250	266
57	344	2.3	24.6	7.5	**300 L2**	**—**	**BN100LA4**	**M3LA4**	3160	3160	9130	10500	2080	244
70	281	2.3	20.1	7.5	**300 L2**	**—**	**BN100LA4**	**M3LA4**	2960	2960	8590	9870	1940	244
76	258	1.4	18.5	12.0	**—**	**300 R2**	**BN100LA4**	**M3LA4**	2870	2870	8370	9620	1890	246
76	258	2.9	18.5	12.0	**—**	**301 R2**	**BN100LA4**	**M3LA4**	2870	2870	8370	9620	1890	256
78	255	2.9	18.2	7.5	**300 L2**	**—**	**BN100LA4**	**M3LA4**	2860	2860	8330	9580	1880	244
96	207	2.5	14.8	12.0	**—**	**300 R2**	**BN100LA4**	**M3LA4**	2670	2670	7830	9000	1750	246
157	130	2.5	9.0	7.5	**300 L1**	**—**	**BN100LA4**	**M3LA4**	2260	2260	6750	7750	1490	244

P_1 = 3 kW

n_2 min^{-1}	M_{n2} Nm	f_S	i	P_t kW					Rn_2 [N] MC	MZ	HC/PC	HZ/PZ	FZ	
0.64	38491	1.3	2187	11.0	**313 L4**	**—**	**BN100LB4**	**—**	—	—	192000	231000	80000	360
0.67	36897	0.9	2096	11.0	**311 L4**	**—**	**BN100LB4**	**—**	—	—	157000	195000	65000	348
0.78	31977	1.8	1817	11.0	**313 L4**	**—**	**BN100LB4**	**—**	—	—	192000	231000	80000	360
0.80	31089	1.4	1766	11.0	**311 L4**	**—**	**BN100LB4**	**—**	—	—	157000	195000	65000	348
0.84	29565	1.2	1680	11.0	**311 L4**	**—**	**BN100LB4**	**—**	—	—	157000	195000	65000	348
0.94	26435	2.2	1502	11.0	**313 L4**	**—**	**BN100LB4**	**—**	—	—	192000	231000	80000	360
0.98	25307	1.0	1438	11.0	**310 L4**	**—**	**BN100LB4**	**—**	—	—	133000	166000	65000	336
1.0	24911	1.7	1415	11.0	**311 L4**	**—**	**BN100LB4**	**—**	—	—	157000	195000	65000	348
1.0	24533	2.1	1394	11.0	**313 L4**	**—**	**BN100LB4**	**—**	—	—	192000	229000	79900	360
1.1	22274	2.5	1266	11.0	**313 L4**	**—**	**BN100LB4**	**—**	—	—	188000	222500	77400	360
1.1	22158	1.2	1259	11.0	**310 L4**	**—**	**BN100LB4**	**—**	—	—	128500	161600	62700	336
1.1	21655	2.0	1230	11.0	**311 L4**	**—**	**BN100LB4**	**—**	—	—	150800	187900	62300	348
1.2	20491	1.4	1164	11.0	**310 L4**	**—**	**BN100LB4**	**—**	—	—	125500	157900	61100	336
1.3	19658	2.7	1117	11.0	**313 L4**	**—**	**BN100LB4**	**—**	—	—	181100	214300	74200	360
1.3	18628	2.3	1058	11.0	**311 L4**	**—**	**BN100LB4**	**—**	—	—	144200	179600	59200	348
1.4	17963	1.6	1021	11.0	**310 L4**	**—**	**BN100LB4**	**—**	—	—	120700	151800	58500	336
1.4	17584	1.0	999	7.5	**309 L4**	**—**	**BN100LB4**	**—**	—	—	101200	130500	32200	324
1.4	17352	2.4	986	11.0	**311 L4**	**—**	**BN100LB4**	**—**	—	—	141100	175800	57800	348
1.5	16524	2.0	939	11.0	**310 L4**	**—**	**BN100LB4**	**—**	—	—	117700	148000	56900	336
1.6	15951	1.0	906	7.5	**307 L4**	**—**	**BN100LB4**	**M3LB4**	43800	54900	94700	124200	38000	312
1.6	15951	1.1	906	7.5	**309 L4**	**—**	**BN100LB4**	**—**	—	—	98300	126800	31100	324
1.6	15905	2.9	904	11.0	**311 L4**	**—**	**BN100LB4**	**—**	—	—	137500	171300	56200	348
1.6	15807	1.5	898	15.0	**—**	**310 R4**	**BN100LB4**	**—**	—	—	116100	146000	56100	338
1.7	14393	1.9	818	11.0	**310 L4**	**—**	**BN100LB4**	**—**	—	—	112900	142000	54300	336
1.8	14090	0.9	801	7.5	**307 L4**	**—**	**BN100LB4**	**M3LB4**	42000	52700	91300	119600	36500	312
1.8	14090	1.3	801	7.5	**309 L4**	**—**	**BN100LB4**	**—**	—	—	94700	122100	29900	324
1.9	13319	2.0	757	15.0	**—**	**310 R4**	**BN100LB4**	**—**	—	—	110300	138700	52900	338
1.9	13132	2.3	746	22.0	**—**	**311 R4**	**BN100LB4**	**—**	—	—	129800	161700	52700	374
1.9	12773	2.1	726	11.0	**310 L4**	**—**	**BN100LB4**	**—**	—	—	108900	137000	52200	336
2.0	12711	1.2	722	7.5	**307 L4**	**—**	**BN100LB4**	**M3LB4**	41500	52100	90400	118400	36100	312
2.0	12711	1.7	722	7.5	**309 L4**	**—**	**BN100LB4**	**—**	—	—	91800	118400	28900	324
2.0	12140	1.2	690	15.0	**—**	**309 R4**	**BN100LB4**	**—**	—	—	90600	116800	28400	326
2.2	11502	1.1	654	7.5	**307 L4**	**—**	**BN100LB4**	**M3LB4**	40200	50400	87700	114900	34900	312
2.2	11502	1.6	654	7.5	**309 L4**	**—**	**BN100LB4**	**—**	—	—	89100	114900	27900	324
2.2	11240	1.9	639	15.0	**—**	**310 R4**	**BN100LB4**	**—**	—	—	104800	131800	50000	338
2.2	11205	2.4	637	11.0	**310 L4**	**—**	**BN100LB4**	**—**	—	—	104700	131700	50000	336
2.4	10378	2.1	590	15.0	**—**	**310 R4**	**BN100LB4**	**—**	—	—	102400	128700	48700	338

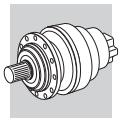

P_1 = 3 kW

n_2	M_{n2}	f_S	i	P_t					Rn_2 [N]					
min^{-1}	Nm			kW					MC	MZ	HC/PC	HZ/PZ	FZ	
2.4	10229	1.2	581	15.0	—	**307 R4**	**BN100LB4**	**M3LB4**	38600	48500	84700	110900	33600	314
2.4	10229	1.5	581	15.0	—	**309 R4**	**BN100LB4**	—	—	—	86000	110900	26900	326
2.4	10185	1.5	579	7.5	**307 L4**	—	**BN100LB4**	**M3LB4**	38600	48400	84500	110800	33500	312
2.4	10185	2.1	579	7.5	**309 L4**	—	**BN100LB4**	—	—	—	85900	110800	26800	324
2.7	9102	2.8	517	15.0	—	**310 R4**	**BN100LB4**	—	—	—	98400	123800	46600	338
2.8	8963	1.1	509	6.0	**306 L4**	—	**BN100LB4**	**M3LB4**	33300	37700	75600	88100	25000	300
2.8	8962	1.6	509	7.5	**307 L4**	—	**BN100LB4**	**M3LB4**	37000	46400	81400	106600	32100	312
2.8	8962	1.6	509	7.5	**309 L4**	—	**BN100LB4**	—	—	—	82700	106600	25700	324
2.8	8929	2.9	507	11.0	**310 L4**	—	**BN100LB4**	—	—	—	97900	123000	46300	336
2.9	8633	1.1	490	15.0	—	**307 R4**	**BN100LB4**	**M3LB4**	36500	45800	80500	105400	31700	314
2.9	8633	1.6	490	15.0	—	**309 R4**	**BN100LB4**	—	—	—	81700	105400	25400	326
2.9	8590	1.1	488	12.0	—	**306 R4**	**BN100LB4**	**M3LB4**	32800	37100	74700	87000	24600	302
3.0	8181	1.5	465	7.5	**307 L4**	—	**BN100LB4**	**M3LB4**	35800	45000	79200	103700	31200	312
3.0	8181	2.2	465	7.5	**309 L4**	—	**BN100LB4**	—	—	—	80400	103700	24900	324
3.1	8041	1.7	457	15.0	—	**309 R4**	**BN100LB4**	—	—	—	80000	103200	24800	326
3.1	7993	2.5	454	15.0	—	**310 R4**	**BN100LB4**	—	—	—	94700	119000	44700	338
3.1	7970	1.7	453	15.0	—	**307 R4**	**BN100LB4**	**M3LB4**	35500	44600	78600	102900	30900	314
3.2	7819	1.3	444	6.0	**306 L4**	—	**BN100LB4**	**M3LB4**	31800	36000	72600	84500	23900	300
3.4	7389	1.2	420	12.0	—	**306 R4**	**BN100LB4**	**M3LB4**	31200	35300	71400	83100	23400	302
3.4	7274	1.6	413	15.0	—	**307 R4**	**BN100LB4**	**M3LB4**	34500	43200	76400	100100	30000	314
3.4	7274	2.5	413	15.0	—	**309 R4**	**BN100LB4**	—	—	—	77700	100100	24000	326
3.5	7137	1.7	406	7.5	**307 L4**	—	**BN100LB4**	**M3LB4**	34300	43000	76000	99600	29800	312
3.5	7137	2.5	406	7.5	**309 L4**	—	**BN100LB4**	—	—	—	77200	99600	23800	324
3.6	6893	2.8	392	11.0	**310 L4**	—	**BN100LB4**	—	—	—	90500	113900	42500	336
3.6	6880	1.0	391	6.0	**306 L4**	—	**BN100LB4**	**M3LB4**	30400	34500	69900	81400	22900	300
3.6	6845	1.1	389	12.0	—	**306 R4**	**BN100LB4**	**M3LB4**	30400	34400	69800	81200	22800	302
3.8	6589	2.2	374	15.0	—	**309 R4**	**BN100LB4**	—	—	—	75400	97200	23200	326
3.9	6387	1.9	363	15.0	—	**307 R4**	**BN100LB4**	**M3LB4**	33000	41400	73500	96300	28700	314
4.0	6144	2.4	349	7.5	**307 L4**	—	**BN100LB4**	**M3LB4**	32600	40900	72700	95200	28300	312
4.2	6124	1.4	336	11.0	**307 L3**	—	**BN100LB4**	**M3LB4**	32200	40400	71900	94200	28000	312
4.2	6124	2.2	336	11.0	**309 L3**	—	**BN100LB4**	—	—	—	73000	94200	22400	324
4.3	5828	2.0	331	15.0	—	**307 R4**	**BN100LB4**	**M3LB4**	32000	40200	71500	93700	27800	314
4.3	5828	3.0	331	15.0	—	**309 R4**	**BN100LB4**	—	—	—	72700	93700	22300	326
4.3	5906	0.9	325	7.5	**306 L3**	—	**BN100LB4**	**M3LB4**	28600	32400	66100	76900	21500	300
4.5	5485	1.4	312	12.0	—	**306 R4**	**BN100LB4**	**M3LB4**	28200	32000	65300	76000	21200	302
4.7	5280	2.7	300	15.0	—	**307 R4**	**BN100LB4**	**M3LB4**	31000	38900	69400	91000	26900	314
4.9	5104	1.0	290	12.0	—	**305 R4**	**BN100LB4**	**M3LB4**	22100	25600	39100	47000	14200	278
4.9	5086	1.6	289	12.0	—	**306 R4**	**BN100LB4**	**M3LB4**	27500	31200	63800	74300	20700	302
4.9	5242	1.0	288	7.5	**306 L3**	—	**BN100LB4**	**M3LB4**	27500	31200	63700	74200	20700	300
5.0	5007	2.3	284	15.0	—	**307 R4**	**BN100LB4**	**M3LB4**	30400	38200	68300	89500	26500	314
5.0	5160	2.2	284	11.0	**307 L3**	—	**BN100LB4**	**M3LB4**	30400	38100	68300	89400	26400	312
5.3	4883	1.1	268	7.5	**306 L3**	—	**BN100LB4**	**M3LB4**	26900	30400	62400	72700	20200	300
5.7	4375	1.9	249	12.0	—	**306 R4**	**BN100LB4**	**M3LB4**	26200	29700	61000	71000	19700	302
5.9	4355	2.0	239	11.0	**307 L3**	—	**BN100LB4**	**M3LB4**	28700	36000	64900	85000	25000	312
5.9	4355	3.0	239	11.0	**309 L3**	—	**BN100LB4**	—	—	—	65900	85000	20000	324
5.9	4333	1.9	238	7.5	**306 L3**	—	**BN100LB4**	**M3LB4**	25800	29200	60200	70100	19400	300
6.1	4087	2.7	232	15.0	—	**307 R4**	**BN100LB4**	**M3LB4**	28400	35700	64300	84200	24700	314
6.1	4053	1.9	230	12.0	—	**306 R4**	**BN100LB4**	**M3LB4**	25500	28900	59600	69400	19200	302
6.4	4036	1.6	222	7.5	**306 L3**	—	**BN100LB4**	**M3LB4**	25200	28600	58900	68600	18900	300
6.4	4010	0.9	220	7.5	**304 L3**	—	**BN100LB4**	**M3LB4**	19700	22800	35200	42400	12700	288
6.4	4010	1.2	220	7.5	**305 L3**	—	**BN100LB4**	**M3LB4**	20200	23300	36000	43300	13000	288
6.6	3771	1.0	214	12.0	—	**304 R4**	**BN100LB4**	**M3LB4**	20000	23100	35700	42900	12800	278
6.6	3771	1.4	214	12.0	—	**305 R4**	**BN100LB4**	**M3LB4**	20000	23100	35700	42900	12800	278
6.6	3760	2.6	214	12.0	—	**306 R4**	**BN100LB4**	**M3LB4**	24900	28200	58300	67900	18700	302
6.9	3727	2.2	205	7.5	**306 L3**	—	**BN100LB4**	**M3LB4**	24500	27800	57600	67000	18400	300
7.0	3669	3.0	202	11.0	**307 L3**	—	**BN100LB4**	**M3LB4**	27100	34000	61600	80700	23600	312
7.4	3464	1.0	190	7.5	**305 L3**	—	**BN100LB4**	**M3LB4**	19200	22200	34400	41400	12300	288
7.4	3453	1.9	190	7.5	**306 L3**	—	**BN100LB4**	**M3LB4**	23900	27100	56200	65500	18000	300
7.6	3254	1.1	185	12.0	—	**304 R4**	**BN100LB4**	**M3LB4**	19100	22000	34100	41100	12200	278
7.6	3254	1.4	185	12.0	—	**305 R4**	**BN100LB4**	**M3LB4**	19100	22000	34100	41100	12200	278
7.8	3185	3.0	181	12.0	—	**306 R4**	**BN100LB4**	**M3LB4**	23600	26700	55500	64600	17700	302
7.9	3231	1.4	178	7.5	**305 L3**	—	**BN100LB4**	**M3LB4**	18800	21700	33700	40600	12100	288
8.4	2953	2.6	168	12.0	—	**306 R4**	**BN100LB4**	**M3LB4**	23000	26000	54200	63100	17300	302
8.6	2979	1.5	164	7.5	**305 L3**	—	**BN100LB4**	**M3LB4**	18300	21100	32900	39600	11700	288
8.9	2787	1.0	158	12.0	—	**303 R4**	**BN100LB4**	**M3LB4**	18100	20900	32600	39200	11600	266

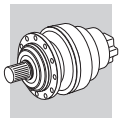

P_1 = 3 kW

n_2	M_{n2}	f_S	i	P_t					Rn_2 [N]					
min^{-1}	Nm			kW					MC	MZ	HC/PC	HZ/PZ	FZ	
8.9	2787	1.3	158	12.0	—	**304 R4**	**BN100LB4**	**M3LB4**	18100	20900	32600	39200	11600	278
8.9	2787	1.9	158	12.0	—	**305 R4**	**BN100LB4**	**M3LB4**	18100	20900	32600	39200	11600	278
9.2	2775	1.3	152	7.5	**305 L3**	—	**BN100LB4**	**M3LB4**	17900	20600	32200	38700	11500	288
9.3	2767	2.7	152	7.5	**306 L3**	—	**BN100LB4**	**M3LB4**	22200	25200	52600	61300	16700	300
9.4	2722	1.3	150	7.5	**304 L3**	—	**BN100LB4**	**M3LB4**	17800	20500	32000	38500	11400	288
9.5	2608	1.3	148	12.0	—	**304 R4**	**BN100LB4**	**M3LB4**	17700	20400	31900	38400	11400	278
9.5	2608	1.7	148	12.0	—	**305 R4**	**BN100LB4**	**M3LB4**	17700	20400	31900	38400	11400	278
9.8	2623	2.1	144	14.0	—	**306 R3**	**BN100LB4**	**M3LB4**	21800	24700	51800	60300	16400	302
10.0	2575	1.0	141	7.5	**303 L3**	—	**BN100LB4**	**M3LB4**	17400	20100	31500	37900	11200	264
10.0	2575	1.4	141	7.5	**304 L3**	—	**BN100LB4**	**M3LB4**	17400	20100	31500	37900	11200	288
10.0	2575	2.0	141	7.5	**305 L3**	—	**BN100LB4**	**M3LB4**	17400	20100	31500	37900	11200	288
10.8	2374	1.5	130	7.5	**304 L3**	—	**BN100LB4**	**M3LB4**	17000	19600	30700	37000	10900	288
10.9	2275	1.2	129	12.0	—	**303 R4**	**BN100LB4**	**M3LB4**	16900	19500	30600	36900	10800	266
10.9	2275	1.6	129	12.0	—	**304 R4**	**BN100LB4**	**M3LB4**	16900	19500	30600	36900	10800	278
10.9	2275	2.3	129	12.0	—	**305 R4**	**BN100LB4**	**M3LB4**	16900	19500	30600	36900	10800	278
11.3	2265	1.6	124	7.5	**305 L3**	—	**BN100LB4**	**M3LB4**	16700	19300	30300	36500	10700	288
11.6	2207	1.1	121	14.0	—	**304 R3**	**BN100LB4**	**M3LB4**	16600	19100	30100	36200	10600	278
11.8	2169	3.0	119	14.0	—	**306 R3**	**BN100LB4**	**M3LB4**	20500	23200	48900	57000	15400	302
12.3	2082	1.7	114	14.0	—	**305 R3**	**BN100LB4**	**M3LB4**	16200	18700	29500	35500	10400	278
12.5	2051	1.8	113	7.5	**305 L3**	—	**BN100LB4**	**M3LB4**	16200	18600	29400	35400	10400	288
12.8	2011	1.7	111	7.5	**304 L3**	—	**BN100LB4**	**M3LB4**	16000	18500	29200	35200	10300	288
12.9	1927	1.7	109	12.0	—	**304 R4**	**BN100LB4**	**M3LB4**	16000	18500	29200	35100	10300	278
13.3	1863	0.9	106	10.0	—	**301 R4**	**BN100LB4**	**M3LB4**	5030	5030	13800	15900	3310	256
13.5	1902	1.4	105	7.5	**303 L3**	—	**BN100LB4**	**M3LB4**	15800	18200	28800	34600	10100	264
13.5	1902	1.9	105	7.5	**304 L3**	—	**BN100LB4**	**M3LB4**	15800	18200	28800	34600	10100	288
13.5	1902	2.6	105	7.5	**305 L3**	—	**BN100LB4**	**M3LB4**	15800	18200	28800	34600	10100	288
14.5	1765	1.4	97.0	14.0	—	**304 R3**	**BN100LB4**	**M3LB4**	15400	17700	28100	33800	9860	278
15.4	1666	1.1	91.5	14.0	—	**303 R3**	**BN100LB4**	**M3LB4**	15100	17400	27600	33200	9670	266
15.4	1666	2.1	91.5	14.0	—	**305 R3**	**BN100LB4**	**M3LB4**	15100	17400	27600	33200	9670	278
15.6	1642	1.4	90.2	7.5	**303 L3**	—	**BN100LB4**	**M3LB4**	15000	17300	27500	33100	9620	264
15.6	1642	2.0	90.2	7.5	**304 L3**	—	**BN100LB4**	**M3LB4**	15000	17300	27500	33100	9620	288
15.6	1642	2.6	90.2	7.5	**305 L3**	—	**BN100LB4**	**M3LB4**	15000	17300	27500	33100	9620	288
15.8	1573	2.1	89.4	12.0	—	**304 R4**	**BN100LB4**	**M3LB4**	15000	17300	27400	33000	9590	278
16.5	1558	1.1	85.6	7.5	**301 L3**	—	**BN100LB4**	**M3LB4**	4790	4790	13300	15200	3150	254
17.9	1433	1.5	78.7	14.0	—	**303 R3**	**BN100LB4**	**M3LB4**	14300	16500	26400	31800	9190	266
17.9	1433	2.0	78.7	14.0	—	**304 R3**	**BN100LB4**	**M3LB4**	14300	16500	26400	31800	9190	278
17.9	1432	1.1	78.7	12.0	—	**301 R3**	**BN100LB4**	**M3LB4**	4660	4660	12900	14900	3060	256
18.2	1410	1.2	77.5	7.5	**301 L3**	—	**BN100LB4**	**M3LB4**	4640	4640	12900	14800	3050	254
18.3	1406	1.8	77.2	7.5	**303 L3**	—	**BN100LB4**	**M3LB4**	14200	16400	26300	31600	9140	264
18.3	1406	2.5	77.2	7.5	**304 L3**	—	**BN100LB4**	**M3LB4**	14200	16400	26300	31600	9140	288
19.2	1335	1.4	73.3	14.0	—	**303 R3**	**BN100LB4**	**M3LB4**	14000	16200	25900	31100	8980	266
19.2	1335	2.7	73.3	14.0	—	**305 R3**	**BN100LB4**	**M3LB4**	14000	16200	25900	31100	8980	278
19.5	1315	2.5	72.3	7.5	**304 L3**	—	**BN100LB4**	**M3LB4**	13900	16100	25700	31000	8940	288
19.5	1315	1.7	72.3	7.5	**303 L3**	—	**BN100LB4**	**M3LB4**	13900	16100	25700	31000	8940	264
20.2	1272	1.0	69.9	7.5	**301 L3**	—	**BN100LB4**	**M3LB4**	4480	4480	12500	14300	2950	254
20.7	1242	1.0	68.2	12.0	—	**301 R3**	**BN100LB4**	**M3LB4**	4440	4440	12400	14200	2920	256
21.8	1218	0.9	64.8	7.5	**301 L2**	—	**BN100LB4**	**M3LB4**	4370	4370	12200	14000	2870	254
22.3	1151	1.4	63.2	7.5	**301 L3**	—	**BN100LB4**	**M3LB4**	4330	4330	12100	13900	2850	254
22.4	1148	1.9	63.1	14.0	—	**303 R3**	**BN100LB4**	**M3LB4**	13300	15400	24700	29700	8540	266
22.4	1148	2.5	63.1	14.0	—	**304 R3**	**BN100LB4**	**M3LB4**	13300	15400	24700	29700	8540	278
22.4	1148	2.2	63.1	7.5	**303 L3**	—	**BN100LB4**	**M3LB4**	13300	15400	24700	29700	8540	264
22.4	1145	1.4	62.9	12.0	—	**301 R3**	**BN100LB4**	**M3LB4**	4330	4330	12100	13900	2840	256
23.8	1112	2.1	59.1	9.0	**304 L2**	—	**BN100LB4**	**M3LB4**	13000	15000	24200	29200	8360	288
25.3	1049	1.7	55.8	9.0	**303 L2**	—	**BN100LB4**	**M3LB4**	12800	14800	23800	28700	8200	264
26.0	986	1.8	54.2	14.0	—	**303 R3**	**BN100LB4**	**M3LB4**	12700	14600	23600	28400	8120	266
26.4	972	2.2	53.4	7.5	**303 L3**	—	**BN100LB4**	**M3LB4**	12600	14500	23500	28300	8080	264
27.2	976	1.3	51.9	7.5	**301 L2**	—	**BN100LB4**	**M3LB4**	4060	4060	11400	13100	2670	254
27.3	940	0.9	51.6	7.5	**300 L3**	—	**BN100LB4**	**M3LB4**	3960	3960	11200	12800	2600	244
27.3	940	1.7	51.6	7.5	**301 L3**	—	**BN100LB4**	**M3LB4**	4050	4050	11400	13100	2660	254
28.0	918	0.9	50.4	12.0	—	**300 R3**	**BN100LB4**	**M3LB4**	3930	3930	11100	12700	2580	246
28.0	918	1.8	50.4	12.0	—	**301 R3**	**BN100LB4**	**M3LB4**	4020	4020	11300	13000	2640	256
28.1	915	2.6	50.3	14.0	—	**303 R3**	**BN100LB4**	**M3LB4**	12300	14200	23100	27800	7920	266
29.8	890	2.7	47.3	9.0	**304 L2**	—	**BN100LB4**	**M3LB4**	12100	14000	22700	27300	7760	288
30	848	2.5	46.6	14.0	—	**303 R3**	**BN100LB4**	**M3LB4**	12000	13900	22600	27200	7720	266
32	839	2.2	44.6	9.0	**303 L2**	—	**BN100LB4**	**M3LB4**	11900	13700	22300	26800	7610	264

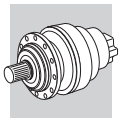

P_1 = 3 kW

n_2 min^{-1}	M_{n2} Nm	f_S	i	P_t kW					Rn_2 [N] MC	MZ	HC/PC	HZ/PZ	FZ	
33	775	2.7	42.6	14.0	—	**303 R3**	**BN100LB4**	**M3LB4**	11700	13500	22000	26400	7490	266
34	781	1.7	41.5	7.5	**301 L2**	—	**BN100LB4**	**M3LB4**	3770	3770	10700	12300	2480	254
34	749	1.7	41.2	12.0	—	**301 R3**	**BN100LB4**	**M3LB4**	3760	3760	10600	12200	2470	256
37	722	3.0	38.4	9.0	**303 L2**	—	**BN100LB4**	**M3LB4**	11300	13000	21300	25600	7240	264
37	721	1.2	38.4	7.5	**300 L2**	—	**BN100LB4**	**M3LB4**	3670	3670	10400	12000	2410	244
37	721	2.1	38.4	7.5	**301 L2**	—	**BN100LB4**	**M3LB4**	3670	3670	10400	12000	2410	254
38	678	1.2	37.3	12.0	—	**300 R3**	**BN100LB4**	**M3LB4**	3630	3630	10300	11900	2390	246
38	678	2.4	37.3	12.0	—	**301 R3**	**BN100LB4**	**M3LB4**	3630	3630	10300	11900	2390	256
39	672	2.7	35.8	9.0	**303 L2**	—	**BN100LB4**	**M3LB4**	10800	12400	20400	24600	6910	264
42	626	1.0	33.3	7.5	**300 L2**	—	**BN100LB4**	**M3LB4**	3420	3420	9790	11200	2250	244
42	626	2.1	33.3	7.5	**301 L2**	—	**BN100LB4**	**M3LB4**	3420	3420	9790	11200	2250	254
46	577	1.5	30.7	7.5	**300 L2**	—	**BN100LB4**	**M3LB4**	3330	3330	9550	11000	2190	244
46	577	2.7	30.7	7.5	**301 L2**	—	**BN100LB4**	**M3LB4**	3410	3410	9750	11200	2240	254
46	554	1.5	30.4	12.0	—	**300 R3**	**BN100LB4**	**M3LB4**	3400	3400	9730	11200	2230	246
46	554	2.9	30.4	12.0	—	**301 R3**	**BN100LB4**	**M3LB4**	3400	3400	9730	11200	2230	256
57	452	1.6	24.8	12.0	—	**300 R3**	**BN100LB4**	**M3LB4**	3170	3170	9150	10500	2090	246
57	466	1.8	24.8	18.0	—	**303 R2**	**BN100LB4**	**M3LB4**	9750	11300	18700	22500	6250	266
57	462	1.7	24.6	7.5	**300 L2**	—	**BN100LB4**	**M3LB4**	3160	3160	9130	10500	2080	244
70	377	1.7	20.1	7.5	**300 L2**	—	**BN100LB4**	**M3LB4**	2960	2960	8590	9870	1940	244
76	347	1.1	18.5	12.0	—	**300 R2**	**BN100LB4**	**M3LB4**	2870	2870	8370	9620	1890	246
76	347	2.1	18.5	12.0	—	**301 R2**	**BN100LB4**	**M3LB4**	2870	2870	8370	9620	1890	256
78	342	2.2	18.2	7.5	**300 L2**	—	**BN100LB4**	**M3LB4**	2860	2860	8330	9580	1880	244
95	279	2.6	14.8	7.5	**300 L2**	—	**BN100LB4**	**M3LB4**	2670	2670	7840	9010	1760	244
96	277	1.8	14.8	12.0	—	**300 R2**	**BN100LB4**	**M3LB4**	2670	2670	7830	9000	1750	246
116	228	3.0	12.1	7.5	**300 L2**	—	**BN100LB4**	**M3LB4**	2500	2500	7380	8480	1640	244
119	222	2.7	11.8	12.0	—	**300 R2**	**BN100LB4**	**M3LB4**	2480	2480	7330	8420	1630	246
157	175	1.8	9.0	7.5	**300 L1**	—	**BN100LB4**	**M3LB4**	2260	2260	6750	7750	1490	244
196	140	2.9	7.2	7.5	**300 L1**	—	**BN100LB4**	**M3LB4**	2100	2100	6310	7250	1380	244

P_1 = 4 kW

n_2 min^{-1}	M_{n2} Nm	f_S	i	P_t kW					Rn_2 [N] MC	MZ	HC/PC	HZ/PZ	FZ	
0.65	51963	0.9	2187	11.0	**313 L4**	—	**BN112M4**	—	—	—	192000	231000	80000	360
0.79	43169	1.3	1817	11.0	**313 L4**	—	**BN112M4**	—	—	—	192000	231000	80000	360
0.81	41970	1.0	1766	11.0	**311 L4**	—	**BN112M4**	—	—	—	157000	195000	65000	348
0.95	35687	1.6	1502	11.0	**313 L4**	—	**BN112M4**	—	—	—	192000	231000	80000	360
1.0	33630	1.3	1415	11.0	**311 L4**	—	**BN112M4**	—	—	—	157000	195000	65000	348
1.0	33119	1.6	1394	11.0	**313 L4**	—	**BN112M4**	—	—	—	192000	229000	79900	360
1.1	30069	1.9	1266	11.0	**313 L4**	—	**BN112M4**	—	—	—	188000	222500	77400	360
1.1	29913	0.9	1259	11.0	**310 L4**	—	**BN112M4**	—	—	—	128500	161600	62700	336
1.2	29234	1.5	1230	11.0	**311 L4**	—	**BN112M4**	—	—	—	150800	187900	62300	348
1.2	27663	1.1	1164	11.0	**310 L4**	—	**BN112M4**	—	—	—	125500	157900	61100	336
1.3	26538	2.0	1117	11.0	**313 L4**	—	**BN112M4**	—	—	—	181100	214300	74200	360
1.4	25148	1.7	1058	11.0	**311 L4**	—	**BN112M4**	—	—	—	144200	179600	59200	348
1.4	24249	1.2	1021	11.0	**310 L4**	—	**BN112M4**	—	—	—	120700	151800	58500	336
1.4	24094	2.3	1014	11.0	**313 L4**	—	**BN112M4**	—	—	—	175900	208200	71800	360
1.5	23425	1.8	986	11.0	**311 L4**	—	**BN112M4**	—	—	—	141100	175800	57800	348
1.5	22307	1.5	939	11.0	**310 L4**	—	**BN112M4**	—	—	—	117700	148000	56900	336
1.6	21472	2.2	904	11.0	**311 L4**	—	**BN112M4**	—	—	—	137500	171300	56200	348
1.6	21339	1.1	898	15.0	—	**310 R4**	**BN112M4**	—	—	—	116100	146000	56100	338
1.6	21130	2.5	889	11.0	**313 L4**	—	**BN112M4**	—	—	—	169100	200100	68800	360
1.7	19596	2.3	825	11.0	**311 L4**	—	**BN112M4**	—	—	—	133800	166600	54500	348
1.7	19431	1.4	818	11.0	**310 L4**	—	**BN112M4**	—	—	—	112900	142000	54300	336
1.8	19022	1.0	801	7.5	**309 L4**	—	**BN112M4**	—	—	—	94700	122100	29900	324
1.8	18768	2.8	790	11.0	**313 L4**	—	**BN112M4**	—	—	—	163200	193100	66100	360
1.8	18494	2.4	778	22.0	—	**313 R4**	**BN112M4**	—	—	—	162500	192300	65800	362
1.9	17980	1.5	757	15.0	—	**310 R4**	**BN112M4**	—	—	—	110300	138700	52900	338
1.9	17728	1.7	746	22.0	—	**311 R4**	**BN112M4**	—	—	—	129800	161700	52700	374
2.0	17244	1.6	726	11.0	**310 L4**	—	**BN112M4**	—	—	—	108900	137000	52200	336
2.0	17205	2.7	724	11.0	**311 L4**	—	**BN112M4**	—	—	—	128700	160300	52200	348
2.0	17160	1.2	722	7.5	**309 L4**	—	**BN112M4**	—	—	—	91800	118400	28900	324

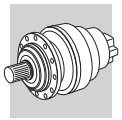

P_1 = 4 kW

n_2	M_{n2}	f_S	i	P_t					Rn_2 [N]					
min^{-1}	Nm			kW					MC	MZ	HC/PC	HZ/PZ	FZ	
2.1	16388	0.9	690	15.0	—	**309 R4**	**BN112M4**	—	—	—	90600	116800	28400	326
2.2	15527	1.2	654	7.5	**309 L4**	—	**BN112M4**	—	—	—	89100	114900	27900	324
2.2	15174	1.4	639	15.0	—	**310 R4**	**BN112M4**	—	—	—	104800	131800	50000	338
2.2	15126	1.8	637	11.0	**310 L4**	—	**BN112M4**	—	—	—	104700	131700	50000	336
2.3	14937	2.7	629	22.0	—	**311 R4**	**BN112M4**	—	—	—	123300	153600	49800	374
2.3	14890	2.7	627	11.0	**311 L4**	—	**BN112M4**	—	—	—	123200	153500	49700	348
2.4	14010	1.6	590	15.0	—	**310 R4**	**BN112M4**	—	—	—	102400	128700	48700	338
2.5	13809	0.9	581	15.0	—	**307 R4**	**BN112M4**	**M3LC4**	37700	47400	82900	108700	32800	314
2.5	13809	1.1	581	15.0	—	**309 R4**	**BN112M4**	—	—	—	86000	110900	26900	326
2.5	13750	1.1	579	7.5	**307 L4**	—	**BN112M4**	**M3LC4**	37700	47300	82800	108500	32800	312
2.5	13750	1.5	579	7.5	**309 L4**	—	**BN112M4**	—	—	—	85900	110800	26800	324
2.6	13208	2.4	556	11.0	**310 L4**	—	**BN112M4**	—	—	—	100600	126500	47800	336
2.8	12287	2.1	517	15.0	—	**310 R4**	**BN112M4**	—	—	—	98400	123800	46600	338
2.8	12099	1.2	509	7.5	**307 L4**	—	**BN112M4**	**M3LC4**	36100	45300	79700	104400	31400	312
2.8	12099	1.2	509	7.5	**309 L4**	—	**BN112M4**	—	—	—	82700	106600	25700	324
2.8	12054	2.1	507	11.0	**310 L4**	—	**BN112M4**	—	—	—	97900	123000	46300	336
2.9	11654	1.2	490	15.0	—	**309 R4**	**BN112M4**	—	—	—	81700	105400	25400	326
2.9	11639	3.0	490	22.0	—	**311 R4**	**BN112M4**	—	—	—	114400	142500	45800	374
3.1	11045	1.1	465	7.5	**307 L4**	—	**BN112M4**	**M3LC4**	35800	45000	79200	103700	31200	312
3.1	11045	1.7	465	7.5	**309 L4**	—	**BN112M4**	—	—	—	80400	103700	24900	324
3.1	10856	1.3	457	15.0	—	**309 R4**	**BN112M4**	—	—	—	80000	103200	24800	326
3.1	10791	1.9	454	15.0	—	**310 R4**	**BN112M4**	—	—	—	94700	119000	44700	338
3.2	10760	1.2	453	15.0	—	**307 R4**	**BN112M4**	**M3LC4**	34700	43600	76900	100800	30200	314
3.2	10708	2.8	451	11.0	**310 L4**	—	**BN112M4**	—	—	—	94400	118700	44500	336
3.2	10555	0.9	444	6.0	**306 L4**	—	**BN112M4**	**M3LC4**	31100	35200	71100	82800	23300	300
3.4	9963	2.9	419	15.0	—	**310 R4**	**BN112M4**	—	—	—	92400	116200	43500	338
3.5	9820	1.2	413	15.0	—	**307 R4**	**BN112M4**	**M3LC4**	34500	43200	76400	100100	30000	314
3.5	9820	1.8	413	15.0	—	**309 R4**	**BN112M4**	—	—	—	77700	100100	24000	326
3.5	9635	1.2	406	7.5	**307 L4**	—	**BN112M4**	**M3LC4**	34300	43000	76000	99600	29800	312
3.5	9635	1.8	406	7.5	**309 L4**	—	**BN112M4**	—	—	—	77200	99600	23800	324
3.7	9306	2.1	392	11.0	**310 L4**	—	**BN112M4**	—	—	—	90500	113900	42500	336
3.8	8895	1.6	374	15.0	—	**309 R4**	**BN112M4**	—	—	—	75400	97200	23200	326
3.9	8630	2.8	363	15.0	—	**310 R4**	**BN112M4**	—	—	—	88500	111300	41500	338
3.9	8622	1.4	363	15.0	—	**307 R4**	**BN112M4**	**M3LC4**	33000	41400	73500	96300	28700	314
4.1	8294	1.8	349	7.5	**307 L4**	—	**BN112M4**	**M3LC4**	32600	40900	72700	95200	28300	312
4.1	8294	2.6	349	7.5	**309 L4**	—	**BN112M4**	—	—	—	73800	95200	22700	324
4.3	8267	1.1	336	11.0	**307 L3**	—	**BN112M4**	**M3LC4**	32200	40400	71900	94200	28000	312
4.3	8267	1.6	336	11.0	**309 L3**	—	**BN112M4**	—	—	—	73000	94200	22400	324
4.3	7868	1.5	331	15.0	—	**307 R4**	**BN112M4**	**M3LC4**	32000	40200	71500	93700	27800	314
4.3	7868	2.2	331	15.0	—	**309 R4**	**BN112M4**	—	—	—	72700	93700	22300	326
4.6	7405	1.0	312	12.0	—	**306 R4**	**BN112M4**	**M3LC4**	28200	32000	65300	76000	21200	302
4.8	7127	2.0	300	15.0	—	**307 R4**	**BN112M4**	**M3LC4**	31000	38900	69400	91000	26900	314
4.9	6866	1.2	289	12.0	—	**306 R4**	**BN112M4**	**M3LC4**	27500	31200	63800	74300	20700	302
5.0	6759	1.7	284	15.0	—	**307 R4**	**BN112M4**	**M3LC4**	30400	38200	68300	89500	26500	314
5.0	6759	2.5	284	15.0	—	**309 R4**	**BN112M4**	—	—	—	69400	89500	21200	326
5.0	6966	1.6	284	11.0	**307 L3**	—	**BN112M4**	**M3LC4**	30400	38100	68300	89400	26400	312
5.0	6966	2.3	284	11.0	**309 L3**	—	**BN112M4**	—	—	—	69400	89400	21100	324
5.5	6131	2.4	258	15.0	—	**307 R4**	**BN112M4**	**M3LC4**	29500	37000	66400	87000	25600	314
5.5	6131	2.8	258	15.0	—	**309 R4**	**BN112M4**	—	—	—	67400	87000	20500	326
5.8	5906	1.4	249	12.0	—	**306 R4**	**BN112M4**	**M3LC4**	26200	29700	61000	71000	19700	302
6.0	5879	1.5	239	11.0	**307 L3**	—	**BN112M4**	**M3LC4**	28700	36000	64900	85000	25000	312
6.0	5879	2.2	239	11.0	**309 L3**	—	**BN112M4**	—	—	—	65900	85000	20000	324
6.0	5850	1.4	238	7.5	**306 L3**	—	**BN112M4**	**M3LC4**	25800	29200	60200	70100	19400	300
6.2	5517	2.0	232	15.0	—	**307 R4**	**BN112M4**	**M3LC4**	28400	35700	64300	84200	24700	314
6.2	5472	1.4	230	12.0	—	**306 R4**	**BN112M4**	**M3LC4**	25500	28900	59600	69400	19200	302
6.4	5476	2.4	223	11.0	**309 L3**	—	**BN112M4**	—	—	—	64500	83200	19500	324
6.4	5449	1.2	222	7.5	**306 L3**	—	**BN112M4**	**M3LC4**	25200	28600	58900	68600	18900	300
6.5	5428	2.3	221	11.0	**307 L3**	—	**BN112M4**	**M3LC4**	28000	35100	63300	83000	24300	312
6.7	5091	1.1	214	12.0	—	**305 R4**	**BN112M4**	**M3LC4**	20000	23100	35700	42900	12800	278
6.7	5076	1.9	214	12.0	—	**306 R4**	**BN112M4**	**M3LC4**	24900	28200	58300	67900	18700	302
7.0	4886	2.9	206	15.0	—	**307 R4**	**BN112M4**	**M3LC4**	27300	34300	62000	81200	23700	314
7.0	5032	1.6	205	7.5	**306 L3**	—	**BN112M4**	**M3LC4**	24500	27800	57600	67000	18400	300
7.1	4953	2.2	202	11.0	**307 L3**	—	**BN112M4**	**M3LC4**	27100	34000	61600	80700	23600	312
7.5	4661	1.4	190	7.5	**306 L3**	—	**BN112M4**	**M3LC4**	23900	27100	56200	65500	18000	300
7.7	4394	1.0	185	12.0	—	**305 R4**	**BN112M4**	**M3LC4**	19100	22000	34100	41100	12200	278

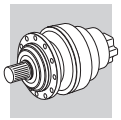

P_1 = 4 kW

n_2	M_{n2}	f_S	i	P_t					Rn_2 [N]					
min^{-1}	Nm			kW					MC	MZ	HC/PC	HZ/PZ	FZ	
7.9	4299	2.2	181	12.0	—	**306 R4**	**BN112M4**	**M3LC4**	23600	26700	55500	64600	17700	302
8.1	4362	1.0	178	7.5	**305 L3**	—	**BN112M4**	**M3LC4**	18800	21700	33700	40600	12100	288
8.1	4349	2.8	177	11.0	**307 L3**	—	**BN112M4**	**M3LC4**	26000	32600	59300	77700	22600	312
8.5	3987	1.9	168	12.0	—	**306 R4**	**BN112M4**	**M3LC4**	23000	26000	54200	63100	17300	302
8.7	4022	1.1	164	7.5	**305 L3**	—	**BN112M4**	**M3LC4**	18300	21100	32900	39600	11700	288
8.9	3969	2.7	162	11.0	**307 L3**	—	**BN112M4**	**M3LC4**	25200	31600	57700	75600	21900	312
9.0	3762	0.9	158	12.0	—	**304 R4**	**BN112M4**	**M3LC4**	18100	20900	32600	39200	11600	278
9.0	3762	1.4	158	12.0	—	**305 R4**	**BN112M4**	**M3LC4**	18100	20900	32600	39200	11600	278
9.1	3751	2.6	158	12.0	—	**306 R4**	**BN112M4**	**M3LC4**	22500	25500	53200	62000	16900	302
9.4	3747	1.0	152	7.5	**305 L3**	—	**BN112M4**	**M3LC4**	17900	20600	32200	38700	11500	288
9.4	3735	2.0	152	7.5	**306 L3**	—	**BN112M4**	**M3LC4**	22200	25200	52600	61300	16700	300
9.6	3674	0.9	150	7.5	**304 L3**	—	**BN112M4**	**M3LC4**	17800	20500	32000	38500	11400	288
9.7	3520	1.0	148	12.0	—	**304 R4**	**BN112M4**	**M3LC4**	17700	20400	31900	38400	11400	278
9.7	3520	1.3	148	12.0	—	**305 R4**	**BN112M4**	**M3LC4**	17700	20400	31900	38400	11400	278
9.9	3542	1.6	144	14.0	—	**306 R3**	**BN112M4**	**M3LC4**	21800	24700	51800	60300	16400	302
10.1	3476	1.0	141	7.5	**304 L3**	—	**BN112M4**	**M3LC4**	17400	20100	31500	37900	11200	288
10.1	3476	1.5	141	7.5	**305 L3**	—	**BN112M4**	**M3LC4**	17400	20100	31500	37900	11200	288
10.1	3464	2.3	141	7.5	**306 L3**	—	**BN112M4**	**M3LC4**	21700	24600	51500	59900	16300	300
11.0	3205	1.1	130	7.5	**304 L3**	—	**BN112M4**	**M3LC4**	17000	19600	30700	37000	10900	288
11.1	3071	1.1	129	12.0	—	**304 R4**	**BN112M4**	**M3LC4**	16900	19500	30600	36900	10800	278
11.1	3071	1.7	129	12.0	—	**305 R4**	**BN112M4**	**M3LC4**	16900	19500	30600	36900	10800	278
11.5	3058	1.2	124	7.5	**305 L3**	—	**BN112M4**	**M3LC4**	16700	19300	30300	36500	10700	288
11.8	2979	2.6	121	7.5	**306 L3**	—	**BN112M4**	**M3LC4**	20600	23400	49200	57300	15500	300
11.9	2942	2.9	120	22.0	—	**307 R3**	**BN112M4**	**M3LC4**	22800	28600	52700	69100	19800	314
12.0	2928	2.2	119	14.0	—	**306 R3**	**BN112M4**	**M3LC4**	20500	23200	48900	57000	15400	302
12.5	2811	1.3	114	14.0	—	**305 R3**	**BN112M4**	**M3LC4**	16200	18700	29500	35500	10400	278
12.7	2769	1.3	113	7.5	**305 L3**	—	**BN112M4**	**M3LC4**	16200	18600	29400	35400	10400	288
12.7	2760	2.7	112	7.5	**306 L3**	—	**BN112M4**	**M3LC4**	20100	22800	48100	56000	15100	300
12.9	2715	1.2	111	7.5	**304 L3**	—	**BN112M4**	**M3LC4**	16000	18500	29200	35200	10300	288
13.1	2601	1.3	109	12.0	—	**304 R4**	**BN112M4**	**M3LC4**	16000	18500	29200	35100	10300	278
13.7	2568	1.0	105	7.5	**303 L3**	—	**BN112M4**	**M3LC4**	15800	18200	28800	34600	10100	264
13.7	2568	1.4	105	7.5	**304 L3**	—	**BN112M4**	**M3LC4**	15800	18200	28800	34600	10100	288
13.7	2568	2.0	105	7.5	**305 L3**	—	**BN112M4**	**M3LC4**	15800	18200	28800	34600	10100	288
14.5	2420	2.7	98.5	14.0	—	**306 R3**	**BN112M4**	**M3LC4**	19200	21800	46200	53800	14400	302
14.7	2383	1.0	97.0	14.0	—	**304 R3**	**BN112M4**	**M3LC4**	15400	17700	28100	33800	9860	278
15.6	2248	1.6	91.5	14.0	—	**305 R3**	**BN112M4**	**M3LC4**	15100	17400	27600	33200	9670	278
15.9	2216	1.0	90.2	7.5	**303 L3**	—	**BN112M4**	**M3LC4**	15000	17300	27500	33100	9620	264
15.9	2216	1.5	90.2	7.5	**304 L3**	—	**BN112M4**	**M3LC4**	15000	17300	27500	33100	9620	288
15.9	2216	1.9	90.2	7.5	**305 L3**	—	**BN112M4**	**M3LC4**	15000	17300	27500	33100	9620	288
16.0	2124	1.6	89.4	12.0	—	**304 R4**	**BN112M4**	**M3LC4**	15000	17300	27400	33000	9590	278
18.2	1934	1.1	78.7	14.0	—	**303 R3**	**BN112M4**	**M3LC4**	14300	16500	26400	31800	9190	266
18.2	1934	1.5	78.7	14.0	—	**304 R3**	**BN112M4**	**M3LC4**	14300	16500	26400	31800	9190	278
18.2	1934	2.2	78.7	14.0	—	**305 R3**	**BN112M4**	**M3LC4**	14300	16500	26400	31800	9190	278
18.5	1898	1.3	77.2	7.5	**303 L3**	—	**BN112M4**	**M3LC4**	14200	16400	26300	31600	9140	264
18.5	1898	1.8	77.2	7.5	**304 L3**	—	**BN112M4**	**M3LC4**	14200	16400	26300	31600	9140	288
18.5	1898	2.5	77.2	7.5	**305 L3**	—	**BN112M4**	**M3LC4**	14200	16400	26300	31600	9140	288
19.5	1802	1.0	73.3	14.0	—	**303 R3**	**BN112M4**	**M3LC4**	14000	16200	25900	31100	8980	266
19.5	1802	2.0	73.3	14.0	—	**305 R3**	**BN112M4**	**M3LC4**	14000	16200	25900	31100	8980	278
19.8	1776	1.9	72.3	7.5	**304 L3**	—	**BN112M4**	**M3LC4**	13900	16100	25700	31000	8940	288
19.8	1776	1.3	72.3	7.5	**303 L3**	—	**BN112M4**	**M3LC4**	13900	16100	25700	31000	8940	264
19.8	1776	2.3	72.3	7.5	**305 L3**	—	**BN112M4**	**M3LC4**	13900	16100	25700	31000	8940	288
22.6	1554	1.1	63.2	7.5	**301 L3**	—	**BN112M4**	**M3LC4**	4330	4330	12100	13900	2850	254
22.7	1550	1.4	63.1	14.0	—	**303 R3**	**BN112M4**	**M3LC4**	13300	15400	24700	29700	8540	266
22.7	1550	1.8	63.1	14.0	—	**304 R3**	**BN112M4**	**M3LC4**	13300	15400	24700	29700	8540	278
22.7	1550	2.8	63.1	14.0	—	**305 R3**	**BN112M4**	**M3LC4**	13300	15400	24700	29700	8540	278
22.7	1549	1.6	63.1	7.5	**303 L3**	—	**BN112M4**	**M3LC4**	13300	15400	24700	29700	8540	264
22.7	1549	2.2	63.1	7.5	**304 L3**	—	**BN112M4**	**M3LC4**	13300	15400	24700	29700	8540	288
22.7	1546	1.1	62.9	12.0	—	**301 R3**	**BN112M4**	**M3LC4**	4330	4330	12100	13900	2840	256
24.2	1501	1.6	59.1	9.0	**304 L2**	—	**BN112M4**	**M3LC4**	13000	15000	24200	29200	8360	288
25.6	1416	1.3	55.8	9.0	**303 L2**	—	**BN112M4**	**M3LC4**	12800	14800	23800	28700	8200	264
25.6	1416	2.5	55.8	9.0	**305 L2**	—	**BN112M4**	**M3LC4**	12800	14800	23800	28700	8200	288
26.4	1331	1.4	54.2	14.0	—	**303 R3**	**BN112M4**	**M3LC4**	12700	14600	23600	28400	8120	266
26.4	1331	2.7	54.2	14.0	—	**305 R3**	**BN112M4**	**M3LC4**	12700	14600	23600	28400	8120	278
26.8	1312	1.7	53.4	7.5	**303 L3**	—	**BN112M4**	**M3LC4**	12600	14500	23500	28300	8080	264
26.8	1312	2.5	53.4	7.5	**304 L3**	—	**BN112M4**	**M3LC4**	12600	14500	23500	28300	8080	288

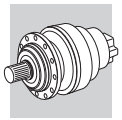

A

P_1 = 4 kW

n_2 min^{-1}	M_{n2} Nm	f_S	i	P_t kW					Rn_2 [N] MC	MZ	HC/PC	HZ/PZ	FZ	
27.5	1318	1.0	51.9	7.5	**301 L2**	—	**BN112M4**	**M3LC4**	4060	4060	11400	13100	2670	254
27.7	1269	1.3	51.6	7.5	**301 L3**	—	**BN112M4**	**M3LC4**	4050	4050	11400	13100	2660	254
28.4	1239	1.3	50.4	12.0	—	**301 R3**	**BN112M4**	**M3LC4**	4020	4020	11300	13000	2640	256
28.4	1235	1.9	50.3	14.0	—	**303 R3**	**BN112M4**	**M3LC4**	12300	14200	23100	27800	7920	266
28.4	1235	2.8	50.3	14.0	—	**304 R3**	**BN112M4**	**M3LC4**	12300	14200	23100	27800	7920	278
30	1201	2.0	47.3	9.0	**304 L2**	—	**BN112M4**	**M3LC4**	12100	14000	22700	27300	7760	288
31	1145	1.9	46.6	14.0	—	**303 R3**	**BN112M4**	**M3LC4**	12000	13900	22600	27200	7720	266
31	1145	2.5	46.6	14.0	—	**304 R3**	**BN112M4**	**M3LC4**	12000	13900	22600	27200	7720	278
32	1133	1.6	44.6	9.0	**303 L2**	—	**BN112M4**	**M3LC4**	11900	13700	22300	26800	7610	264
33	1071	3.0	43.6	7.5	**304 L3**	—	**BN112M4**	**M3LC4**	11800	13600	22100	26600	7550	288
34	1046	2.0	42.6	14.0	—	**303 R3**	**BN112M4**	**M3LC4**	11700	13500	22000	26400	7490	266
34	1054	1.2	41.5	7.5	**301 L2**	—	**BN112M4**	**M3LC4**	3770	3770	10700	12300	2480	254
35	1011	1.3	41.2	12.0	—	**301 R3**	**BN112M4**	**M3LC4**	3760	3760	10600	12200	2470	256
37	975	2.2	38.4	9.0	**303 L2**	—	**BN112M4**	**M3LC4**	11300	13000	21300	25600	7240	264
37	975	2.9	38.4	9.0	**304 L2**	—	**BN112M4**	**M3LC4**	11300	13000	21300	25600	7240	288
37	974	1.6	38.4	7.5	**301 L2**	—	**BN112M4**	**M3LC4**	3670	3670	10400	12000	2410	254
38	915	0.9	37.3	12.0	—	**300 R3**	**BN112M4**	**M3LC4**	3550	3550	10100	11600	2330	246
38	915	1.7	37.3	12.0	—	**301 R3**	**BN112M4**	**M3LC4**	3630	3630	10300	11900	2390	256
39	913	2.6	37.1	14.0	—	**303 R3**	**BN112M4**	**M3LC4**	11200	12900	21100	25400	7160	266
40	908	2.0	35.8	9.0	**303 L2**	—	**BN112M4**	**M3LC4**	11000	12700	20800	25100	7070	264
43	845	1.5	33.3	7.5	**301 L2**	—	**BN112M4**	**M3LC4**	3500	3500	9990	11500	2300	254
45	773	2.7	31.5	14.0	—	**303 R3**	**BN112M4**	**M3LC4**	10600	12200	20100	24100	6770	266
46	781	2.7	30.8	9.0	**303 L2**	—	**BN112M4**	**M3LC4**	10500	12100	19900	24000	6720	264
47	779	1.1	30.7	7.5	**300 L2**	—	**BN112M4**	**M3LC4**	3410	3410	9750	11200	2240	244
47	779	2.0	30.7	7.5	**301 L2**	—	**BN112M4**	**M3LC4**	3410	3410	9750	11200	2240	254
47	747	1.1	30.4	12.0	—	**300 R3**	**BN112M4**	**M3LC4**	3400	3400	9730	11200	2230	246
47	747	2.1	30.4	12.0	—	**301 R3**	**BN112M4**	**M3LC4**	3400	3400	9730	11200	2230	256
54	671	2.7	26.4	9.0	**303 L2**	—	**BN112M4**	**M3LC4**	9960	11500	19000	22900	6390	264
58	610	1.2	24.8	12.0	—	**300 R3**	**BN112M4**	**M3LC4**	3170	3170	9150	10500	2090	246
58	610	2.3	24.8	12.0	—	**301 R3**	**BN112M4**	**M3LC4**	3170	3170	9150	10500	2090	256
58	629	1.4	24.8	18.0	—	**303 R2**	**BN112M4**	**M3LC4**	9750	11300	18700	22500	6250	266
58	624	1.3	24.6	7.5	**300 L2**	—	**BN112M4**	**M3LC4**	3160	3160	9130	10500	2080	244
58	624	2.4	24.6	7.5	**301 L2**	—	**BN112M4**	**M3LC4**	3160	3160	9130	10500	2080	254
71	510	1.3	20.1	7.5	**300 L2**	—	**BN112M4**	**M3LC4**	2960	2960	8590	9870	1940	244
71	510	2.5	20.1	7.5	**301 L2**	—	**BN112M4**	**M3LC4**	2960	2960	8590	9870	1940	254
78	468	1.6	18.5	12.0	—	**301 R2**	**BN112M4**	**M3LC4**	2870	2870	8370	9620	1890	256
79	461	1.6	18.2	7.5	**300 L2**	—	**BN112M4**	**M3LC4**	2860	2860	8330	9580	1880	244
79	461	2.9	18.2	7.5	**301 L2**	—	**BN112M4**	**M3LC4**	2860	2860	8330	9580	1880	254
96	377	1.9	14.8	7.5	**300 L2**	—	**BN112M4**	**M3LC4**	2670	2670	7840	9010	1760	244
97	375	1.4	14.8	12.0	—	**300 R2**	**BN112M4**	**M3LC4**	2670	2670	7830	9000	1750	246
97	375	2.5	14.8	12.0	—	**301 R2**	**BN112M4**	**M3LC4**	2670	2670	7830	9000	1750	256
118	307	2.2	12.1	7.5	**300 L2**	—	**BN112M4**	**M3LC4**	2500	2500	7380	8480	1640	244
121	300	2.0	11.8	12.0	—	**300 R2**	**BN112M4**	**M3LC4**	2480	2480	7330	8420	1630	246
159	236	1.4	9.00	7.5	**300 L1**	—	**BN112M4**	**M3LC4**	2260	2260	6750	7750	1490	244
159	236	2.7	9.00	7.5	**301 L1**	—	**BN112M4**	**M3LC4**	2260	2260	6750	7750	1490	254
164	222	2.8	8.74	12.0	—	**300 R2**	**BN112M4**	**M3LC4**	2240	2240	6690	7690	1470	246
199	189	2.2	7.20	7.5	**300 L1**	—	**BN112M4**	**M3LC4**	2100	2100	6310	7250	1380	244

P_1 = 5.5 kW

n_2 min^{-1}	M_{n2} Nm	f_S	i	P_t kW					Rn_2 [N] MC	MZ	HC/PC	HZ/PZ	FZ	
0.76	59957	2.6	1893	18.0	**317 L4**	—	**BN132S4**	—	—	—	442000	470000	150000	406
0.79	57559	1.0	1817	11.0	**313 L4**	—	**BN132S4**	—	—	—	192000	231000	80000	360
0.80	57190	1.5	1805	18.0	**315 L4**	—	**BN132S4**	—	—	—	206000	243000	90000	384
0.80	56908	1.2	1796	15.0	**314 L4**	—	**BN132S4**	—	—	—	206000	243000	90000	372
0.96	47582	1.2	1502	11.0	**313 L4**	—	**BN132S4**	—	—	—	192000	231000	80000	360
0.96	47277	1.8	1492	18.0	**315 L4**	—	**BN132S4**	—	—	—	206000	243000	90000	384
0.97	47044	1.4	1485	15.0	**314 L4**	—	**BN132S4**	—	—	—	206000	243000	90000	372
1.0	44840	1.0	1415	11.0	**311 L4**	—	**BN132S4**	—	—	—	157000	195000	65000	348
1.0	44159	1.2	1394	11.0	**313 L4**	—	**BN132S4**	—	—	—	192000	229000	79900	360
1.1	40669	2.4	1284	18.0	**315 L4**	—	**BN132S4**	—	—	—	201500	236600	87400	384

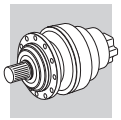

P_1 = 5.5 kW

n_2 min^{-1}	M_{n2} Nm	f_S	i	P_t kW					Rn_2 [N] MC	MZ	HC/PC	HZ/PZ	FZ	
1.1	40468	1.9	1277	15.0	**314 L4**	**—**	**BN132S4**	**—**	—	—	201200	236300	87300	372
1.1	40092	1.4	1266	11.0	**313 L4**	**—**	**BN132S4**	**—**	—	—	188000	222500	77400	360
1.2	38979	1.1	1230	11.0	**311 L4**	**—**	**BN132S4**	**—**	—	—	150800	187900	62300	348
1.3	35384	1.5	1117	11.0	**313 L4**	**—**	**BN132S4**	**—**	—	—	181100	214300	74200	360
1.3	34984	2.7	1104	18.0	**315 L4**	**—**	**BN132S4**	**—**	—	—	192600	226200	83200	384
1.3	34811	2.2	1099	15.0	**314 L4**	**—**	**BN132S4**	**—**	—	—	192400	225800	83000	372
1.4	33530	1.3	1058	11.0	**311 L4**	**—**	**BN132S4**	**—**	—	—	144200	179600	59200	348
1.4	32869	2.5	1038	15.0	**314 L4**	**—**	**BN132S4**	**—**	—	—	189100	222000	81400	372
1.4	32125	1.7	1014	11.0	**313 L4**	**—**	**BN132S4**	**—**	—	—	175900	208200	71800	360
1.5	31233	1.4	986	11.0	**311 L4**	**—**	**BN132S4**	**—**	—	—	141100	175800	57800	348
1.5	29743	1.1	939	11.0	**310 L4**	**—**	**BN132S4**	**—**	—	—	115300	145000	55600	336
1.6	29331	2.5	926	15.0	**314 L4**	**—**	**BN132S4**	**—**	—	—	182700	214500	78400	372
1.6	28807	2.7	909	40.0	**—**	**315 R4**	**BN132S4**	**—**	—	—	181700	213400	77900	386
1.6	28630	1.6	904	11.0	**311 L4**	**—**	**BN132S4**	**—**	—	—	137500	171300	56200	348
1.6	28174	1.9	889	11.0	**313 L4**	**—**	**BN132S4**	**—**	—	—	169100	200100	68800	360
1.7	27172	3.0	858	15.0	**314 L4**	**—**	**BN132S4**	**—**	—	—	178600	209700	76400	372
1.7	26127	1.7	825	11.0	**311 L4**	**—**	**BN132S4**	**—**	—	—	133800	166600	54500	348
1.8	25908	1.1	818	11.0	**310 L4**	**—**	**BN132S4**	**—**	—	—	112900	142000	54300	336
1.8	25024	2.1	790	11.0	**313 L4**	**—**	**BN132S4**	**—**	—	—	163200	193100	66100	360
1.9	24658	1.8	778	22.0	**—**	**313 R4**	**BN132S4**	**—**	—	—	162500	192300	65800	362
1.9	23973	1.1	757	15.0	**—**	**310 R4**	**BN132S4**	**—**	—	—	110300	138700	52900	338
1.9	23637	1.3	746	22.0	**—**	**311 R4**	**BN132S4**	**—**	—	—	129800	161700	52700	374
2.0	22992	1.2	726	11.0	**310 L4**	**—**	**BN132S4**	**—**	—	—	108900	137000	52200	336
2.0	22941	2.0	724	11.0	**311 L4**	**—**	**BN132S4**	**—**	—	—	128700	160300	52200	348
2.0	22879	0.9	722	7.5	**309 L4**	**—**	**BN132S4**	**—**	—	—	89900	116000	28200	324
2.1	22021	2.3	695	11.0	**313 L4**	**—**	**BN132S4**	**—**	—	—	157000	185900	63300	360
2.2	20485	2.5	647	22.0	**—**	**313 R4**	**BN132S4**	**—**	—	—	153700	181900	61800	362
2.3	20233	1.1	639	15.0	**—**	**310 R4**	**BN132S4**	**—**	—	—	104800	131800	50000	338
2.3	20168	1.3	637	11.0	**310 L4**	**—**	**BN132S4**	**—**	—	—	104700	131700	50000	336
2.3	20051	2.6	633	11.0	**313 L4**	**—**	**BN132S4**	**—**	—	—	152700	180700	61400	360
2.3	19916	2.0	629	22.0	**—**	**311 R4**	**BN132S4**	**—**	—	—	123300	153600	49800	374
2.3	19853	2.0	627	11.0	**311 L4**	**—**	**BN132S4**	**—**	—	—	123200	153500	49700	348
2.3	19443	3.0	614	22.0	**—**	**314 R4**	**BN132S4**	**—**	—	—	161500	189600	68400	374
2.4	18681	1.2	590	15.0	**—**	**310 R4**	**BN132S4**	**—**	—	—	102400	128700	48700	338
2.5	18333	1.2	579	7.5	**309 L4**	**—**	**BN132S4**	**—**	—	—	85900	110800	26800	324
2.5	17984	2.4	568	11.0	**311 L4**	**—**	**BN132S4**	**—**	—	—	119600	149000	48100	348
2.6	17611	1.8	556	11.0	**310 L4**	**—**	**BN132S4**	**—**	—	—	100600	126500	47800	336
2.7	16935	2.9	535	22.0	**—**	**313 R4**	**BN132S4**	**—**	—	—	145100	171800	58000	362
2.8	16464	2.3	520	22.0	**—**	**311 R4**	**BN132S4**	**—**	—	—	116500	145100	46700	374
2.8	16383	1.6	517	15.0	**—**	**310 R4**	**BN132S4**	**—**	—	—	98400	123800	46600	338
2.8	16273	3.0	514	11.0	**313 L4**	**—**	**BN132S4**	**—**	—	—	143400	169700	57300	360
2.8	16224	2.7	512	11.0	**311 L4**	**—**	**BN132S4**	**—**	—	—	116000	144500	46500	348
2.8	16072	1.6	507	11.0	**310 L4**	**—**	**BN132S4**	**—**	—	—	97900	123000	46300	336
2.9	15539	0.9	490	15.0	**—**	**309 R4**	**BN132S4**	**—**	—	—	80100	103300	24800	326
2.9	15519	2.2	490	22.0	**—**	**311 R4**	**BN132S4**	**—**	—	—	114400	142500	45800	374
3.1	14726	1.2	465	7.5	**309 L4**	**—**	**BN132S4**	**—**	—	—	80400	103700	24900	324
3.2	14474	1.0	457	15.0	**—**	**309 R4**	**BN132S4**	**—**	—	—	80000	103200	24800	326
3.2	14388	1.4	454	15.0	**—**	**310 R4**	**BN132S4**	**—**	—	—	94700	119000	44700	338
3.2	14347	0.9	453	15.0	**—**	**307 R4**	**BN132S4**	**M4SA4**	35500	44600	78600	102900	30900	314
3.2	14277	2.1	451	11.0	**310 L4**	**—**	**BN132S4**	**—**	—	—	94400	118700	44500	336
3.3	13873	2.7	438	22.0	**—**	**311 R4**	**BN132S4**	**—**	—	—	110600	137800	44100	374
3.4	13284	2.2	419	15.0	**—**	**310 R4**	**BN132S4**	**—**	—	—	92400	116200	43500	338
3.5	13093	0.9	413	15.0	**—**	**307 R4**	**BN132S4**	**M4SA4**	33700	42300	74900	98100	29300	314
3.5	13093	1.4	413	15.0	**—**	**309 R4**	**BN132S4**	**—**	—	—	77700	100100	24000	326
3.6	12847	0.9	406	7.5	**307 L4**	**—**	**BN132S4**	**M4SA4**	33500	42000	74400	97500	29100	312
3.6	12847	1.4	406	7.5	**309 L4**	**—**	**BN132S4**	**—**	—	—	77200	99600	23800	324
3.7	12407	1.6	392	11.0	**310 L4**	**—**	**BN132S4**	**—**	—	—	90500	113900	42500	336
3.8	11860	1.2	374	15.0	**—**	**309 R4**	**BN132S4**	**—**	—	—	75400	97200	23200	326
4.0	11507	2.1	363	15.0	**—**	**310 R4**	**BN132S4**	**—**	—	—	88500	111300	41500	338
4.0	11496	1.1	363	15.0	**—**	**307 R4**	**BN132S4**	**M4SA4**	33000	41400	73500	96300	28700	314
4.1	11482	1.7	350	18.0	**310 L3**	**—**	**BN132S4**	**—**	—	—	87600	110100	41000	336
4.1	11058	1.3	349	7.5	**307 L4**	**—**	**BN132S4**	**M4SA4**	32600	40900	72700	95200	28300	312
4.1	11058	1.9	349	7.5	**309 L4**	**—**	**BN132S4**	**—**	—	—	73800	95200	22700	324
4.3	11022	1.2	336	11.0	**309 L3**	**—**	**BN132S4**	**—**	—	—	73000	94200	22400	324
4.3	10586	2.6	334	15.0	**—**	**310 R4**	**BN132S4**	**—**	—	—	86300	108600	40300	338

A

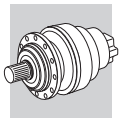

P_1 = 5.5 kW

n_2	M_{n2}	f_S	i	P_t					Rn_2 [N]					
min^{-1}	Nm			kW					MC	MZ	HC/PC	HZ/PZ	FZ	
4.3	10491	1.1	331	15.0	—	**307 R4**	**BN132S4**	**M4SA4**	32000	40200	71500	93700	27800	314
4.3	10491	1.6	331	15.0	—	**309 R4**	**BN132S4**	—	—	—	72700	93700	22300	326
4.7	9660	2.4	305	15.0	—	**310 R4**	**BN132S4**	—	—	—	84000	105600	39100	338
4.8	9503	1.5	300	15.0	—	**307 R4**	**BN132S4**	**M4SA4**	31000	38900	69400	91000	26900	314
4.9	9674	2.4	295	18.0	**310 L3**	—	**BN132S4**	—	—	—	83200	104600	38700	336
4.9	9539	2.8	291	18.0	**311 L3**	—	**BN132S4**	—	—	—	97900	121900	38500	348
5.0	9155	0.9	289	12.0	—	**306 R4**	**BN132S4**	**M4SA4**	26900	30500	62500	72800	20200	302
5.1	9012	1.3	284	15.0	—	**307 R4**	**BN132S4**	**M4SA4**	30400	38200	68300	89500	26500	314
5.1	9012	1.9	284	15.0	—	**309 R4**	**BN132S4**	—	—	—	69400	89500	21200	326
5.1	9287	1.2	284	11.0	**307 L3**	—	**BN132S4**	**M4SA4**	30400	38100	68300	89400	26400	312
5.1	9287	1.7	284	11.0	**309 L3**	—	**BN132S4**	—	—	—	69400	89400	21100	324
5.1	8967	2.9	283	15.0	—	**310 R4**	**BN132S4**	—	—	—	82100	103300	38100	338
5.6	8183	2.8	258	15.0	—	**310 R4**	**BN132S4**	—	—	—	79900	100500	37000	338
5.6	8175	1.8	258	15.0	—	**307 R4**	**BN132S4**	**M4SA4**	29500	37000	66400	87000	25600	314
5.6	8175	2.1	258	15.0	—	**309 R4**	**BN132S4**	—	—	—	67400	87000	20500	326
5.8	8165	2.3	249	18.0	**310 L3**	—	**BN132S4**	—	—	—	79100	99400	36600	336
5.8	7875	1.0	249	12.0	—	**306 R4**	**BN132S4**	**M4SA4**	26200	29700	61000	71000	19700	302
6.0	7838	1.1	239	11.0	**307 L3**	—	**BN132S4**	**M4SA4**	28700	36000	64900	85000	25000	312
6.0	7838	1.7	239	11.0	**309 L3**	—	**BN132S4**	—	—	—	65900	85000	20000	324
6.0	7800	1.0	238	7.5	**306 L3**	—	**BN132S4**	**M4SA4**	25800	29200	60200	70100	19400	300
6.2	7356	1.5	232	15.0	—	**307 R4**	**BN132S4**	**M4SA4**	28400	35700	64300	84200	24700	314
6.2	7356	2.3	232	15.0	—	**309 R4**	**BN132S4**	—	—	—	65300	84200	19800	326
6.3	7295	1.0	230	12.0	—	**306 R4**	**BN132S4**	**M4SA4**	25500	28900	59600	69400	19200	302
6.3	7539	2.8	230	18.0	**310 L3**	—	**BN132S4**	—	—	—	77200	97100	35600	336
6.5	7301	1.8	223	11.0	**309 L3**	—	**BN132S4**	—	—	—	64500	83200	19500	324
6.5	7237	1.8	221	11.0	**307 L3**	—	**BN132S4**	**M4SA4**	28000	35100	63300	83000	24300	312
6.7	6768	1.4	214	12.0	—	**306 R4**	**BN132S4**	**M4SA4**	24900	28200	58300	67900	18700	302
7.0	6514	2.2	206	15.0	—	**307 R4**	**BN132S4**	**M4SA4**	27300	34300	62000	81200	23700	314
7.0	6709	1.2	205	7.5	**306 L3**	—	**BN132S4**	**M4SA4**	24500	27800	57600	67000	18400	300
7.1	6604	1.7	202	11.0	**307 L3**	—	**BN132S4**	**M4SA4**	27100	34000	61600	80700	23600	312
7.1	6604	2.5	202	11.0	**309 L3**	—	**BN132S4**	—	—	—	62600	80700	18900	324
7.6	6041	2.3	191	15.0	—	**307 R4**	**BN132S4**	**M4SA4**	26600	33400	60600	79400	23200	314
7.6	6041	2.9	191	15.0	—	**309 R4**	**BN132S4**	—	—	—	61600	79400	18500	326
7.6	6215	1.0	190	7.5	**306 L3**	—	**BN132S4**	**M4SA4**	23900	27100	56200	65500	18000	300
7.9	5983	2.4	183	11.0	**309 L3**	—	**BN132S4**	—	—	—	60800	78400	18300	324
8.0	5733	1.6	181	12.0	—	**306 R4**	**BN132S4**	**M4SA4**	23600	26700	55500	64600	17700	302
8.1	5799	2.1	177	11.0	**307 L3**	—	**BN132S4**	**M4SA4**	26000	32600	59300	77700	22600	312
8.6	5316	1.4	168	12.0	—	**306 R4**	**BN132S4**	**M4SA4**	23000	26000	54200	63100	17300	302
8.9	5292	2.0	162	11.0	**307 L3**	—	**BN132S4**	**M4SA4**	25200	31600	57700	75600	21900	312
9.1	5016	1.1	158	12.0	—	**305 R4**	**BN132S4**	**M4SA4**	18100	20900	32600	39200	11600	278
9.1	5001	1.9	158	12.0	—	**306 R4**	**BN132S4**	**M4SA4**	22500	25500	53200	62000	16900	302
9.5	4980	1.5	152	7.5	**306 L3**	—	**BN132S4**	**M4SA4**	22200	25200	52600	61300	16700	300
9.7	4694	1.0	148	12.0	—	**305 R4**	**BN132S4**	**M4SA4**	17300	20000	31300	37600	11100	278
9.8	4794	2.8	146	11.0	**307 L3**	—	**BN132S4**	**M4SA4**	24400	30600	56000	73300	21200	312
10.0	4722	1.2	144	14.0	—	**306 R3**	**BN132S4**	**M4SA4**	21800	24700	51800	60300	16400	302
10.2	4634	1.1	141	7.5	**305 L3**	—	**BN132S4**	**M4SA4**	17400	20100	31500	37900	11200	288
10.2	4618	1.7	141	7.5	**306 L3**	—	**BN132S4**	**M4SA4**	21700	24600	51500	59900	16300	300
10.4	4546	2.4	139	11.0	**307 L3**	—	**BN132S4**	**M4SA4**	24000	30100	55100	72200	20800	312
11.1	4095	1.3	129	12.0	—	**305 R4**	**BN132S4**	**M4SA4**	16900	19500	30600	36900	10800	278
11.6	3929	2.8	124	15.0	—	**307 R4**	**BN132S4**	**M4SA4**	24800	31100	56900	74500	21600	314
11.9	3973	2.0	121	7.5	**306 L3**	—	**BN132S4**	**M4SA4**	20600	23400	49200	57300	15500	300
12.0	3923	2.2	120	22.0	—	**307 R3**	**BN132S4**	**M4SA4**	22800	28600	52700	69100	19800	314
12.1	3904	1.7	119	14.0	—	**306 R3**	**BN132S4**	**M4SA4**	20500	23200	48900	57000	15400	302
12.6	3747	1.0	114	14.0	—	**305 R3**	**BN132S4**	**M4SA4**	16200	18700	29500	35500	10400	278
12.7	3711	2.8	113	11.0	**307 L3**	—	**BN132S4**	**M4SA4**	22400	28100	51800	67900	19500	312
12.8	3691	1.0	113	7.5	**305 L3**	—	**BN132S4**	**M4SA4**	16200	18600	29400	35400	10400	288
12.8	3680	2.0	112	7.5	**306 L3**	—	**BN132S4**	**M4SA4**	20100	22800	48100	56000	15100	300
13.0	3620	0.9	111	7.5	**304 L3**	—	**BN132S4**	**M4SA4**	16000	18500	29200	35200	10300	288
13.2	3469	1.0	109	12.0	—	**304 R4**	**BN132S4**	—	16000	18500	29200	35100	10300	278
13.8	3424	1.0	105	7.5	**304 L3**	—	**BN132S4**	**M4SA4**	15800	18200	28800	34600	10100	288
13.8	3424	1.5	105	7.5	**305 L3**	—	**BN132S4**	**M4SA4**	15800	18200	28800	34600	10100	288
13.8	3414	2.6	104	7.5	**306 L3**	—	**BN132S4**	**M4SA4**	19600	22200	47000	54700	14700	300
14.5	3243	2.6	99.0	22.0	—	**307 R3**	**BN132S4**	**M4SA4**	21400	26900	49800	65200	18600	314
14.6	3227	2.0	98.5	14.0	—	**306 R3**	**BN132S4**	**M4SA4**	19200	21800	46200	53800	14400	302
15.7	2998	1.2	91.5	14.0	—	**305 R3**	**BN132S4**	**M4SA4**	15100	17400	27600	33200	9670	278

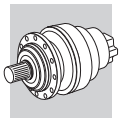

P_1 = 5.5 kW

n_2	M_{n2}	f_S	i	P_t					Rn_2 [N]					
min^{-1}	Nm			kW					MC	MZ	HC/PC	HZ/PZ	FZ	
16.0	2955	1.1	90.2	7.5	**304 L3**	**—**	**BN132S4**	**M4SA4**	15000	17300	27500	33100	9620	288
16.0	2955	1.4	90.2	7.5	**305 L3**	**—**	**BN132S4**	**M4SA4**	15000	17300	27500	33100	9620	288
16.1	2831	1.2	89.4	12.0	**—**	**304 R4**	**BN132S4**	**—**	15000	17300	27400	33000	9590	278
16.3	2892	3.0	88.3	7.5	**306 L3**	**—**	**BN132S4**	**M4SA4**	18500	21000	44700	52100	13900	300
17.0	2776	2.7	84.7	14.0	**—**	**306 R3**	**BN132S4**	**M4SA4**	18300	20700	44200	51400	13700	302
17.6	2681	2.6	81.9	7.5	**306 L3**	**—**	**BN132S4**	**M4SA4**	18100	20500	43700	50900	13600	300
18.3	2579	1.1	78.7	14.0	**—**	**304 R3**	**BN132S4**	**—**	14300	16500	26400	31800	9190	278
18.3	2579	1.7	78.7	14.0	**—**	**305 R3**	**BN132S4**	**M4SA4**	14300	16500	26400	31800	9190	278
18.6	2530	1.0	77.2	7.5	**303 L3**	**—**	**BN132S4**	**M4SA4**	14200	16400	26300	31600	9140	264
18.6	2530	1.4	77.2	7.5	**304 L3**	**—**	**BN132S4**	**M4SA4**	14200	16400	26300	31600	9140	288
18.6	2530	1.9	77.2	7.5	**305 L3**	**—**	**BN132S4**	**M4SA4**	14200	16400	26300	31600	9140	288
19.6	2402	1.5	73.3	14.0	**—**	**305 R3**	**BN132S4**	**M4SA4**	14000	16200	25900	31100	8980	278
19.9	2453	2.2	72.5	13.0	**306 L2**	**—**	**BN132S4**	**M4SA4**	17400	19700	42100	49100	13000	300
19.9	2368	1.4	72.3	7.5	**304 L3**	**—**	**BN132S4**	**M4SA4**	13900	16100	25700	31000	8940	288
19.9	2368	0.9	72.3	7.5	**303 L3**	**—**	**BN132S4**	**M4SA4**	13600	15700	25200	30300	8730	264
19.9	2368	1.8	72.3	7.5	**305 L3**	**—**	**BN132S4**	**M4SA4**	13600	15700	25200	30300	8730	288
22.8	2066	1.1	63.1	14.0	**—**	**303 R3**	**BN132S4**	**—**	13300	15400	24700	29700	8540	266
22.8	2066	1.4	63.1	14.0	**—**	**304 R3**	**BN132S4**	**—**	13300	15400	24700	29700	8540	278
22.8	2066	2.1	63.1	14.0	**—**	**305 R3**	**BN132S4**	**M4SA4**	13300	15400	24700	29700	8540	278
22.8	2066	1.2	63.1	7.5	**303 L3**	**—**	**BN132S4**	**M4SA4**	13300	15400	24700	29700	8540	264
22.8	2066	1.7	63.1	7.5	**304 L3**	**—**	**BN132S4**	**M4SA4**	13300	15400	24700	29700	8540	288
22.8	2066	2.3	63.1	7.5	**305 L3**	**—**	**BN132S4**	**M4SA4**	13300	15400	24700	29700	8540	288
24.3	2001	1.2	59.1	9.0	**304 L2**	**—**	**BN132S4**	**M4SA4**	13000	15000	24200	29200	8360	288
25.6	1903	2.7	56.3	13.0	**306 L2**	**—**	**BN132S4**	**M4SA4**	16000	18100	39100	45500	12000	300
25.8	1888	1.0	55.8	9.0	**303 L2**	**—**	**BN132S4**	**M4SA4**	12800	14800	23800	28700	8200	264
25.8	1888	1.9	55.8	9.0	**305 L2**	**—**	**BN132S4**	**M4SA4**	12800	14800	23800	28700	8200	288
26.6	1775	1.0	54.2	14.0	**—**	**303 R3**	**BN132S4**	**—**	12700	14600	23600	28400	8120	266
26.6	1775	2.0	54.2	14.0	**—**	**305 R3**	**BN132S4**	**M4SA4**	12700	14600	23600	28400	8120	278
27.0	1750	1.2	53.4	7.5	**303 L3**	**—**	**BN132S4**	**M4SA4**	12600	14500	23500	28300	8080	264
27.0	1750	1.8	53.4	7.5	**304 L3**	**—**	**BN132S4**	**M4SA4**	12600	14500	23500	28300	8080	288
27.0	1750	2.3	53.4	7.5	**305 L3**	**—**	**BN132S4**	**M4SA4**	12600	14500	23500	28300	8080	288
27.9	1691	1.0	51.6	7.5	**301 L3**	**—**	**BN132S4**	**M4SA4**	3960	3960	11200	12800	2600	254
28.6	1652	1.0	50.4	12.0	**—**	**301 R3**	**BN132S4**	**—**	3930	3930	11100	12700	2580	256
28.6	1647	1.4	50.3	14.0	**—**	**303 R3**	**BN132S4**	**—**	12300	14200	23100	27800	7920	266
28.6	1647	2.1	50.3	14.0	**—**	**304 R3**	**BN132S4**	**—**	12300	14200	23100	27800	7920	278
28.6	1647	2.7	50.3	14.0	**—**	**305 R3**	**BN132S4**	**M4SA4**	12300	14200	23100	27800	7920	278
30	1601	1.5	47.3	9.0	**304 L2**	**—**	**BN132S4**	**M4SA4**	12100	14000	22700	27300	7760	288
31	1527	1.4	46.6	14.0	**—**	**303 R3**	**BN132S4**	**—**	12000	13900	22600	27200	7720	266
31	1527	1.9	46.6	14.0	**—**	**304 R3**	**BN132S4**	**—**	12000	13900	22600	27200	7720	278
31	1527	2.8	46.6	14.0	**—**	**305 R3**	**BN132S4**	**M4SA4**	12000	13900	22600	27200	7720	278
32	1511	1.2	44.6	9.0	**303 L2**	**—**	**BN132S4**	**M4SA4**	11900	13700	22300	26800	7610	264
32	1511	2.4	44.6	9.0	**305 L2**	**—**	**BN132S4**	**M4SA4**	11900	13700	22300	26800	7610	288
33	1428	2.2	43.6	7.5	**304 L3**	**—**	**BN132S4**	**M4SA4**	11800	13600	22100	26600	7550	288
34	1395	1.5	42.6	14.0	**—**	**303 R3**	**BN132S4**	**—**	11700	13500	22000	26400	7490	266
34	1395	2.3	42.6	14.0	**—**	**304 R3**	**BN132S4**	**—**	11700	13500	22000	26400	7490	278
34	1395	2.7	42.6	14.0	**—**	**305 R3**	**BN132S4**	**M4SA4**	11700	13500	22000	26400	7490	278
35	1406	0.9	41.5	7.5	**301 L2**	**—**	**BN132S4**	**M4SA4**	3770	3770	10700	12300	2480	254
35	1348	1.0	41.2	12.0	**—**	**301 R3**	**BN132S4**	**—**	3760	3760	10600	12200	2470	256
38	1299	1.7	38.4	9.0	**303 L2**	**—**	**BN132S4**	**M4SA4**	11300	13000	21300	25600	7240	264
38	1299	2.2	38.4	9.0	**304 L2**	**—**	**BN132S4**	**M4SA4**	11300	13000	21300	25600	7240	288
38	1298	1.2	38.4	7.5	**301 L2**	**—**	**BN132S4**	**M4SA4**	3670	3670	10400	12000	2410	254
39	1221	1.3	37.3	12.0	**—**	**301 R3**	**BN132S4**	**—**	3630	3630	10300	11900	2390	256
39	1217	2.0	37.1	14.0	**—**	**303 R3**	**BN132S4**	**—**	11200	12900	21100	25400	7160	266
39	1217	2.8	37.1	14.0	**—**	**304 R3**	**BN132S4**	**—**	11200	12900	21100	25400	7160	278
40	1210	1.5	35.8	9.0	**303 L2**	**—**	**BN132S4**	**M4SA4**	11000	12700	20800	25100	7070	264
40	1210	2.9	35.8	9.0	**305 L2**	**—**	**BN132S4**	**M4SA4**	11000	12700	20800	25100	7070	288
43	1126	1.2	33.3	7.5	**301 L2**	**—**	**BN132S4**	**M4SA4**	3500	3500	9990	11500	2300	254
46	1031	2.0	31.5	14.0	**—**	**303 R3**	**BN132S4**	**—**	10600	12200	20100	24100	6770	266
46	1031	3.0	31.5	14.0	**—**	**304 R3**	**BN132S4**	**—**	10600	12200	20100	24100	6770	278
47	1041	2.1	30.8	9.0	**303 L2**	**—**	**BN132S4**	**M4SA4**	10500	12100	19900	24000	6720	264
47	1041	2.7	30.8	9.0	**304 L2**	**—**	**BN132S4**	**M4SA4**	10500	12100	19900	24000	6720	288
47	1039	1.5	30.7	7.5	**301 L2**	**—**	**BN132S4**	**M4SA4**	3410	3410	9750	11200	2240	254
47	996	1.6	30.4	12.0	**—**	**301 R3**	**BN132S4**	**—**	3400	3400	9730	11200	2230	256
54	894	2.0	26.4	9.0	**303 L2**	**—**	**BN132S4**	**M4SA4**	9960	11500	19000	22900	6390	264
56	841	2.4	25.7	14.0	**—**	**303 R3**	**BN132S4**	**—**	9870	11400	18900	22700	6330	266

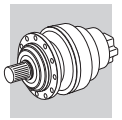

A

P_1 = 5.5 kW

n_2 min^{-1}	M_{n2} Nm	f_S	i	P_t kW					Rn_2 [N] MC	MZ	HC/PC	HZ/PZ	FZ	
58	813	1.7	24.8	12.0	—	**301 R3**	**BN132S4**	—	3170	3170	9150	10500	2090	256
58	838	1.0	24.8	18.0	—	**303 R2**	**BN132S4**	**M4SA4**	9750	11300	18700	22500	6250	266
59	832	1.0	24.6	7.5	**300 L2**	—	**BN132S4**	**M4SA4**	3090	3090	8940	10300	2030	244
59	832	1.8	24.6	7.5	**301 L2**	—	**BN132S4**	**M4SA4**	3160	3160	9130	10500	2080	254
59	830	2.6	24.5	9.0	**303 L2**	—	**BN132S4**	**M4SA4**	9720	11200	18600	22400	6230	264
63	769	2.7	22.7	9.0	**303 L2**	—	**BN132S4**	**M4SA4**	9470	10900	18200	21900	6080	264
69	703	2.6	20.8	9.0	**303 L2**	—	**BN132S4**	**M4SA4**	9190	10600	17700	21300	5900	264
72	679	0.9	20.1	7.5	**300 L2**	—	**BN132S4**	**M4SA4**	2960	2960	8590	9870	1940	244
72	679	1.9	20.1	7.5	**301 L2**	—	**BN132S4**	**M4SA4**	2960	2960	8590	9870	1940	254
75	650	2.4	19.2	18.0	—	**303 R2**	**BN132S4**	**M4SA4**	8960	10300	17300	20800	5750	266
78	624	1.2	18.5	12.0	—	**301 R2**	**BN132S4**	**M4SA4**	2870	2870	8370	9620	1890	256
79	615	1.2	18.2	7.5	**300 L2**	—	**BN132S4**	**M4SA4**	2860	2860	8330	9580	1880	244
79	615	2.2	18.2	7.5	**301 L2**	—	**BN132S4**	**M4SA4**	2860	2860	8330	9580	1880	254
97	502	1.4	14.8	7.5	**300 L2**	—	**BN132S4**	**M4SA4**	2670	2670	7840	9010	1760	244
97	502	2.5	14.8	7.5	**301 L2**	—	**BN132S4**	**M4SA4**	2670	2670	7840	9010	1760	254
98	499	1.0	14.8	12.0	—	**300 R2**	**BN132S4**	**M4SA4**	2670	2670	7830	9000	1750	246
98	499	1.9	14.8	12.0	—	**301 R2**	**BN132S4**	**M4SA4**	2670	2670	7830	9000	1750	256
119	410	1.7	12.1	7.5	**300 L2**	—	**BN132S4**	**M4SA4**	2500	2500	7380	8480	1640	244
119	410	3.0	12.1	7.5	**301 L2**	—	**BN132S4**	**M4SA4**	2500	2500	7380	8480	1640	254
122	400	1.5	11.8	12.0	—	**300 R2**	**BN132S4**	**M4SA4**	2480	2480	7330	8420	1630	246
122	400	2.9	11.8	12.0	—	**301 R2**	**BN132S4**	**M4SA4**	2480	2480	7330	8420	1630	256
149	338	2.2	9.67	11.0	**303 L1**	—	**BN132S4**	**M4SA4**	7120	8220	14100	16900	4570	264
160	314	1.0	9.00	7.5	**300 L1**	—	**BN132S4**	**M4SA4**	2260	2260	6750	7750	1490	244
160	314	2.0	9.00	7.5	**301 L1**	—	**BN132S4**	**M4SA4**	2260	2260	6750	7750	1490	254
165	296	2.1	8.74	12.0	—	**300 R2**	**BN132S4**	**M4SA4**	2240	2240	6690	7690	1470	246
200	251	1.6	7.20	7.5	**300 L1**	—	**BN132S4**	**M4SA4**	2100	2100	6310	7250	1380	244
200	251	3.0	7.20	7.5	**301 L1**	—	**BN132S4**	**M4SA4**	2100	2100	6310	7250	1380	254
202	241	2.4	7.13	12.0	—	**300 R2**	**BN132S4**	**M4SA4**	2090	2090	6300	7230	1380	246
250	201	2.3	5.77	7.5	**300 L1**	—	**BN132S4**	**M4SA4**	1950	1950	5910	6790	1280	244

P_1 = 7.5 kW

n_2 min^{-1}	M_{n2} Nm	f_S	i	P_t kW					Rn_2 [N] MC	MZ	HC/PC	HZ/PZ	FZ	
0.76	83274	1.9	1893	18.0	**317 L4**	—	**BN132MA4**	—	—	—	442000	470000	150000	406
0.80	79431	1.1	1805	18.0	**315 L4**	—	**BN132MA4**	—	—	—	206000	243000	90000	384
0.90	70166	2.4	1595	18.0	**317 L4**	—	**BN132MA4**	—	—	—	442000	470000	150000	406
0.96	65663	1.3	1492	18.0	**315 L4**	—	**BN132MA4**	—	—	—	206000	243000	90000	384
0.97	65339	1.0	1485	15.0	**314 L4**	—	**BN132MA4**	—	—	—	206000	243000	90000	372
1.1	58004	2.9	1318	18.0	**317 L4**	—	**BN132MA4**	—	—	—	434300	462400	147000	406
1.1	56484	1.7	1284	18.0	**315 L4**	—	**BN132MA4**	—	—	—	201500	236600	87400	384
1.1	56205	1.4	1277	15.0	**314 L4**	—	**BN132MA4**	—	—	—	201200	236300	87300	372
1.1	55684	1.0	1266	11.0	**313 L4**	—	**BN132MA4**	—	—	—	188000	222500	77400	360
1.2	54449	2.2	1237	18.0	**316 L4**	—	**BN132MA4**	—	—	—	331400	368600	144000	396
1.3	49144	1.1	1117	11.0	**313 L4**	—	**BN132MA4**	—	—	—	181100	214300	74200	360
1.3	48588	2.0	1104	18.0	**315 L4**	—	**BN132MA4**	—	—	—	192600	226200	83200	384
1.3	48349	1.6	1099	15.0	**314 L4**	—	**BN132MA4**	—	—	—	192400	225800	83000	372
1.4	46570	0.9	1058	11.0	**311 L4**	—	**BN132MA4**	—	—	—	141200	175900	57900	348
1.4	45878	2.2	1043	18.0	**315 L4**	—	**BN132MA4**	—	—	—	189400	222300	81600	384
1.4	45878	2.9	1043	18.0	**316 L4**	—	**BN132MA4**	—	—	—	314800	350100	136000	396
1.4	45651	1.8	1038	15.0	**314 L4**	—	**BN132MA4**	—	—	—	189100	222000	81400	372
1.4	44619	1.2	1014	11.0	**313 L4**	—	**BN132MA4**	—	—	—	175900	208200	71800	360
1.5	43379	1.0	986	11.0	**311 L4**	—	**BN132MA4**	—	—	—	141100	175800	57800	348
1.5	40915	2.3	930	18.0	**315 L4**	—	**BN132MA4**	—	—	—	183000	214800	78500	384
1.6	40738	1.8	926	15.0	**314 L4**	—	**BN132MA4**	—	—	—	182700	214500	78400	372
1.6	40010	1.9	909	40.0	—	**315 R4**	**BN132MA4**	—	—	—	181700	213400	77900	386
1.6	39764	1.2	904	11.0	**311 L4**	—	**BN132MA4**	—	—	—	137500	171300	56200	348
1.6	39130	1.4	889	11.0	**313 L4**	—	**BN132MA4**	—	—	—	169100	200100	68800	360
1.7	37926	2.7	862	18.0	**315 L4**	—	**BN132MA4**	—	—	—	178800	210000	76600	384
1.7	37738	2.2	858	15.0	**314 L4**	—	**BN132MA4**	—	—	—	178600	209700	76400	372
1.7	36288	1.2	825	11.0	**311 L4**	—	**BN132MA4**	—	—	—	133800	166600	54500	348
1.8	34755	1.5	790	11.0	**313 L4**	—	**BN132MA4**	—	—	—	163200	193100	66100	360

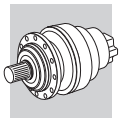

P_1 = 7.5 kW

n_2 min^{-1}	M_{n2} Nm	f_S	i	P_t kW					Rn_2 [N] MC	MZ	HC/PC	HZ/PZ	FZ	
1.8	34417	2.6	782	40.0	—	**315 R4**	**BN132MA4**	—	—	—	173700	203900	74100	386
1.9	34248	1.3	778	22.0	—	**313 R4**	**BN132MA4**	—	—	—	162500	192300	65800	362
1.9	32829	0.9	746	22.0	—	**311 R4**	**BN132MA4**	—	—	—	129800	161700	52700	374
2.0	32463	2.5	738	15.0	**314 L4**	—	**BN132MA4**	—	—	—	170700	200400	72700	372
2.0	31862	1.5	724	11.0	**311 L4**	—	**BN132MA4**	—	—	—	128700	160300	52200	348
2.1	30585	1.7	695	11.0	**313 L4**	—	**BN132MA4**	—	—	—	157000	185900	63300	360
2.2	29407	2.7	668	15.0	**314 L4**	—	**BN132MA4**	—	—	—	165700	194500	70300	372
2.2	28452	1.8	647	22.0	—	**313 R4**	**BN132MA4**	—	—	—	153700	181900	61800	362
2.3	28012	0.9	637	11.0	**310 L4**	—	**BN132MA4**	—	—	—	104700	131700	50000	336
2.3	27848	1.9	633	11.0	**313 L4**	—	**BN132MA4**	—	—	—	152700	180700	61400	360
2.3	27662	1.4	629	22.0	—	**311 R4**	**BN132MA4**	—	—	—	123300	153600	49800	374
2.3	27574	1.4	627	11.0	**311 L4**	—	**BN132MA4**	—	—	—	123200	153500	49700	348
2.3	27005	2.1	614	22.0	—	**314 R4**	**BN132MA4**	—	—	—	161500	189600	68400	374
2.5	24978	1.7	568	11.0	**311 L4**	—	**BN132MA4**	—	—	—	119600	149000	48100	348
2.6	24805	2.2	564	11.0	**313 L4**	—	**BN132MA4**	—	—	—	147500	174500	59100	360
2.6	24460	1.3	556	11.0	**310 L4**	—	**BN132MA4**	—	—	—	100600	126500	47800	336
2.7	23520	2.1	535	22.0	—	**313 R4**	**BN132MA4**	—	—	—	145100	171800	58000	362
2.7	23230	3.0	528	22.0	—	**314 R4**	**BN132MA4**	—	—	—	154400	181300	65000	374
2.8	22867	1.7	520	22.0	—	**311 R4**	**BN132MA4**	—	—	—	116500	145100	46700	374
2.8	22754	1.1	517	15.0	—	**310 R4**	**BN132MA4**	—	—	—	98400	123800	46600	338
2.8	22601	2.2	514	11.0	**313 L4**	—	**BN132MA4**	—	—	—	143400	169700	57300	360
2.8	22533	2.0	512	11.0	**311 L4**	—	**BN132MA4**	—	—	—	116000	144500	46500	348
2.8	22322	1.1	507	11.0	**310 L4**	—	**BN132MA4**	—	—	—	97900	123000	46300	336
2.9	21828	2.4	496	22.0	—	**313 R4**	**BN132MA4**	—	—	—	141900	168000	56600	362
2.9	21555	1.6	490	22.0	—	**311 R4**	**BN132MA4**	—	—	—	114400	142500	45800	374
3.2	19983	1.0	454	15.0	—	**310 R4**	**BN132MA4**	—	—	—	94700	119000	44700	338
3.2	19876	2.7	452	11.0	**313 L4**	—	**BN132MA4**	—	—	—	138000	163300	54900	360
3.2	19829	1.5	451	11.0	**310 L4**	—	**BN132MA4**	—	—	—	94400	118700	44500	336
3.2	19818	2.4	450	22.0	—	**313 R4**	**BN132MA4**	—	—	—	137900	163200	54800	362
3.3	19268	1.9	438	22.0	—	**311 R4**	**BN132MA4**	—	—	—	110600	137800	44100	374
3.4	18450	1.6	419	15.0	—	**310 R4**	**BN132MA4**	—	—	—	92400	116200	43500	338
3.5	18184	1.0	413	15.0	—	**309 R4**	**BN132MA4**	—	—	—	77700	100100	24000	326
3.5	18162	2.2	413	22.0	—	**311 R4**	**BN132MA4**	—	—	—	108700	135400	43300	374
3.5	18055	2.3	410	11.0	**311 L4**	—	**BN132MA4**	—	—	—	108500	135200	43200	348
3.6	17843	1.0	406	7.5	**309 L4**	—	**BN132MA4**	—	—	—	77200	99600	23800	324
3.7	17233	1.1	392	11.0	**310 L4**	—	**BN132MA4**	—	—	—	90500	113900	42500	336
3.7	17048	2.7	387	22.0	—	**313 R4**	**BN132MA4**	—	—	—	131800	156000	52100	362
4.0	15982	1.5	363	15.0	—	**310 R4**	**BN132MA4**	—	—	—	88500	111300	41500	338
4.1	15947	1.2	350	18.0	**310 L3**	—	**BN132MA4**	—	—	—	87600	110100	41000	336
4.1	15359	1.0	349	7.5	**307 L4**	—	**BN132MA4**	**M4LA4**	31800	40000	71200	93300	27700	312
4.1	15359	1.4	349	7.5	**309 L4**	—	**BN132MA4**	—	—	—	73800	95200	22700	324
4.1	15294	2.6	348	11.0	**311 L4**	—	**BN132MA4**	—	—	—	103200	128600	40900	348
4.2	15014	2.6	341	22.0	—	**311 R4**	**BN132MA4**	—	—	—	102700	127900	40600	374
4.3	14702	1.9	334	15.0	—	**310 R4**	**BN132MA4**	—	—	—	86300	108600	40300	338
4.3	14571	1.2	331	15.0	—	**309 R4**	**BN132MA4**	—	—	—	72700	93700	22300	326
4.5	14152	2.8	322	22.0	—	**311 R4**	**BN132MA4**	—	—	—	100900	125600	39800	374
4.7	13417	1.7	305	15.0	—	**310 R4**	**BN132MA4**	—	—	—	84000	105600	39100	338
4.7	13821	2.8	304	18.0	**313 L3**	—	**BN132MA4**	—	—	—	122500	145000	48100	360
4.8	13199	1.1	300	15.0	—	**307 R4**	**BN132MA4**	**M4LA4**	31000	38900	69400	91000	26900	314
4.9	13437	1.7	295	18.0	**310 L3**	—	**BN132MA4**	—	—	—	83200	104600	38700	336
4.9	12915	2.9	294	22.0	—	**311 R4**	**BN132MA4**	—	—	—	98100	122200	38600	374
4.9	13248	2.0	291	18.0	**311 L3**	—	**BN132MA4**	—	—	—	97900	121900	38500	348
5.1	12517	0.9	284	15.0	—	**307 R4**	**BN132MA4**	**M4LA4**	29700	37300	66900	87700	25900	314
5.1	12517	1.4	284	15.0	—	**309 R4**	**BN132MA4**	—	—	—	69400	89500	21200	326
5.1	12899	1.2	284	11.0	**309 L3**	—	**BN132MA4**	—	—	—	69400	89400	21100	324
5.1	12454	2.1	283	15.0	—	**310 R4**	**BN132MA4**	—	—	—	82100	103300	38100	338
5.6	11365	2.0	258	15.0	—	**310 R4**	**BN132MA4**	—	—	—	79900	100500	37000	338
5.6	11354	1.3	258	15.0	—	**307 R4**	**BN132MA4**	**M4LA4**	29500	37000	66400	87000	25600	314
5.6	11354	1.5	258	15.0	—	**309 R4**	**BN132MA4**	—	—	—	67400	87000	20500	326
5.8	11340	1.6	249	18.0	**310 L3**	—	**BN132MA4**	—	—	—	79100	99400	36600	336
6.0	10886	1.2	239	11.0	**309 L3**	—	**BN132MA4**	—	—	—	65900	85000	20000	324
6.2	10295	2.4	234	15.0	—	**310 R4**	**BN132MA4**	—	—	—	77600	97600	35800	338
6.2	10217	1.1	232	15.0	—	**307 R4**	**BN132MA4**	**M4LA4**	28400	35700	64300	84200	24700	314
6.2	10217	1.6	232	15.0	—	**309 R4**	**BN132MA4**	—	—	—	65300	84200	19800	326
6.3	10470	2.0	230	18.0	**310 L3**	—	**BN132MA4**	—	—	—	77200	97100	35600	336

A

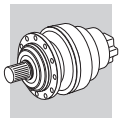

P_1 = 7.5 kW

n_2	M_{n2}	f_S	i	P_t					Rn_2 [N]					
min^{-1}	Nm			kW					MC	MZ	HC/PC	HZ/PZ	FZ	
6.5	10141	1.3	223	11.0	**309 L3**	**—**	**BN132MA4**	**—**	—	—	64500	83200	19500	324
6.5	10051	1.3	221	11.0	**307 L3**	**—**	**BN132MA4**	**M4LA4**	28000	35100	63300	83000	24300	312
6.7	9399	1.0	214	12.0	**—**	**306 R4**	**BN132MA4**	**M4LA4**	24900	28200	58300	67900	18700	302
7.0	9057	2.4	206	15.0	**—**	**310 R4**	**BN132MA4**	**—**	—	—	74700	93900	34300	338
7.0	9048	1.6	206	15.0	**—**	**307 R4**	**BN132MA4**	**M4LA4**	27300	34300	62000	81200	23700	314
7.0	9048	2.2	206	15.0	**—**	**309 R4**	**BN132MA4**	**—**	—	—	63000	81200	19000	326
7.1	9182	2.4	202	18.0	**310 L3**	**—**	**BN132MA4**	**—**	—	—	74200	93300	34100	336
7.1	9173	1.2	202	11.0	**307 L3**	**—**	**BN132MA4**	**M4LA4**	27100	34000	61600	80700	23600	312
7.1	9173	1.8	202	11.0	**309 L3**	**—**	**BN132MA4**	**—**	—	—	62600	80700	18900	324
7.6	8390	1.7	191	15.0	**—**	**307 R4**	**BN132MA4**	**M4LA4**	26600	33400	60600	79400	23200	314
7.6	8390	2.1	191	15.0	**—**	**309 R4**	**BN132MA4**	**—**	—	—	61600	79400	18500	326
7.6	8331	2.8	189	15.0	**—**	**310 R4**	**BN132MA4**	**—**	—	—	72800	91500	33400	338
7.9	8309	1.7	183	11.0	**309 L3**	**—**	**BN132MA4**	**—**	—	—	60800	78400	18300	324
8.0	7962	1.2	181	12.0	**—**	**306 R4**	**BN132MA4**	**M4LA4**	23600	26700	55500	64600	17700	302
8.1	8064	2.3	177	18.0	**310 L3**	**—**	**BN132MA4**	**—**	—	—	71400	89800	32600	336
8.1	8054	1.5	177	11.0	**307 L3**	**—**	**BN132MA4**	**M4LA4**	26000	32600	59300	77700	22600	312
8.6	7383	1.0	168	12.0	**—**	**306 R4**	**BN132MA4**	**M4LA4**	23000	26000	54200	63100	17300	302
8.7	7268	2.2	165	15.0	**—**	**309 R4**	**BN132MA4**	**—**	—	—	59000	76100	17700	326
8.8	7445	3.0	164	18.0	**310 L3**	**—**	**BN132MA4**	**—**	—	—	69700	87600	31800	336
8.9	7350	1.5	162	11.0	**307 L3**	**—**	**BN132MA4**	**M4LA4**	25200	31600	57700	75600	21900	312
8.9	7350	2.2	162	11.0	**309 L3**	**—**	**BN132MA4**	**—**	—	—	58600	75600	17500	324
9.1	6946	1.4	158	12.0	**—**	**306 R4**	**BN132MA4**	**M4LA4**	22500	25500	53200	62000	16900	302
9.5	6917	1.1	152	7.5	**306 L3**	**—**	**BN132MA4**	**M4LA4**	22200	25200	52600	61300	16700	300
9.5	6686	2.8	152	15.0	**—**	**309 R4**	**BN132MA4**	**—**	—	—	57500	74200	17200	326
9.8	6658	2.0	146	11.0	**307 L3**	**—**	**BN132MA4**	**M4LA4**	24400	30600	56000	73300	21200	312
10.2	6414	1.2	141	7.5	**306 L3**	**—**	**BN132MA4**	**M4LA4**	21700	24600	51500	59900	16300	300
10.4	6314	1.7	139	11.0	**307 L3**	**—**	**BN132MA4**	**M4LA4**	24000	30100	55100	72200	20800	312
10.4	6314	2.5	139	11.0	**309 L3**	**—**	**BN132MA4**	**—**	—	—	56000	72200	16700	324
11.1	5687	0.9	129	12.0	**—**	**305 R4**	**BN132MA4**	**M4LA4**	16900	19500	30600	36900	10800	278
11.4	5727	2.3	126	11.0	**307 L3**	**—**	**BN132MA4**	**M4LA4**	23200	29100	53500	70100	20200	312
11.4	5727	2.9	126	11.0	**309 L3**	**—**	**BN132MA4**	**—**	—	—	54400	70100	16100	324
11.6	5458	2.0	124	15.0	**—**	**307 R4**	**BN132MA4**	**M4LA4**	24800	31100	56900	74500	21600	314
11.9	5517	1.4	121	7.5	**306 L3**	**—**	**BN132MA4**	**M4LA4**	20600	23400	49200	57300	15500	300
12.0	5449	1.6	120	22.0	**—**	**307 R3**	**BN132MA4**	**M4LA4**	22800	28600	52700	69100	19800	314
12.0	5449	2.4	120	22.0	**—**	**309 R3**	**BN132MA4**	**—**	—	—	53600	69100	15900	326
12.1	5422	1.2	119	14.0	**—**	**306 R3**	**BN132MA4**	**M4LA4**	20500	23200	48900	57000	15400	302
12.7	5154	2.0	113	11.0	**307 L3**	**—**	**BN132MA4**	**M4LA4**	22400	28100	51800	67900	19500	312
12.8	5111	1.4	112	7.5	**306 L3**	**—**	**BN132MA4**	**M4LA4**	20100	22800	48100	56000	15100	300
13.7	4623	2.9	105	15.0	**—**	**307 R4**	**BN132MA4**	**M4LA4**	24100	30300	55400	72700	21000	314
13.8	4756	1.1	105	7.5	**305 L3**	**—**	**BN132MA4**	**M4LA4**	15800	18200	28800	34600	10100	288
13.8	4741	1.9	104	7.5	**306 L3**	**—**	**BN132MA4**	**M4LA4**	19600	22200	47000	54700	14700	300
14.4	4564	2.7	100	11.0	**307 L3**	**—**	**BN132MA4**	**M4LA4**	21500	27000	50000	65500	18700	312
14.5	4504	1.9	99.0	22.0	**—**	**307 R3**	**BN132MA4**	**M4LA4**	21400	26900	49800	65200	18600	314
14.5	4504	2.8	99.0	22.0	**—**	**309 R3**	**BN132MA4**	**—**	—	—	50600	65200	14900	326
14.6	4482	1.4	98.5	14.0	**—**	**306 R3**	**BN132MA4**	**M4LA4**	19200	21800	46200	53800	14400	302
15.5	4232	2.9	93.0	11.0	**307 L3**	**—**	**BN132MA4**	**M4LA4**	21000	26300	48900	64000	18200	312
16.0	4104	1.0	90.2	7.5	**305 L3**	**—**	**BN132MA4**	**M4LA4**	15000	17300	27500	33100	9620	288
16.3	4016	2.1	88.3	7.5	**306 L3**	**—**	**BN132MA4**	**M4LA4**	18500	21000	44700	52100	13900	300
17.0	3856	2.0	84.7	14.0	**—**	**306 R3**	**BN132MA4**	**M4LA4**	18300	20700	44200	51400	13700	302
17.3	3795	2.7	83.4	22.0	**—**	**307 R3**	**BN132MA4**	**M4LA4**	20200	25400	47300	62000	17600	314
17.6	3724	1.9	81.9	7.5	**306 L3**	**—**	**BN132MA4**	**M4LA4**	18100	20500	43700	50900	13600	300
17.9	3666	2.8	80.6	11.0	**307 L3**	**—**	**BN132MA4**	**M4LA4**	20000	25100	46800	61300	17400	312
18.3	3582	1.2	78.7	14.0	**—**	**305 R3**	**BN132MA4**	**M4LA4**	14300	16500	26400	31800	9190	278
18.6	3514	1.0	77.2	7.5	**304 L3**	**—**	**BN132MA4**	**M4LA4**	14200	16400	26300	31600	9140	288
18.6	3514	1.4	77.2	7.5	**305 L3**	**—**	**BN132MA4**	**M4LA4**	14200	16400	26300	31600	9140	288
18.7	3504	2.4	77.0	7.5	**306 L3**	**—**	**BN132MA4**	**M4LA4**	17700	20100	42900	50000	13300	300
19.6	3336	1.1	73.3	14.0	**—**	**305 R3**	**BN132MA4**	**M4LA4**	14000	16200	25900	31100	8980	278
19.8	3317	2.2	72.9	14.0	**—**	**306 R3**	**BN132MA4**	**M4LA4**	17400	19700	42200	49200	13100	302
19.9	3407	1.6	72.5	13.0	**306 L2**	**—**	**BN132MA4**	**M4LA4**	17400	19700	42100	49100	13000	300
19.9	3289	1.0	72.3	7.5	**304 L3**	**—**	**BN132MA4**	**M4LA4**	13900	16100	25700	31000	8940	288
19.9	3289	1.3	72.3	7.5	**305 L3**	**—**	**BN132MA4**	**M4LA4**	13900	16100	25700	31000	8940	288
21.3	3072	2.3	67.5	14.0	**—**	**306 R3**	**BN132MA4**	**M4LA4**	17000	19200	41300	48000	12700	302
22.1	2968	2.5	65.2	7.5	**306 L3**	**—**	**BN132MA4**	**M4LA4**	16800	19000	40800	47500	12600	300
22.8	2870	1.0	63.1	14.0	**—**	**304 R3**	**BN132MA4**	**—**	13300	15400	24700	29700	8540	278
22.8	2870	1.5	63.1	14.0	**—**	**305 R3**	**BN132MA4**	**M4LA4**	13300	15400	24700	29700	8540	278

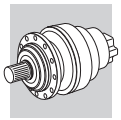

P_1 = 7.5 kW

n_2	M_{n2}	f_S	i	P_t					Rn_2 [N]					
min^{-1}	Nm			kW					MC	MZ	HC/PC	HZ/PZ	FZ	
22.8	2869	1.2	63.1	7.5	**304 L3**	**—**	**BN132MA4**	**M4LA4**	13300	15400	24700	29700	8540	288
22.8	2869	1.6	63.1	7.5	**305 L3**	**—**	**BN132MA4**	**M4LA4**	13300	15400	24700	29700	8540	288
24.8	2643	2.9	58.1	14.0	**—**	**306 R3**	**BN132MA4**	**M4LA4**	16100	18300	39400	45900	12100	302
25.6	2644	2.0	56.3	13.0	**306 L2**	**—**	**BN132MA4**	**M4LA4**	16000	18100	39100	45500	12000	300
25.8	2623	1.3	55.8	9.0	**305 L2**	**—**	**BN132MA4**	**M4LA4**	12800	14800	23800	28700	8200	288
26.6	2465	1.4	54.2	14.0	**—**	**305 R3**	**BN132MA4**	**M4LA4**	12700	14600	23600	28400	8120	278
27.0	2430	1.3	53.4	7.5	**304 L3**	**—**	**BN132MA4**	**M4LA4**	12600	14500	23500	28300	8080	288
27.0	2430	1.6	53.4	7.5	**305 L3**	**—**	**BN132MA4**	**M4LA4**	12600	14500	23500	28300	8080	288
27.0	2423	2.9	53.2	7.5	**306 L3**	**—**	**BN132MA4**	**M4LA4**	15700	17800	38400	44700	11800	300
28.6	2287	1.0	50.3	14.0	**—**	**303 R3**	**BN132MA4**	**—**	12300	14200	23100	27800	7920	266
28.6	2287	1.5	50.3	14.0	**—**	**304 R3**	**BN132MA4**	**—**	12300	14200	23100	27800	7920	278
28.6	2287	1.9	50.3	14.0	**—**	**305 R3**	**BN132MA4**	**M4LA4**	12300	14200	23100	27800	7920	278
30	2224	1.1	47.3	9.0	**304 L2**	**—**	**BN132MA4**	**M4LA4**	12100	14000	22700	27300	7760	288
31	2121	1.0	46.6	14.0	**—**	**303 R3**	**BN132MA4**	**—**	12000	13900	22600	27200	7720	266
31	2121	1.3	46.6	14.0	**—**	**304 R3**	**BN132MA4**	**—**	12000	13900	22600	27200	7720	278
31	2121	2.0	46.6	14.0	**—**	**305 R3**	**BN132MA4**	**M4LA4**	12000	13900	22600	27200	7720	278
31	2185	3.0	46.5	13.0	**306 L2**	**—**	**BN132MA4**	**M4LA4**	15000	17000	36900	43000	11300	300
32	2098	1.7	44.6	9.0	**305 L2**	**—**	**BN132MA4**	**M4LA4**	11900	13700	22300	26800	7610	288
33	1984	1.6	43.6	7.5	**304 L3**	**—**	**BN132MA4**	**M4LA4**	11800	13600	22100	26600	7550	288
34	1937	1.1	42.6	14.0	**—**	**303 R3**	**BN132MA4**	**—**	11700	13500	22000	26400	7490	266
34	1937	1.6	42.6	14.0	**—**	**304 R3**	**BN132MA4**	**—**	11700	13500	22000	26400	7490	278
34	1937	2.0	42.6	14.0	**—**	**305 R3**	**BN132MA4**	**M4LA4**	11700	13500	22000	26400	7490	278
38	1805	1.2	38.4	9.0	**303 L2**	**—**	**BN132MA4**	**M4LA4**	11300	13000	21300	25600	7240	264
38	1805	1.6	38.4	9.0	**304 L2**	**—**	**BN132MA4**	**M4LA4**	11300	13000	21300	25600	7240	288
38	1805	2.4	38.4	9.0	**305 L2**	**—**	**BN132MA4**	**M4LA4**	11300	13000	21300	25600	7240	288
39	1695	0.9	37.3	10.0	**—**	**301 R3**	**BN132MA4**	**—**	3550	3550	10100	11600	2330	256
39	1690	1.4	37.1	14.0	**—**	**303 R3**	**BN132MA4**	**—**	11200	12900	21100	25400	7160	266
39	1690	2.0	37.1	14.0	**—**	**304 R3**	**BN132MA4**	**—**	11200	12900	21100	25400	7160	278
39	1690	2.6	37.1	14.0	**—**	**305 R3**	**BN132MA4**	**M4LA4**	11200	12900	21100	25400	7160	278
40	1681	1.1	35.8	9.0	**303 L2**	**—**	**BN132MA4**	**M4LA4**	11000	12700	20800	25100	7070	264
40	1681	2.1	35.8	9.0	**305 L2**	**—**	**BN132MA4**	**M4LA4**	11000	12700	20800	25100	7070	288
46	1432	1.5	31.5	14.0	**—**	**303 R3**	**BN132MA4**	**—**	10600	12200	20100	24100	6770	266
46	1432	2.2	31.5	14.0	**—**	**304 R3**	**BN132MA4**	**—**	10600	12200	20100	24100	6770	278
46	1432	2.6	31.5	14.0	**—**	**305 R3**	**BN132MA4**	**M4LA4**	10600	12200	20100	24100	6770	278
47	1446	1.5	30.8	9.0	**303 L2**	**—**	**BN132MA4**	**M4LA4**	10500	12100	19900	24000	6720	264
47	1446	2.0	30.8	9.0	**304 L2**	**—**	**BN132MA4**	**M4LA4**	10500	12100	19900	24000	6720	288
47	1446	3.0	30.8	9.0	**305 L2**	**—**	**BN132MA4**	**M4LA4**	10500	12100	19900	24000	6720	288
47	1443	1.1	30.7	7.5	**301 L2**	**—**	**BN132MA4**	**M4LA4**	3410	3410	9750	11200	2240	254
47	1384	1.1	30.4	12.0	**—**	**301 R3**	**BN132MA4**	**—**	3400	3400	9730	11200	2230	256
54	1242	1.5	26.4	9.0	**303 L2**	**—**	**BN132MA4**	**M4LA4**	9960	11500	19000	22900	6390	264
54	1242	2.8	26.4	9.0	**305 L2**	**—**	**BN132MA4**	**M4LA4**	9960	11500	19000	22900	6390	288
56	1169	1.7	25.7	14.0	**—**	**303 R3**	**BN132MA4**	**—**	9870	11400	18900	22700	6330	266
56	1169	2.6	25.7	14.0	**—**	**304 R3**	**BN132MA4**	**—**	9870	11400	18900	22700	6330	278
58	1130	1.2	24.8	12.0	**—**	**301 R3**	**BN132MA4**	**—**	3170	3170	9150	10500	2090	256
59	1156	1.3	24.6	7.5	**301 L2**	**—**	**BN132MA4**	**M4LA4**	3160	3160	9130	10500	2080	254
59	1152	1.9	24.5	9.0	**303 L2**	**—**	**BN132MA4**	**M4LA4**	9720	11200	18600	22400	6230	264
59	1152	2.8	24.5	9.0	**304 L2**	**—**	**BN132MA4**	**M4LA4**	9720	11200	18600	22400	6230	288
63	1069	2.0	22.7	9.0	**303 L2**	**—**	**BN132MA4**	**M4LA4**	9470	10900	18200	21900	6080	264
63	1069	2.6	22.7	9.0	**304 L2**	**—**	**BN132MA4**	**M4LA4**	9470	10900	18200	21900	6080	288
69	976	1.9	20.8	9.0	**303 L2**	**—**	**BN132MA4**	**M4LA4**	9190	10600	17700	21300	5900	264
72	944	1.3	20.1	7.5	**301 L2**	**—**	**BN132MA4**	**M4LA4**	2960	2960	8590	9870	1940	254
75	903	1.7	19.2	18.0	**—**	**303 R2**	**BN132MA4**	**M4LA4**	8960	10300	17300	20800	5750	266
79	854	1.6	18.2	7.5	**301 L2**	**—**	**BN132MA4**	**M4LA4**	2860	2860	8330	9580	1880	254
79	852	2.4	18.1	9.0	**303 L2**	**—**	**BN132MA4**	**M4LA4**	8780	10100	17000	20400	5630	264
91	747	2.4	15.9	18.0	**—**	**303 R2**	**BN132MA4**	**M4LA4**	8410	9710	16300	19700	5390	266
94	721	2.4	15.3	9.0	**303 L2**	**—**	**BN132MA4**	**M4LA4**	8310	9590	16200	19500	5330	264
97	697	1.0	14.8	7.5	**300 L2**	**—**	**BN132MA4**	**M4LA4**	2610	2610	7680	8820	1720	244
97	697	1.8	14.8	7.5	**301 L2**	**—**	**BN132MA4**	**M4LA4**	2670	2670	7840	9010	1760	254
98	694	1.4	14.8	12.0	**—**	**301 R2**	**BN132MA4**	**M4LA4**	2670	2670	7830	9000	1750	256
115	589	2.8	12.5	9.0	**303 L2**	**—**	**BN132MA4**	**M4LA4**	7770	8970	15200	18300	4980	264
119	569	1.2	12.1	7.5	**300 L2**	**—**	**BN132MA4**	**M4LA4**	2500	2500	7380	8480	1640	244
119	569	2.1	12.1	7.5	**301 L2**	**—**	**BN132MA4**	**M4LA4**	2500	2500	7380	8480	1640	254
122	556	1.1	11.8	12.0	**—**	**300 R2**	**BN132MA4**	**M4LA4**	2480	2480	7330	8420	1630	246
122	556	2.1	11.8	12.0	**—**	**301 R2**	**BN132MA4**	**M4LA4**	2480	2480	7330	8420	1630	256
149	469	1.6	9.67	11.0	**303 L1**	**—**	**BN132MA4**	**M4LA4**	7120	8220	14100	16900	4570	264

A

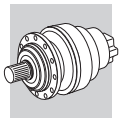

A

P_1 = 7.5 kW

n_2 min^{-1}	M_{n2} Nm	f_S	i	P_t kW					Rn_2 [N] MC	MZ	HC/PC	HZ/PZ	FZ	
160	437	1.4	9.00	7.5	**301 L1**	**—**	**BN132MA4**	**M4LA4**	2260	2260	6750	7750	1490	254
165	411	1.5	8.74	12.0	**—**	**300 R2**	**BN132MA4**	**M4LA4**	2240	2240	6690	7690	1470	246
165	411	2.7	8.74	12.0	**—**	**301 R2**	**BN132MA4**	**M4LA4**	2240	2240	6690	7690	1470	256
200	349	1.2	7.20	7.5	**300 L1**	**—**	**BN132MA4**	**M4LA4**	2100	2100	6310	7250	1380	244
200	349	2.1	7.20	7.5	**301 L1**	**—**	**BN132MA4**	**M4LA4**	2100	2100	6310	7250	1380	254
202	335	1.7	7.13	12.0	**—**	**300 R2**	**BN132MA4**	**M4LA4**	2090	2090	6300	7230	1380	246
250	280	1.7	5.77	7.5	**300 L1**	**—**	**BN132MA4**	**M4LA4**	1950	1950	5910	6790	1280	244
338	207	2.4	4.26	7.5	**300 L1**	**—**	**BN132MA4**	**M4LA4**	1760	1760	5390	6200	1160	244
414	169	2.8	3.48	7.5	**300 L1**	**—**	**BN132MA4**	**M4LA4**	1610	1610	4970	5710	1060	244

P_1 = 9.2 kW

n_2 min^{-1}	M_{n2} Nm	f_S	i	P_t kW					Rn_2 [N] MC	MZ	HC/PC	HZ/PZ	FZ	
0.76	101595	1.5	1893	18.0	**317 L4**	**—**	**BN132MB4**	**—**	—	—	442000	470000	150000	406
0.90	85603	2.0	1595	18.0	**317 L4**	**—**	**BN132MB4**	**—**	—	—	442000	470000	150000	406
0.96	80109	1.0	1492	18.0	**315 L4**	**—**	**BN132MB4**	**—**	—	—	206000	243000	90000	384
1.1	70765	2.4	1318	18.0	**317 L4**	**—**	**BN132MB4**	**—**	—	—	434300	462400	147000	406
1.1	68911	1.4	1284	18.0	**315 L4**	**—**	**BN132MB4**	**—**	—	—	201500	236600	87400	384
1.1	68570	1.1	1277	15.0	**314 L4**	**—**	**BN132MB4**	**—**	—	—	201200	236300	87300	372
1.2	66427	1.8	1237	18.0	**316 L4**	**—**	**BN132MB4**	**—**	—	—	331400	368600	144000	396
1.3	60873	2.8	1134	18.0	**317 L4**	**—**	**BN132MB4**	**—**	—	—	415100	442000	139800	406
1.3	59278	1.6	1104	18.0	**315 L4**	**—**	**BN132MB4**	**—**	—	—	192600	226200	83200	384
1.3	58985	1.3	1099	15.0	**314 L4**	**—**	**BN132MB4**	**—**	—	—	192400	225800	83000	372
1.4	55971	1.8	1043	18.0	**315 L4**	**—**	**BN132MB4**	**—**	—	—	189400	222300	81600	384
1.4	55971	2.4	1043	18.0	**316 L4**	**—**	**BN132MB4**	**—**	—	—	314800	350100	136000	396
1.4	55695	1.5	1038	15.0	**314 L4**	**—**	**BN132MB4**	**—**	—	—	189100	222000	81400	372
1.4	54435	1.0	1014	11.0	**313 L4**	**—**	**BN132MB4**	**—**	—	—	175900	208200	71800	360
1.5	51174	2.8	953	50.0	**—**	**317 R4**	**BN132MB4**	**—**	—	—	394100	419600	132000	406
1.5	49916	1.9	930	18.0	**315 L4**	**—**	**BN132MB4**	**—**	—	—	183000	214800	78500	384
1.6	49701	1.5	926	15.0	**314 L4**	**—**	**BN132MB4**	**—**	—	—	182700	214500	78400	372
1.6	48812	1.6	909	40.0	**—**	**315 R4**	**BN132MB4**	**—**	—	—	181700	213400	77900	386
1.6	48512	1.0	904	11.0	**311 L4**	**—**	**BN132MB4**	**—**	—	—	137500	171300	56200	348
1.6	47739	1.1	889	11.0	**313 L4**	**—**	**BN132MB4**	**—**	—	—	169100	200100	68800	360
1.7	46269	2.2	862	18.0	**315 L4**	**—**	**BN132MB4**	**—**	—	—	178800	210000	76600	384
1.7	46269	2.8	862	18.0	**316 L4**	**—**	**BN132MB4**	**—**	—	—	297400	330700	127600	396
1.7	46041	1.8	858	15.0	**314 L4**	**—**	**BN132MB4**	**—**	—	—	178600	209700	76400	372
1.7	44271	1.0	825	11.0	**311 L4**	**—**	**BN132MB4**	**—**	—	—	133800	166600	54500	348
1.8	43614	3.0	812	18.0	**316 L4**	**—**	**BN132MB4**	**—**	—	—	292100	324900	125100	396
1.8	42401	1.2	790	11.0	**313 L4**	**—**	**BN132MB4**	**—**	—	—	163200	193100	66100	360
1.8	41989	2.2	782	40.0	**—**	**315 R4**	**BN132MB4**	**—**	—	—	173700	203900	74100	386
1.9	41782	1.1	778	22.0	**—**	**313 R4**	**BN132MB4**	**—**	—	—	162500	192300	65800	362
1.9	39777	2.5	741	18.0	**315 L4**	**—**	**BN132MB4**	**—**	—	—	170900	200700	72800	384
2.0	39605	2.0	738	15.0	**314 L4**	**—**	**BN132MB4**	**—**	—	—	170700	200400	72700	372
2.0	38872	1.2	724	11.0	**311 L4**	**—**	**BN132MB4**	**—**	—	—	128700	160300	52200	348
2.1	37314	1.4	695	11.0	**313 L4**	**—**	**BN132MB4**	**—**	—	—	157000	185900	63300	360
2.1	36054	2.8	672	18.0	**315 L4**	**—**	**BN132MB4**	**—**	—	—	165900	194800	70500	384
2.2	35876	2.2	668	15.0	**314 L4**	**—**	**BN132MB4**	**—**	—	—	165700	194500	70300	372
2.2	35379	2.5	659	40.0	**—**	**315 R4**	**BN132MB4**	**—**	—	—	165000	193700	70000	386
2.2	34711	1.5	647	22.0	**—**	**313 R4**	**BN132MB4**	**—**	—	—	153700	181900	61800	362
2.3	33975	1.5	633	11.0	**313 L4**	**—**	**BN132MB4**	**—**	—	—	152700	180700	61400	360
2.3	33747	1.2	629	22.0	**—**	**311 R4**	**BN132MB4**	**—**	—	—	123300	153600	49800	374
2.3	33640	1.2	627	11.0	**311 L4**	**—**	**BN132MB4**	**—**	—	—	123200	153500	49700	348
2.3	33460	3.0	623	40.0	**—**	**315 R4**	**BN132MB4**	**—**	—	—	162300	190500	68700	386
2.3	32946	1.7	614	22.0	**—**	**314 R4**	**BN132MB4**	**—**	—	—	161500	189600	68400	374
2.4	31560	2.5	588	15.0	**314 L4**	**—**	**BN132MB4**	**—**	—	—	159500	187200	67400	372
2.5	30473	1.4	568	11.0	**311 L4**	**—**	**BN132MB4**	**—**	—	—	119600	149000	48100	348
2.6	30263	1.8	564	11.0	**313 L4**	**—**	**BN132MB4**	**—**	—	—	147500	174500	59100	360
2.6	29841	1.1	556	11.0	**310 L4**	**—**	**BN132MB4**	**—**	—	—	100600	126500	47800	336
2.6	29749	2.7	554	15.0	**314 L4**	**—**	**BN132MB4**	**—**	—	—	156600	183900	66100	372
2.7	28695	1.7	535	22.0	**—**	**313 R4**	**BN132MB4**	**—**	—	—	145100	171800	58000	362
2.7	28341	2.4	528	22.0	**—**	**314 R4**	**BN132MB4**	**—**	—	—	154400	181300	65000	374

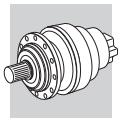

P_1 = 9.2 kW

n_2 min^{-1}	M_{n2} Nm	f_S	i	P_t kW					Rn_2 [N] MC	MZ	HC/PC	HZ/PZ	FZ	
2.8	27898	1.4	520	22.0	—	**311 R4**	**BN132MB4**	—	—	—	116500	145100	46700	374
2.8	27760	0.9	517	15.0	—	**310 R4**	**BN132MB4**	—	—	—	98400	123800	46600	338
2.8	27573	1.8	514	11.0	**313 L4**	—	**BN132MB4**	—	—	—	143400	169700	57300	360
2.8	27490	1.6	512	11.0	**311 L4**	—	**BN132MB4**	—	—	—	116000	144500	46500	348
2.8	27233	0.9	507	11.0	**310 L4**	—	**BN132MB4**	—	—	—	97900	123000	46300	336
2.9	26630	2.0	496	22.0	—	**313 R4**	**BN132MB4**	—	—	—	141900	168000	56600	362
2.9	26547	3.0	495	15.0	**314 L4**	—	**BN132MB4**	—	—	—	151400	177700	63600	372
2.9	26297	1.3	490	22.0	—	**311 R4**	**BN132MB4**	—	—	—	114400	142500	45800	374
3.2	24249	2.2	452	11.0	**313 L4**	—	**BN132MB4**	—	—	—	138000	163300	54900	360
3.2	24191	1.2	451	11.0	**310 L4**	—	**BN132MB4**	—	—	—	94400	118700	44500	336
3.2	24178	2.0	450	22.0	—	**313 R4**	**BN132MB4**	—	—	—	137900	163200	54800	362
3.2	23880	2.8	445	22.0	—	**314 R4**	**BN132MB4**	—	—	—	146700	172200	61400	374
3.3	23506	1.6	438	22.0	—	**311 R4**	**BN132MB4**	—	—	—	110600	137800	44100	374
3.4	22509	1.3	419	15.0	—	**310 R4**	**BN132MB4**	—	—	—	92400	116200	43500	338
3.5	22157	1.8	413	22.0	—	**311 R4**	**BN132MB4**	—	—	—	108700	135400	43300	374
3.5	22027	1.9	410	11.0	**311 L4**	—	**BN132MB4**	—	—	—	108500	135200	43200	348
3.7	21154	2.6	394	11.0	**313 L4**	—	**BN132MB4**	—	—	—	132500	156800	52400	360
3.7	21024	0.9	392	11.0	**310 L4**	—	**BN132MB4**	—	—	—	90500	113900	42500	336
3.7	20798	2.2	387	22.0	—	**313 R4**	**BN132MB4**	—	—	—	131800	156000	52100	362
4.0	19498	1.2	363	15.0	—	**310 R4**	**BN132MB4**	—	—	—	88500	111300	41500	338
4.1	18895	2.8	352	11.0	**313 L4**	—	**BN132MB4**	—	—	—	128000	151500	50500	360
4.1	19455	1.0	350	18.0	**310 L3**	—	**BN132MB4**	—	—	—	87600	110100	41000	336
4.1	18738	1.1	349	7.5	**309 L4**	—	**BN132MB4**	—	—	—	73800	95200	22700	324
4.1	18658	2.1	348	11.0	**311 L4**	—	**BN132MB4**	—	—	—	103200	128600	40900	348
4.2	18549	2.9	346	22.0	—	**313 R4**	**BN132MB4**	—	—	—	127300	150700	50200	362
4.2	18317	2.1	341	22.0	—	**311 R4**	**BN132MB4**	—	—	—	102700	127900	40600	374
4.3	17937	1.5	334	15.0	—	**310 R4**	**BN132MB4**	—	—	—	86300	108600	40300	338
4.3	17776	1.0	331	15.0	—	**309 R4**	**BN132MB4**	—	—	—	72700	93700	22300	326
4.5	17265	2.3	322	22.0	—	**311 R4**	**BN132MB4**	—	—	—	100900	125600	39800	374
4.7	16574	2.7	309	22.0	—	**313 R4**	**BN132MB4**	—	—	—	123100	145700	48300	362
4.7	16369	1.4	305	15.0	—	**310 R4**	**BN132MB4**	—	—	—	84000	105600	39100	338
4.7	16861	2.3	304	18.0	**313 L3**	—	**BN132MB4**	—	—	—	122500	145000	48100	360
4.9	16393	1.4	295	18.0	**310 L3**	—	**BN132MB4**	—	—	—	83200	104600	38700	336
4.9	15756	2.4	294	22.0	—	**311 R4**	**BN132MB4**	—	—	—	98100	122200	38600	374
4.9	16163	1.7	291	18.0	**311 L3**	—	**BN132MB4**	—	—	—	97900	121900	38500	348
5.1	15270	1.1	284	15.0	—	**309 R4**	**BN132MB4**	—	—	—	69400	89500	21200	326
5.1	15737	1.0	284	11.0	**309 L3**	—	**BN132MB4**	—	—	—	69400	89400	21100	324
5.1	15194	1.7	283	15.0	—	**310 R4**	**BN132MB4**	—	—	—	82100	103300	38100	338
5.4	14273	2.6	266	22.0	—	**311 R4**	**BN132MB4**	—	—	—	95300	118700	37400	374
5.6	13866	1.6	258	15.0	—	**310 R4**	**BN132MB4**	—	—	—	79900	100500	37000	338
5.6	13852	1.1	258	15.0	—	**307 R4**	**BN132MB4**	**M4LB4**	29500	37000	66400	87000	25600	314
5.6	13852	1.3	258	15.0	—	**309 R4**	**BN132MB4**	—	—	—	67400	87000	20500	326
5.8	13835	1.3	249	18.0	**310 L3**	—	**BN132MB4**	—	—	—	79100	99400	36600	336
5.9	13619	2.5	245	18.0	**311 L3**	—	**BN132MB4**	—	—	—	93000	115800	36400	348
6.0	13281	1.0	239	11.0	**309 L3**	—	**BN132MB4**	—	—	—	65900	85000	20000	324
6.2	12560	2.0	234	15.0	—	**310 R4**	**BN132MB4**	—	—	—	77600	97600	35800	338
6.2	12465	1.3	232	15.0	—	**309 R4**	**BN132MB4**	—	—	—	65300	84200	19800	326
6.3	12774	1.7	230	18.0	**310 L3**	—	**BN132MB4**	—	—	—	77200	97100	35600	336
6.3	12278	2.9	229	22.0	—	**311 R4**	**BN132MB4**	—	—	—	91100	113400	35500	374
6.5	12372	1.1	223	11.0	**309 L3**	—	**BN132MB4**	—	—	—	64500	83200	19500	324
6.5	12263	1.0	221	11.0	**307 L3**	—	**BN132MB4**	**M4LB4**	28000	35100	63300	83000	24300	312
7.0	11049	2.0	206	15.0	—	**310 R4**	**BN132MB4**	—	—	—	74700	93900	34300	338
7.0	11038	1.3	206	15.0	—	**307 R4**	**BN132MB4**	**M4LB4**	27300	34300	62000	81200	23700	314
7.0	11038	1.8	206	15.0	—	**309 R4**	**BN132MB4**	—	—	—	63000	81200	19000	326
7.1	11258	3.0	203	18.0	**311 L3**	—	**BN132MB4**	—	—	—	87800	109400	34100	348
7.1	11202	2.0	202	18.0	**310 L3**	—	**BN132MB4**	—	—	—	74200	93300	34100	336
7.1	11191	1.0	202	11.0	**307 L3**	—	**BN132MB4**	**M4LB4**	27100	34000	61600	80700	23600	312
7.1	11191	1.5	202	11.0	**309 L3**	—	**BN132MB4**	—	—	—	62600	80700	18900	324
7.6	10236	1.4	191	15.0	—	**307 R4**	**BN132MB4**	**M4LB4**	26600	33400	60600	79400	23200	314
7.6	10236	1.7	191	15.0	—	**309 R4**	**BN132MB4**	—	—	—	61600	79400	18500	326
7.6	10164	2.3	189	15.0	—	**310 R4**	**BN132MB4**	—	—	—	72800	91500	33400	338
7.9	10137	1.4	183	11.0	**309 L3**	—	**BN132MB4**	—	—	—	60800	78400	18300	324
8.0	9713	1.0	181	12.0	—	**306 R4**	**BN132MB4**	**M4LB4**	23000	26100	54300	63200	17300	302
8.1	9838	1.9	177	18.0	**310 L3**	—	**BN132MB4**	—	—	—	71400	89800	32600	336
8.1	9826	1.3	177	11.0	**307 L3**	—	**BN132MB4**	**M4LB4**	26000	32600	59300	77700	22600	312

A

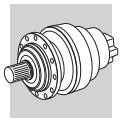

P_1 = 9.2 kW

n_2 min^{-1}	M_{n2} Nm	f_S	i	P_t kW					Rn_2 [N] MC	MZ	HC/PC	HZ/PZ	FZ	
8.7	8867	1.8	165	15.0	—	**309 R4**	**BN132MB4**	—	—	—	59000	76100	17700	326
8.8	9083	2.4	164	18.0	**310 L3**	—	**BN132MB4**	—	—	—	69700	87600	31800	336
8.9	8967	1.2	162	11.0	**307 L3**	—	**BN132MB4**	**M4LB4**	25200	31600	57700	75600	21900	312
8.9	8967	1.8	162	11.0	**309 L3**	—	**BN132MB4**	—	—	—	58600	75600	17500	324
9.0	8610	2.6	160	15.0	—	**310 R4**	**BN132MB4**	—	—	—	69300	87100	31600	338
9.1	8474	1.1	158	12.0	—	**306 R4**	**BN132MB4**	**M4LB4**	22500	25500	53200	62000	16900	302
9.5	8157	2.3	152	15.0	—	**309 R4**	**BN132MB4**	—	—	—	57500	74200	17200	326
9.8	8123	1.6	146	11.0	**307 L3**	—	**BN132MB4**	**M4LB4**	24400	30600	56000	73300	21200	312
10.2	7869	2.6	142	18.0	**310 L3**	—	**BN132MB4**	—	—	—	66700	83900	30300	336
10.2	7825	1.0	141	7.5	**306 L3**	—	**BN132MB4**	**M4LB4**	21700	24600	51500	59900	16300	300
10.4	7703	1.4	139	11.0	**307 L3**	—	**BN132MB4**	**M4LB4**	24000	30100	55100	72200	20800	312
10.4	7703	2.1	139	11.0	**309 L3**	—	**BN132MB4**	—	—	—	56000	72200	16700	324
10.6	7293	2.9	136	15.0	—	**310 R4**	**BN132MB4**	—	—	—	65900	82900	29900	338
11.0	7238	2.9	130	18.0	**310 L3**	—	**BN132MB4**	—	—	—	65100	81900	29500	336
11.4	6987	1.9	126	11.0	**307 L3**	—	**BN132MB4**	**M4LB4**	23200	29100	53500	70100	20200	312
11.4	6987	2.3	126	11.0	**309 L3**	—	**BN132MB4**	—	—	—	54400	70100	16100	324
11.6	6658	1.6	124	15.0	—	**307 R4**	**BN132MB4**	**M4LB4**	24800	31100	56900	74500	21600	314
11.9	6731	1.2	121	7.5	**306 L3**	—	**BN132MB4**	**M4LB4**	20600	23400	49200	57300	15500	300
12.0	6647	1.3	120	22.0	—	**307 R3**	**BN132MB4**	**M4LB4**	22800	28600	52700	69100	19800	314
12.0	6647	1.9	120	22.0	—	**309 R3**	**BN132MB4**	—	—	—	53600	69100	15900	326
12.0	6647	2.6	120	22.0	—	**310 R3**	**BN132MB4**	—	—	—	63500	79800	28600	338
12.1	6615	1.0	119	14.0	—	**306 R3**	**BN132MB4**	**M4LB4**	20500	23200	48900	57000	15400	302
12.1	6606	3.0	119	18.0	**310 L3**	—	**BN132MB4**	—	—	—	63300	79600	28600	336
12.7	6288	1.7	113	11.0	**307 L3**	—	**BN132MB4**	**M4LB4**	22400	28100	51800	67900	19500	312
12.7	6288	2.5	113	11.0	**309 L3**	—	**BN132MB4**	—	—	—	52700	67900	15600	324
12.8	6236	1.2	112	7.5	**306 L3**	—	**BN132MB4**	**M4LB4**	20100	22800	48100	56000	15100	300
13.7	5640	2.4	105	15.0	—	**307 R4**	**BN132MB4**	**M4LB4**	24100	30300	55400	72700	21000	314
13.8	5785	1.5	104	7.5	**306 L3**	—	**BN132MB4**	**M4LB4**	19600	22200	47000	54700	14700	300
14.4	5568	2.2	100	11.0	**307 L3**	—	**BN132MB4**	**M4LB4**	21500	27000	50000	65500	18700	312
14.4	5568	3.0	100	11.0	**309 L3**	—	**BN132MB4**	—	—	—	50800	65500	15000	324
14.5	5495	1.6	99.0	22.0	—	**307 R3**	**BN132MB4**	**M4LB4**	21400	26900	49800	65200	18600	314
14.5	5495	2.3	99.0	22.0	—	**309 R3**	**BN132MB4**	—	—	—	50600	65200	14900	326
14.5	5495	3.0	99.0	22.0	—	**310 R3**	**BN132MB4**	—	—	—	59900	75400	26900	338
14.6	5468	1.2	98.5	14.0	—	**306 R3**	**BN132MB4**	**M4LB4**	19200	21800	46200	53800	14400	302
15.5	5163	2.4	93.0	11.0	**307 L3**	—	**BN132MB4**	**M4LB4**	21000	26300	48900	64000	18200	312
15.5	5163	2.9	93.0	11.0	**309 L3**	—	**BN132MB4**	—	—	—	49600	64000	14600	324
16.3	4900	1.7	88.3	7.5	**306 L3**	—	**BN132MB4**	**M4LB4**	18500	21000	44700	52100	13900	300
17.0	4704	1.6	84.7	14.0	—	**306 R3**	**BN132MB4**	**M4LB4**	18300	20700	44200	51400	13700	302
17.3	4630	2.2	83.4	22.0	—	**307 R3**	**BN132MB4**	**M4LB4**	20200	25400	47300	62000	17600	314
17.6	4544	1.5	81.9	7.5	**306 L3**	—	**BN132MB4**	**M4LB4**	18100	20500	43700	50900	13600	300
17.9	4473	2.3	80.6	11.0	**307 L3**	—	**BN132MB4**	**M4LB4**	20000	25100	46800	61300	17400	312
18.3	4370	1.0	78.7	14.0	—	**305 R3**	**BN132MB4**	**M4LB4**	14300	16500	26400	31800	9190	278
18.3	4364	2.5	78.6	22.0	—	**307 R3**	**BN132MB4**	**M4LB4**	19800	24900	46500	60900	17200	314
18.6	4288	1.1	77.2	7.5	**305 L3**	—	**BN132MB4**	**M4LB4**	14200	16400	26300	31600	9140	288
18.7	4274	2.0	77.0	7.5	**306 L3**	—	**BN132MB4**	**M4LB4**	17700	20100	42900	50000	13300	300
19.4	4114	2.8	74.1	11.0	**307 L3**	—	**BN132MB4**	**M4LB4**	19400	24400	45600	59800	16900	312
19.8	4046	1.8	72.9	14.0	—	**306 R3**	**BN132MB4**	**M4LB4**	17400	19700	42200	49200	13100	302
19.9	4157	1.3	72.5	13.0	**306 L2**	—	**BN132MB4**	**M4LB4**	17400	19700	42100	49100	13000	300
19.9	4012	1.0	72.3	7.5	**305 L3**	—	**BN132MB4**	**M4LB4**	13900	16100	25700	31000	8940	288
20.1	3983	2.5	71.8	22.0	—	**307 R3**	**BN132MB4**	**M4LB4**	19200	24100	45200	59200	16700	314
21.3	3748	1.9	67.5	14.0	—	**306 R3**	**BN132MB4**	**M4LB4**	17000	19200	41300	48000	12700	302
22.1	3621	2.1	65.2	7.5	**306 L3**	—	**BN132MB4**	**M4LB4**	16800	19000	40800	47500	12600	300
22.8	3501	1.2	63.1	14.0	—	**305 R3**	**BN132MB4**	**M4LB4**	13300	15400	24700	29700	8540	278
22.8	3500	1.0	63.1	7.5	**304 L3**	—	**BN132MB4**	**M4LB4**	13300	15400	24700	29700	8540	288
22.8	3500	1.3	63.1	7.5	**305 L3**	—	**BN132MB4**	**M4LB4**	13300	15400	24700	29700	8540	288
24.8	3224	2.4	58.1	14.0	—	**306 R3**	**BN132MB4**	**M4LB4**	16100	18300	39400	45900	12100	302
25.6	3225	1.6	56.3	13.0	**306 L2**	—	**BN132MB4**	**M4LB4**	16000	18100	39100	45500	12000	300
25.8	3200	1.1	55.8	9.0	**305 L2**	—	**BN132MB4**	**M4LB4**	12800	14800	23800	28700	8200	288
26.6	3008	1.2	54.2	14.0	—	**305 R3**	**BN132MB4**	**M4LB4**	12700	14600	23600	28400	8120	278
27.0	2965	1.1	53.4	7.5	**304 L3**	—	**BN132MB4**	**M4LB4**	12600	14500	23500	28300	8080	288
27.0	2965	1.3	53.4	7.5	**305 L3**	—	**BN132MB4**	**M4LB4**	12600	14500	23500	28300	8080	288
27.0	2956	2.4	53.2	7.5	**306 L3**	—	**BN132MB4**	**M4LB4**	15700	17800	38400	44700	11800	300
28.6	2790	1.2	50.3	14.0	—	**304 R3**	**BN132MB4**	—	12300	14200	23100	27800	7920	278
28.6	2790	1.6	50.3	14.0	—	**305 R3**	**BN132MB4**	**M4LB4**	12300	14200	23100	27800	7920	278
31	2587	1.1	46.6	14.0	—	**304 R3**	**BN132MB4**	—	12000	13900	22600	27200	7720	278

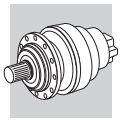

P_1 = 9.2 kW

n_2 min^{-1}	M_{n2} Nm	f_S	i	P_t kW					Rn_2 [N] MC	MZ	HC/PC	HZ/PZ	FZ	
31	2587	1.7	46.6	14.0	—	**305 R3**	**BN132MB4**	**M4LB4**	12000	13900	22600	27200	7720	278
31	2666	2.4	46.5	13.0	**306 L2**	—	**BN132MB4**	**M4LB4**	15000	17000	36900	43000	11300	300
31	2569	2.9	46.3	14.0	—	**306 R3**	**BN132MB4**	**M4LB4**	15000	16900	36800	42900	11200	302
32	2560	1.4	44.6	9.0	**305 L2**	—	**BN132MB4**	**M4LB4**	11900	13700	22300	26800	7610	288
33	2420	1.3	43.6	7.5	**304 L3**	—	**BN132MB4**	**M4LB4**	11800	13600	22100	26600	7550	288
34	2363	1.3	42.6	14.0	—	**304 R3**	**BN132MB4**	—	11700	13500	22000	26400	7490	278
34	2363	1.6	42.6	14.0	—	**305 R3**	**BN132MB4**	**M4LB4**	11700	13500	22000	26400	7490	278
37	2204	2.9	38.4	13.0	**306 L2**	—	**BN132MB4**	**M4LB4**	14100	15900	34800	40600	10600	300
38	2202	1.0	38.4	9.0	**303 L2**	—	**BN132MB4**	**M4LB4**	11300	13000	21300	25600	7240	264
38	2202	1.3	38.4	9.0	**304 L2**	—	**BN132MB4**	**M4LB4**	11300	13000	21300	25600	7240	288
38	2202	2.0	38.4	9.0	**305 L2**	—	**BN132MB4**	**M4LB4**	11300	13000	21300	25600	7240	288
39	2062	1.2	37.1	14.0	—	**303 R3**	**BN132MB4**	—	11200	12900	21100	25400	7160	266
39	2062	1.7	37.1	14.0	—	**304 R3**	**BN132MB4**	—	11200	12900	21100	25400	7160	278
39	2062	2.1	37.1	14.0	—	**305 R3**	**BN132MB4**	**M4LB4**	11200	12900	21100	25400	7160	278
40	2051	1.7	35.8	9.0	**305 L2**	—	**BN132MB4**	**M4LB4**	11000	12700	20800	25100	7070	288
46	1746	1.2	31.5	14.0	—	**303 R3**	**BN132MB4**	—	10600	12200	20100	24100	6770	266
46	1746	1.8	31.5	14.0	—	**304 R3**	**BN132MB4**	—	10600	12200	20100	24100	6770	278
46	1746	2.2	31.5	14.0	—	**305 R3**	**BN132MB4**	**M4LB4**	10600	12200	20100	24100	6770	278
47	1764	1.2	30.8	9.0	**303 L2**	—	**BN132MB4**	**M4LB4**	10500	12100	19900	24000	6720	264
47	1764	1.6	30.8	9.0	**304 L2**	—	**BN132MB4**	**M4LB4**	10500	12100	19900	24000	6720	288
47	1764	2.4	30.8	9.0	**305 L2**	—	**BN132MB4**	**M4LB4**	10500	12100	19900	24000	6720	288
47	1688	0.9	30.4	10.0	—	**301 R3**	**BN132MB4**	—	3320	3320	9530	10900	2180	256
54	1516	1.2	26.4	9.0	**303 L2**	—	**BN132MB4**	**M4LB4**	9960	11500	19000	22900	6390	264
54	1516	2.3	26.4	9.0	**305 L2**	—	**BN132MB4**	**M4LB4**	9960	11500	19000	22900	6390	288
56	1426	1.4	25.7	14.0	—	**303 R3**	**BN132MB4**	—	9870	11400	18900	22700	6330	266
56	1426	2.1	25.7	14.0	—	**304 R3**	**BN132MB4**	—	9870	11400	18900	22700	6330	278
56	1426	2.5	25.7	14.0	—	**305 R3**	**BN132MB4**	**M4LB4**	9870	11400	18900	22700	6330	278
58	1378	1.0	24.8	12.0	—	**301 R3**	**BN132MB4**	—	3170	3170	9150	10500	2090	256
59	1410	1.1	24.6	7.5	**301 L2**	—	**BN132MB4**	**M4LB4**	3160	3160	9130	10500	2080	254
59	1406	1.5	24.5	9.0	**303 L2**	—	**BN132MB4**	**M4LB4**	9720	11200	18600	22400	6230	264
59	1406	2.3	24.5	9.0	**304 L2**	—	**BN132MB4**	**M4LB4**	9720	11200	18600	22400	6230	288
59	1406	2.7	24.5	9.0	**305 L2**	—	**BN132MB4**	**M4LB4**	9720	11200	18600	22400	6230	288
63	1304	1.6	22.7	9.0	**303 L2**	—	**BN132MB4**	**M4LB4**	9470	10900	18200	21900	6080	264
63	1304	2.1	22.7	9.0	**304 L2**	—	**BN132MB4**	**M4LB4**	9470	10900	18200	21900	6080	288
69	1191	1.5	20.8	9.0	**303 L2**	—	**BN132MB4**	**M4LB4**	9470	10900	18200	21900	6080	264
69	1191	2.5	20.8	9.0	**304 L2**	—	**BN132MB4**	**M4LB4**	9190	10600	17700	21300	5900	288
69	1191	2.7	20.8	9.0	**305 L2**	—	**BN132MB4**	**M4LB4**	9190	10600	17700	21300	5900	288
72	1151	1.1	20.1	7.5	**301 L2**	—	**BN132MB4**	**M4LB4**	2960	2960	8590	9870	1940	254
75	1102	1.4	19.2	18.0	—	**303 R2**	**BN132MB4**	**M4LB4**	8960	10300	17300	20800	5750	266
75	1102	2.6	19.2	18.0	—	**305 R2**	**BN132MB4**	**M4LB4**	8960	10300	17300	20800	5750	278
79	1042	1.3	18.2	7.5	**301 L2**	—	**BN132MB4**	**M4LB4**	2860	2860	8330	9580	1880	254
79	1039	1.9	18.1	9.0	**303 L2**	—	**BN132MB4**	**M4LB4**	8780	10100	17000	20400	5630	264
79	1039	2.8	18.1	9.0	**304 L2**	—	**BN132MB4**	**M4LB4**	8780	10100	17000	20400	5630	288
86	966	2.5	16.8	18.0	—	**304 R2**	**BN132MB4**	**M4LB4**	8570	9900	16600	20000	5500	278
91	911	2.0	15.9	18.0	—	**303 R2**	**BN132MB4**	**M4LB4**	8410	9710	16300	19700	5390	266
94	880	1.9	15.3	9.0	**303 L2**	—	**BN132MB4**	**M4LB4**	8310	9590	16200	19500	5330	264
97	851	1.5	14.8	7.5	**301 L2**	—	**BN132MB4**	**M4LB4**	2670	2670	7840	9010	1760	254
98	846	1.1	14.8	12.0	—	**301 R2**	**BN132MB4**	**M4LB4**	2670	2670	7830	9000	1750	256
105	784	2.5	13.7	18.0	—	**303 R2**	**BN132MB4**	**M4LB4**	8000	9230	15600	18800	5130	266
115	718	2.3	12.5	9.0	**303 L2**	—	**BN132MB4**	**M4LB4**	7770	8970	15200	18300	4980	264
119	694	1.0	12.1	7.5	**300 L2**	—	**BN132MB4**	**M4LB4**	2440	2440	7230	8300	1600	244
119	694	1.8	12.1	7.5	**301 L2**	—	**BN132MB4**	**M4LB4**	2500	2500	7380	8480	1640	254
122	678	1.7	11.8	12.0	—	**301 R2**	**BN132MB4**	**M4LB4**	2480	2480	7330	8420	1630	256
149	572	1.3	9.67	11.0	**303 L1**	—	**BN132MB4**	**M4LB4**	7120	8220	14100	16900	4570	264
160	533	1.2	9.00	7.5	**301 L1**	—	**BN132MB4**	**M4LB4**	2260	2260	6750	7750	1490	254
165	501	1.2	8.74	12.0	—	**300 R2**	**BN132MB4**	**M4LB4**	2240	2240	6690	7690	1470	246
165	501	2.2	8.74	12.0	—	**301 R2**	**BN132MB4**	**M4LB4**	2240	2240	6690	7690	1470	256
192	444	2.7	7.50	11.0	**303 L1**	—	**BN132MB4**	**M4LB4**	6550	7560	13000	15700	4200	264
200	426	1.0	7.20	7.5	**300 L1**	—	**BN132MB4**	**M4LB4**	2100	2100	6310	7250	1380	244
200	426	1.8	7.20	7.5	**301 L1**	—	**BN132MB4**	**M4LB4**	2100	2100	6310	7250	1380	254
202	409	1.4	7.13	12.0	—	**300 R2**	**BN132MB4**	**M4LB4**	2090	2090	6300	7230	1380	246
202	409	2.5	7.13	12.0	—	**301 R2**	**BN132MB4**	**M4LB4**	2090	2090	6300	7230	1380	256
250	341	1.4	5.77	7.5	**300 L1**	—	**BN132MB4**	**M4LB4**	1950	1950	5910	6790	1280	244
250	341	2.7	5.77	7.5	**301 L1**	—	**BN132MB4**	**M4LB4**	1950	1950	5910	6790	1280	254
338	252	1.9	4.26	7.5	**300 L1**	—	**BN132MB4**	**M4LB4**	1760	1760	5390	6200	1160	244
414	206	2.3	3.48	7.5	**300 L1**	—	**BN132MB4**	**M4LB4**	1610	1610	4970	5710	1060	244

A

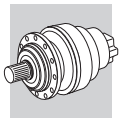

P_1 = 11 kW

n_2 min^{-1}	M_{n2} Nm	f_S	i	P_t kW					Rn_2 [N] MC	MZ	HC/PC	HZ/PZ	FZ	
0.76	121580	1.3	1893	18.0	**317 L4**	—	**BN160MR4**	—	—	—	442000	470000	150000	406
0.90	102443	1.7	1595	18.0	**317 L4**	—	**BN160MR4**	—	—	—	442000	470000	150000	406
1.1	84686	2.0	1318	18.0	**317 L4**	—	**BN160MR4**	—	—	—	434300	462400	147000	406
1.1	82467	1.2	1284	18.0	**315 L4**	—	**BN160MR4**	—	—	—	201500	236600	87400	384
1.1	82060	0.9	1277	15.0	**314 L4**	—	**BN160MR4**	—	—	—	201200	236300	87300	372
1.2	79495	1.5	1237	18.0	**316 L4**	—	**BN160MR4**	—	—	—	331400	368600	144000	396
1.3	72848	2.3	1134	18.0	**317 L4**	—	**BN160MR4**	—	—	—	415100	442000	139800	406
1.3	70939	1.3	1104	18.0	**315 L4**	—	**BN160MR4**	—	—	—	192600	226200	83200	384
1.3	70589	1.1	1099	15.0	**314 L4**	—	**BN160MR4**	—	—	—	192400	225800	83000	372
1.4	66982	1.5	1043	18.0	**315 L4**	—	**BN160MR4**	—	—	—	189400	222300	81600	384
1.4	66982	2.0	1043	18.0	**316 L4**	—	**BN160MR4**	—	—	—	314800	350100	136000	396
1.4	66651	1.2	1038	15.0	**314 L4**	—	**BN160MR4**	—	—	—	189100	222000	81400	372
1.4	66317	2.7	1032	18.0	**317 L4**	—	**BN160MR4**	—	—	—	403600	429700	135500	406
1.5	61240	2.4	953	50.0	—	**317 R4**	**BN160MR4**	—	—	—	394100	419600	132000	406
1.5	59735	1.6	930	18.0	**315 L4**	—	**BN160MR4**	—	—	—	183000	214800	78500	384
1.6	59478	1.2	926	15.0	**314 L4**	—	**BN160MR4**	—	—	—	182700	214500	78400	372
1.6	58414	1.3	909	40.0	—	**315 R4**	**BN160MR4**	—	—	—	181700	213400	77900	386
1.6	58051	2.9	904	18.0	**317 L4**	—	**BN160MR4**	—	—	—	387800	412900	129600	406
1.6	57130	0.9	889	11.0	**313 L4**	—	**BN160MR4**	—	—	—	169100	200100	68800	360
1.7	55372	1.8	862	18.0	**315 L4**	—	**BN160MR4**	—	—	—	178800	210000	76600	384
1.7	55372	2.3	862	18.0	**316 L4**	—	**BN160MR4**	—	—	—	297400	330700	127600	396
1.7	55098	1.5	858	15.0	**314 L4**	—	**BN160MR4**	—	—	—	178600	209700	76400	372
1.8	52194	2.5	812	18.0	**316 L4**	—	**BN160MR4**	—	—	—	292100	324900	125100	396
1.8	50742	1.0	790	11.0	**313 L4**	—	**BN160MR4**	—	—	—	163200	193100	66100	360
1.8	50249	1.8	782	40.0	—	**315 R4**	**BN160MR4**	—	—	—	173700	203900	74100	386
1.9	47602	2.1	741	18.0	**315 L4**	—	**BN160MR4**	—	—	—	170900	200700	72800	384
1.9	47602	2.7	741	18.0	**316 L4**	—	**BN160MR4**	—	—	—	284200	316100	121400	396
2.0	47396	1.7	738	15.0	**314 L4**	—	**BN160MR4**	—	—	—	170700	200400	72700	372
2.0	46656	2.8	726	18.0	**316 L4**	—	**BN160MR4**	—	—	—	282500	314100	120500	396
2.0	46518	1.0	724	11.0	**311 L4**	—	**BN160MR4**	—	—	—	128700	160300	52200	348
2.1	44655	1.1	695	11.0	**313 L4**	—	**BN160MR4**	—	—	—	157000	185900	63300	360
2.1	43978	2.9	685	18.0	**316 L4**	—	**BN160MR4**	—	—	—	277500	308600	118200	396
2.1	43147	2.3	672	18.0	**315 L4**	—	**BN160MR4**	—	—	—	165900	194800	70500	384
2.2	42934	1.9	668	15.0	**314 L4**	—	**BN160MR4**	—	—	—	165700	194500	70300	372
2.2	42339	2.1	659	40.0	—	**315 R4**	**BN160MR4**	—	—	—	165000	193700	70000	386
2.2	41540	1.2	647	22.0	—	**313 R4**	**BN160MR4**	—	—	—	153700	181900	61800	362
2.3	40659	1.3	633	11.0	**313 L4**	—	**BN160MR4**	—	—	—	152700	180700	61400	360
2.3	40386	1.0	629	22.0	—	**311 R4**	**BN160MR4**	—	—	—	123300	153600	49800	374
2.3	40258	1.0	627	11.0	**311 L4**	—	**BN160MR4**	—	—	—	123200	153500	49700	348
2.3	40042	2.5	623	40.0	—	**315 R4**	**BN160MR4**	—	—	—	162300	190500	68700	386
2.3	40042	2.9	623	45.0	—	**316 R4**	**BN160MR4**	—	—	—	269800	300100	114500	386
2.3	39427	1.5	614	22.0	—	**314 R4**	**BN160MR4**	—	—	—	161500	189600	68400	374
2.4	37956	2.6	591	18.0	**315 L4**	—	**BN160MR4**	—	—	—	159700	187500	67500	384
2.4	37769	2.1	588	15.0	**314 L4**	—	**BN160MR4**	—	—	—	159500	187200	67400	372
2.5	36468	1.2	568	11.0	**311 L4**	—	**BN160MR4**	—	—	—	119600	149000	48100	348
2.6	36216	1.5	564	11.0	**313 L4**	—	**BN160MR4**	—	—	—	147500	174500	59100	360
2.6	35601	2.2	554	15.0	**314 L4**	—	**BN160MR4**	—	—	—	156600	183900	66100	372
2.7	34340	1.4	535	22.0	—	**313 R4**	**BN160MR4**	—	—	—	145100	171800	58000	362
2.7	34269	2.9	533	18.0	**315 L4**	—	**BN160MR4**	—	—	—	154900	181800	65200	384
2.7	33916	2.0	528	22.0	—	**314 R4**	**BN160MR4**	—	—	—	154400	181300	65000	374
2.7	33739	2.9	525	40.0	—	**315 R4**	**BN160MR4**	—	—	—	154100	181000	64900	386
2.8	33386	1.2	520	22.0	—	**311 R4**	**BN160MR4**	—	—	—	116500	145100	46700	374
2.8	32997	1.5	514	11.0	**313 L4**	—	**BN160MR4**	—	—	—	143400	169700	57300	360
2.8	32898	1.3	512	11.0	**311 L4**	—	**BN160MR4**	—	—	—	116000	144500	46500	348
2.9	31869	1.6	496	22.0	—	**313 R4**	**BN160MR4**	—	—	—	141900	168000	56600	362
2.9	31770	2.5	495	15.0	**314 L4**	—	**BN160MR4**	—	—	—	151400	177700	63600	372
2.9	31470	1.1	490	22.0	—	**311 R4**	**BN160MR4**	—	—	—	114400	142500	45800	374
3.1	29430	2.7	458	15.0	**314 L4**	—	**BN160MR4**	—	—	—	148000	173700	62000	372
3.2	29019	1.9	452	11.0	**313 L4**	—	**BN160MR4**	—	—	—	138000	163300	54900	360
3.2	28950	1.0	451	11.0	**310 L4**	—	**BN160MR4**	—			92500	116300	43500	336
3.2	28934	1.6	450	22.0	—	**313 R4**	**BN160MR4**	—	—	—	137900	163200	54800	362
3.2	28577	2.4	445	22.0	—	**314 R4**	**BN160MR4**	—	—	—	146700	172200	61400	374
3.3	28131	1.3	438	22.0	—	**311 R4**	**BN160MR4**	—	—	—	110600	137800	44100	374
3.4	27027	2.9	421	22.0	—	**314 R4**	**BN160MR4**	—	—	—	144200	169300	60300	374
3.4	26937	1.1	419	15.0	—	**310 R4**	**BN160MR4**	—	—	—	92400	116200	43500	338

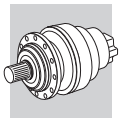

P_1 = 11 kW

n_2 min^{-1}	M_{n2} Nm	f_S	i	P_t kW					Rn_2 [N] MC	MZ	HC/PC	HZ/PZ	FZ	
3.5	26516	1.5	413	22.0	—	**311 R4**	**BN160MR4**	—	—	—	108700	135400	43300	374
3.5	26360	1.6	410	11.0	**311 L4**	—	**BN160MR4**	—	—	—	108500	135200	43200	348
3.7	25315	2.2	394	11.0	**313 L4**	—	**BN160MR4**	—	—	—	132500	156800	52400	360
3.7	24890	1.9	387	22.0	—	**313 R4**	**BN160MR4**	—	—	—	131800	156000	52100	362
4.0	23334	1.0	363	15.0	—	**310 R4**	**BN160MR4**	—	—	—	88500	111300	41500	338
4.1	22612	2.3	352	11.0	**313 L4**	—	**BN160MR4**	—	—	—	128000	151500	50500	360
4.1	22424	0.9	349	7.5	**309 L4**	—	**BN160MR4**	—	—	—	72300	93300	22100	324
4.1	22329	1.8	348	11.0	**311 L4**	—	**BN160MR4**	—	—	—	103200	128600	40900	348
4.2	22198	2.4	346	22.0	—	**313 R4**	**BN160MR4**	—	—	—	127300	150700	50200	362
4.2	21920	1.8	341	22.0	—	**311 R4**	**BN160MR4**	—	—	—	102700	127900	40600	374
4.3	21465	1.3	334	15.0	—	**310 R4**	**BN160MR4**	—	—	—	86300	108600	40300	338
4.5	20662	1.9	322	22.0	—	**311 R4**	**BN160MR4**	—	—	—	100900	125600	39800	374
4.7	19834	2.2	309	22.0	—	**313 R4**	**BN160MR4**	—	—	—	123100	145700	48300	362
4.7	19589	1.2	305	15.0	—	**310 R4**	**BN160MR4**	—	—	—	84000	105600	39100	338
4.7	20178	1.9	304	18.0	**313 L3**	—	**BN160MR4**	—	—	—	122500	145000	48100	360
4.9	19618	1.2	295	18.0	**310 L3**	—	**BN160MR4**	—	—	—	83200	104600	38700	336
4.9	18856	2.0	294	22.0	—	**311 R4**	**BN160MR4**	—	—	—	98100	122200	38600	374
4.9	19342	1.4	291	18.0	**311 L3**	—	**BN160MR4**	—	—	—	97900	121900	38500	348
5.1	18274	0.9	284	15.0	—	**309 R4**	**BN160MR4**	—	—	—	68000	87700	20700	326
5.1	18182	1.4	283	15.0	—	**310 R4**	**BN160MR4**	—	—	—	82100	103300	38100	338
5.1	18059	2.7	281	22.0	—	**313 R4**	**BN160MR4**	—	—	—	119700	141700	46800	362
5.4	17081	2.2	266	22.0	—	**311 R4**	**BN160MR4**	—	—	—	95300	118700	37400	374
5.6	16593	1.4	258	15.0	—	**310 R4**	**BN160MR4**	—	—	—	79900	100500	37000	338
5.6	16577	1.0	258	15.0	—	**309 R4**	**BN160MR4**	—	—	—	67400	87000	20500	326
5.7	16763	2.7	252	18.0	**313 L3**	—	**BN160MR4**	—	—	—	115900	137100	45200	360
5.8	16556	1.1	249	18.0	**310 L3**	—	**BN160MR4**	—	—	—	79100	99400	36600	336
5.9	16298	2.1	245	18.0	**311 L3**	—	**BN160MR4**	—	—	—	93000	115800	36400	348
6.1	15217	2.7	237	22.0	—	**313 R4**	**BN160MR4**	—	—	—	113700	134600	44200	362
6.2	15031	1.6	234	15.0	—	**310 R4**	**BN160MR4**	—	—	—	77600	97600	35800	338
6.2	14917	1.1	232	15.0	—	**309 R4**	**BN160MR4**	—	—	—	65300	84200	19800	326
6.3	15286	1.4	230	18.0	**310 L3**	—	**BN160MR4**	—	—	—	77200	97100	35600	336
6.3	14693	2.4	229	22.0	—	**311 R4**	**BN160MR4**	—	—	—	91100	113400	35500	374
7.0	13223	1.7	206	15.0	—	**310 R4**	**BN160MR4**	—	—	—	74700	93900	34300	338
7.0	13209	1.1	206	15.0	—	**307 R4**	**BN160MR4**	**M4LC4**	27300	34300	62000	81200	23700	314
7.0	13209	1.5	206	15.0	—	**309 R4**	**BN160MR4**	—	—	—	63000	81200	19000	326
7.1	13473	2.5	203	18.0	**311 L3**	—	**BN160MR4**	—	—	—	87800	109400	34100	348
7.1	13406	1.6	202	18.0	**310 L3**	—	**BN160MR4**	—	—	—	74200	93300	34100	336
7.1	13392	1.2	202	11.0	**309 L3**	—	**BN160MR4**	—	—	—	62600	80700	18900	324
7.2	12889	2.7	201	22.0	—	**313 R4**	**BN160MR4**	—	—	—	108200	128000	41900	362
7.3	12728	2.7	198	22.0	—	**311 R4**	**BN160MR4**	—	—	—	87200	108600	33900	374
7.5	12700	2.5	191	18.0	**311 L3**	—	**BN160MR4**	—	—	—	86300	107500	33500	348
7.6	12249	1.1	191	15.0	—	**307 R4**	**BN160MR4**	**M4LC4**	26600	33400	60600	79400	23200	314
7.6	12249	1.4	191	15.0	—	**309 R4**	**BN160MR4**	—	—	—	61600	79400	18500	326
7.6	12164	1.9	189	15.0	—	**310 R4**	**BN160MR4**	—	—	—	72800	91500	33400	338
7.8	11857	2.7	185	22.0	—	**313 R4**	**BN160MR4**	—	—	—	105500	124900	40700	362
7.9	12131	1.2	183	11.0	**309 L3**	—	**BN160MR4**	—	—	—	60800	78400	18300	324
7.9	11708	2.7	182	22.0	—	**311 R4**	**BN160MR4**	—	—	—	85100	106000	32900	374
8.1	11773	1.6	177	18.0	**310 L3**	—	**BN160MR4**	—	—	—	71400	89800	32600	336
8.1	11759	1.0	177	11.0	**307 L3**	—	**BN160MR4**	**M4LC4**	26000	32600	59300	77700	22600	312
8.4	11352	2.9	171	18.0	**311 L3**	—	**BN160MR4**	—	—	—	83400	103900	32200	348
8.7	10611	1.5	165	15.0	—	**309 R4**	**BN160MR4**	—	—	—	59000	76100	17700	326
8.8	10870	2.0	164	18.0	**310 L3**	—	**BN160MR4**	—	—	—	69700	87600	31800	336
8.9	10731	1.0	162	11.0	**307 L3**	—	**BN160MR4**	**M4LC4**	25200	31600	57700	75600	21900	312
8.9	10731	1.5	162	11.0	**309 L3**	—	**BN160MR4**	—	—	—	58600	75600	17500	324
8.9	10701	3.0	161	18.0	**311 L3**	—	**BN160MR4**	—	—	—	82000	102100	31600	348
9.0	10303	2.1	160	15.0	—	**310 R4**	**BN160MR4**	—	—	—	69300	87100	31600	338
9.1	10141	0.9	158	12.0	—	**306 R4**	**BN160MR4**	**M4LC4**	22000	24900	52100	60700	16500	302
9.3	9918	2.7	154	22.0	—	**311 R4**	**BN160MR4**	—	—	—	80900	100800	31200	374
9.5	9761	1.9	152	15.0	—	**309 R4**	**BN160MR4**	—	—	—	57500	74200	17200	326
9.5	9761	1.4	152	15.0	—	**307 R4**	**BN160MR4**	**M4LC4**	24100	30300	55400	72700	21000	314
9.8	9743	2.8	147	40.0	—	**311 R3**	**BN160MR4**	—	—	—	79700	99300	30600	374
9.8	9721	1.4	146	11.0	**307 L3**	—	**BN160MR4**	**M4LC4**	24400	30600	56000	73300	21200	312
10.2	9416	2.2	142	18.0	**310 L3**	—	**BN160MR4**	—	—	—	66700	83900	30300	336
10.4	9218	1.2	139	11.0	**307 L3**	—	**BN160MR4**	**M4LC4**	24000	30100	55100	72200	20800	312
10.4	9218	1.7	139	11.0	**309 L3**	—	**BN160MR4**	—	—	—	56000	72200	16700	324

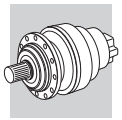

P_1 = 11 kW

n_2 min^{-1}	M_{n2} Nm	f_S	i	P_t kW					Rn_2 [N] MC	MZ	HC/PC	HZ/PZ	FZ	
10.6	8728	2.4	136	15.0	—	**310 R4**	**BN160MR4**	—	—	—	65900	82900	29900	338
11.0	8662	2.4	130	18.0	**310 L3**	—	**BN160MR4**	—	—	—	65100	81900	29500	336
11.4	8362	1.6	126	11.0	**307 L3**	—	**BN160MR4**	**M4LC4**	23200	29100	53500	70100	20200	312
11.4	8362	2.0	126	11.0	**309 L3**	—	**BN160MR4**	—	—	—	54400	70100	16100	324
11.6	7968	1.4	124	15.0	—	**307 R4**	**BN160MR4**	**M4LC4**	24800	31100	56900	74500	21600	314
11.9	8056	1.0	121	7.5	**306 L3**	—	**BN160MR4**	**M4LC4**	20600	23400	49200	57300	15500	300
12.0	7955	1.1	120	22.0	—	**307 R3**	**BN160MR4**	**M4LC4**	22800	28600	52700	69100	19800	314
12.0	7955	1.6	120	22.0	—	**309 R3**	**BN160MR4**	—	—	—	53600	69100	15900	326
12.0	7955	2.2	120	22.0	—	**310 R3**	**BN160MR4**	—	—	—	63500	79800	28600	338
12.1	7905	2.5	119	18.0	**310 L3**	—	**BN160MR4**	—	—	—	63300	79600	28600	336
12.7	7525	1.4	113	11.0	**307 L3**	—	**BN160MR4**	**M4LC4**	22400	28100	51800	67900	19500	312
12.7	7525	2.1	113	11.0	**309 L3**	—	**BN160MR4**	—	—	—	52700	67900	15600	324
12.8	7462	1.0	112	7.5	**306 L3**	—	**BN160MR4**	**M4LC4**	20100	22800	48100	56000	15100	300
13.0	7337	2.7	110	18.0	**310 L3**	—	**BN160MR4**	—	—	—	61900	77900	27900	336
13.8	6922	1.3	104	7.5	**306 L3**	—	**BN160MR4**	**M4LC4**	19600	22200	47000	54700	14700	300
14.3	6696	2.8	101	18.0	**310 L3**	—	**BN160MR4**	—	—	—	60300	75800	27000	336
14.4	6663	1.9	100	11.0	**307 L3**	—	**BN160MR4**	**M4LC4**	21500	27000	50000	65500	18700	312
14.4	6663	2.5	100	11.0	**309 L3**	—	**BN160MR4**	—	—	—	50800	65500	15000	324
14.5	6576	1.3	99.0	22.0	—	**307 R3**	**BN160MR4**	**M4LC4**	21400	26900	49800	65200	18600	314
14.5	6576	1.9	99.0	22.0	—	**309 R3**	**BN160MR4**	—	—	—	50600	65200	14900	326
14.5	6576	2.5	99.0	22.0	—	**310 R3**	**BN160MR4**	—	—	—	59900	75400	26900	338
14.6	6544	1.0	98.5	14.0	—	**306 R3**	**BN160MR4**	**M4LC4**	19200	21800	46200	53800	14400	302
15.5	6179	2.0	93.0	11.0	**307 L3**	—	**BN160MR4**	**M4LC4**	21000	26300	48900	64000	18200	312
15.5	6179	2.4	93.0	11.0	**309 L3**	—	**BN160MR4**	—	—	—	49600	64000	14600	324
16.3	5864	1.5	88.3	7.5	**306 L3**	—	**BN160MR4**	**M4LC4**	18500	21000	44700	52100	13900	300
17.0	5629	1.3	84.7	14.0	—	**306 R3**	**BN160MR4**	**M4LC4**	18300	20700	44200	51400	13700	302
17.3	5541	1.8	83.4	22.0	—	**307 R3**	**BN160MR4**	**M4LC4**	20200	25400	47300	62000	17600	314
17.3	5541	2.5	83.4	22.0	—	**309 R3**	**BN160MR4**	—	—	—	48000	62000	14100	326
17.3	5541	2.7	83.4	22.0	—	**310 R3**	**BN160MR4**	—	—	—	56900	71600	25400	338
17.6	5437	1.3	81.9	7.5	**306 L3**	—	**BN160MR4**	**M4LC4**	18100	20500	43700	50900	13600	300
17.9	5353	1.9	80.6	11.0	**307 L3**	—	**BN160MR4**	**M4LC4**	20000	25100	46800	61300	17400	312
17.9	5353	2.8	80.6	11.0	**309 L3**	—	**BN160MR4**	—	—	—	47600	61300	13900	324
18.3	5223	2.7	78.6	22.0	—	**310 R3**	**BN160MR4**	—	—	—	55900	70300	24900	338
18.3	5223	2.1	78.6	22.0	—	**307 R3**	**BN160MR4**	**M4LC4**	19800	24900	46500	60900	17200	314
18.6	5131	0.9	77.2	7.5	**305 L3**	—	**BN160MR4**	**M4LC4**	13900	16100	25700	30900	8930	288
18.7	5115	1.6	77.0	7.5	**306 L3**	—	**BN160MR4**	**M4LC4**	17700	20100	42900	50000	13300	300
19.4	4924	2.4	74.1	11.0	**307 L3**	—	**BN160MR4**	**M4LC4**	19400	24400	45600	59800	16900	312
19.8	4842	1.5	72.9	14.0	—	**306 R3**	**BN160MR4**	**M4LC4**	17400	19700	42200	49200	13100	302
19.9	4975	1.1	72.5	13.0	**306 L2**	—	**BN160MR4**	**M4LC4**	17400	19700	42100	49100	13000	300
20.1	4766	2.1	71.8	22.0	—	**307 R3**	**BN160MR4**	**M4LC4**	19200	24100	45200	59200	16700	314
20.1	4766	2.7	71.8	22.0	—	**309 R3**	**BN160MR4**	—	—	—	45900	59200	13400	326
20.1	4766	2.7	71.8	22.0	—	**310 R3**	**BN160MR4**	—	—	—	54400	68400	24100	338
21.3	4486	1.6	67.5	14.0	—	**306 R3**	**BN160MR4**	**M4LC4**	17000	19200	41300	48000	12700	302
22.1	4333	1.7	65.2	7.5	**306 L3**	—	**BN160MR4**	**M4LC4**	16800	19000	40800	47500	12600	300
22.2	4318	2.7	65.0	22.0	—	**310 R3**	**BN160MR4**	—	—	—	52800	66400	23400	338
22.2	4318	2.5	65.0	22.0	—	**307 R3**	**BN160MR4**	**M4LC4**	18600	23300	43900	57500	16200	314
22.2	4318	2.6	65.0	22.0	—	**309 R3**	**BN160MR4**	—	—	—	44600	57500	12900	326
22.8	4190	1.0	63.1	14.0	—	**305 R3**	—	**M4LC4**	13300	15400	24700	29700	8540	278
22.8	4189	1.1	63.1	7.5	**305 L3**	—	**BN160MR4**	**M4LC4**	13300	15400	24700	29700	8540	288
23.8	4019	2.8	60.5	11.0	**307 L3**	—	**BN160MR4**	**M4LC4**	18200	22800	42900	56300	15800	312
24.8	3859	2.0	58.1	14.0	—	**306 R3**	**BN160MR4**	**M4LC4**	16100	18300	39400	45900	12100	302
25.6	3860	1.3	56.3	13.0	**306 L2**	—	**BN160MR4**	**M4LC4**	16000	18100	39100	45500	12000	300
25.8	3714	2.7	55.9	22.0	—	**310 R3**	**BN160MR4**	—	—	—	50500	63500	22200	338
25.8	3714	2.7	55.9	22.0	—	**307 R3**	**BN160MR4**	**M4LC4**	17700	22200	41900	55000	15400	314
25.8	3714	2.7	55.9	22.0	—	**309 R3**	**BN160MR4**	—	—	—	42600	55000	12300	326
25.8	3829	0.9	55.8	9.0	**305 L2**	—	**BN160MR4**	**M4LC4**	12500	14400	23300	28100	8010	288
26.6	3599	1.0	54.2	14.0	—	**305 R3**	—	**M4LC4**	12700	14600	23600	28400	8120	278
27.0	3548	0.9	53.4	7.5	**304 L3**	—	**BN160MR4**	**M4LC4**	12600	14500	23500	28300	8080	288
27.0	3548	1.1	53.4	7.5	**305 L3**	—	**BN160MR4**	**M4LC4**	12600	14500	23500	28300	8080	288
27.0	3537	2.0	53.2	7.5	**306 L3**	—	**BN160MR4**	**M4LC4**	15700	17800	38400	44700	11800	300
28.6	3339	1.3	50.3	14.0	—	**305 R3**	—	**M4LC4**	12300	14200	23100	27800	7920	278
31	3207	2.6	46.7	18.0	**307 L2**	—	**BN160MR4**	**M4LC4**	16700	20900	39700	52100	14500	312
31	3096	1.4	46.6	14.0	—	**305 R3**	—	**M4LC4**	12000	13900	22600	27200	7720	278
31	3191	2.0	46.5	13.0	**306 L2**	—	**BN160MR4**	**M4LC4**	15000	17000	36900	43000	11300	300
31	3075	2.4	46.3	14.0	—	**306 R3**	**BN160MR4**	**M4LC4**	15000	16900	36800	42900	11200	302

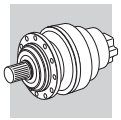

P_1 = 11 kW

n_2 min^{-1}	M_{n2} Nm	f_S	i	P_t kW					Rn_2 [N] MC	MZ	HC/PC	HZ/PZ	FZ	
32	3063	1.2	44.6	9.0	**305 L2**	**—**	**BN160MR4**	**M4LC4**	11900	13700	22300	26800	7610	288
32	2960	2.7	44.6	22.0	**—**	**310 R3**	**BN160MR4**	**—**	—	—	47200	59300	20600	338
32	2960	2.7	44.6	22.0	**—**	**307 R3**	**BN160MR4**	**M4LC4**	16400	20600	39200	51300	14300	314
32	2960	2.7	44.6	22.0	**—**	**309 R3**	**BN160MR4**	**—**	—	—	39800	51300	11400	326
33	2896	1.1	43.6	7.5	**304 L3**	**—**	**BN160MR4**	**M4LC4**	11800	13600	22100	26600	7550	288
34	2828	1.3	42.6	14.0	**—**	**305 R3**	**—**	**M4LC4**	11700	13500	22000	26400	7490	278
37	2605	2.5	39.2	14.0	**—**	**306 R3**	**BN160MR4**	**M4LC4**	14100	16000	35000	40800	10600	302
37	2638	2.5	38.4	13.0	**306 L2**	**—**	**BN160MR4**	**M4LC4**	14100	15900	34800	40600	10600	300
38	2635	1.1	38.4	9.0	**304 L2**	**—**	**BN160MR4**	**M4LC4**	11300	13000	21300	25600	7240	288
38	2635	1.6	38.4	9.0	**305 L2**	**—**	**BN160MR4**	**M4LC4**	11300	13000	21300	25600	7240	288
38	2507	2.7	37.7	22.0	**—**	**310 R3**	**BN160MR4**	**—**	—	—	44900	56400	19500	338
38	2507	2.7	37.7	22.0	**—**	**307 R3**	**BN160MR4**	**M4LC4**	15500	19500	37300	48800	13500	314
38	2507	2.7	37.7	22.0	**—**	**309 R3**	**BN160MR4**	**—**	—	—	37900	48800	10800	326
39	2467	1.8	37.1	14.0	**—**	**305 R3**	**—**	**M4LC4**	11200	12900	21100	25400	7160	278
40	2454	1.5	35.8	9.0	**305 L2**	**—**	**BN160MR4**	**M4LC4**	11000	12700	20800	25100	7070	288
43	2206	2.6	33.2	14.0	**—**	**306 R3**	**BN160MR4**	**M4LC4**	13400	15200	33300	38800	10100	302
46	2101	2.7	31.6	22.0	**—**	**307 R3**	**BN160MR4**	**M4LC4**	14600	18400	35400	46300	12700	314
46	2101	2.7	31.6	22.0	**—**	**309 R3**	**BN160MR4**	**—**	—	—	35900	46300	10200	326
46	2090	1.8	31.5	14.0	**—**	**305 R3**	**—**	**M4LC4**	10600	12200	20100	24100	6770	278
47	2111	1.0	30.8	9.0	**303 L2**	**—**	**BN160MR4**	**M4LC4**	10500	12100	19900	24000	6720	264
47	2111	1.3	30.8	9.0	**304 L2**	**—**	**BN160MR4**	**M4LC4**	10500	12100	19900	24000	6720	288
47	2111	2.0	30.8	9.0	**305 L2**	**—**	**BN160MR4**	**M4LC4**	10500	12100	19900	24000	6720	288
54	1814	1.0	26.4	9.0	**303 L2**	**—**	**BN160MR4**	**M4LC4**	9960	11500	19000	22900	6390	264
54	1814	1.9	26.4	9.0	**305 L2**	**—**	**BN160MR4**	**M4LC4**	9960	11500	19000	22900	6390	288
56	1706	2.1	25.7	14.0	**—**	**305 R3**	**—**	**M4LC4**	9870	11400	18900	22700	6330	278
59	1683	1.3	24.5	9.0	**303 L2**	**—**	**BN160MR4**	**M4LC4**	9720	11200	18600	22400	6230	264
59	1683	1.9	24.5	9.0	**304 L2**	**—**	**BN160MR4**	**M4LC4**	9720	11200	18600	22400	6230	288
59	1683	2.3	24.5	9.0	**305 L2**	**—**	**BN160MR4**	**M4LC4**	9720	11200	18600	22400	6230	288
63	1560	1.3	22.7	9.0	**303 L2**	**—**	**BN160MR4**	**M4LC4**	9470	10900	18200	21900	6080	264
63	1560	1.8	22.7	9.0	**304 L2**	**—**	**BN160MR4**	**M4LC4**	9470	10900	18200	21900	6080	288
63	1560	2.5	22.7	9.0	**305 L2**	**—**	**BN160MR4**	**M4LC4**	9470	10900	18200	21900	6080	288
69	1425	1.3	20.8	9.0	**303 L2**	**—**	**BN160MR4**	**M4LC4**	9190	10600	17700	21300	5900	264
69	1425	2.1	20.8	9.0	**304 L2**	**—**	**BN160MR4**	**M4LC4**	9190	10600	17700	21300	5900	288
69	1425	2.3	20.8	9.0	**305 L2**	**—**	**BN160MR4**	**M4LC4**	9190	10600	17700	21300	5900	288
72	1378	0.9	20.1	7.5	**301 L2**	**—**	**—**	**M4LC4**	2890	2890	8410	9660	1900	254
75	1319	2.6	19.2	18.0	**—**	**306 R2**	**BN160MR4**	**M4LC4**	11200	12600	28300	33000	8380	302
75	1319	1.2	19.2	18.0	**—**	**303 R2**	**—**	**M4LC4**	8960	10300	17300	20800	5750	266
75	1319	2.2	19.2	18.0	**—**	**305 R2**	**—**	**M4LC4**	8960	10300	17300	20800	5750	278
79	1247	1.1	18.2	7.5	**301 L2**	**—**	**—**	**M4LC4**	2860	2860	8330	9580	1880	254
79	1243	1.6	18.1	9.0	**303 L2**	**—**	**BN160MR4**	**M4LC4**	8780	10100	17000	20400	5630	264
79	1243	2.4	18.1	9.0	**304 L2**	**—**	**BN160MR4**	**M4LC4**	8780	10100	17000	20400	5630	288
79	1243	2.9	18.1	9.0	**305 L2**	**—**	**BN160MR4**	**M4LC4**	8780	10100	17000	20400	5630	288
86	1156	2.1	16.8	18.0	**—**	**304 R2**	**—**	**M4LC4**	8570	9900	16600	20000	5500	278
91	1090	2.7	15.9	18.0	**—**	**306 R2**	**BN160MR4**	**M4LC4**	10500	11900	26700	31100	7870	302
91	1090	1.7	15.9	18.0	**—**	**303 R2**	**—**	**M4LC4**	8410	9710	16300	19700	5390	266
91	1090	2.7	15.9	18.0	**—**	**305 R2**	**—**	**M4LC4**	8410	9710	16300	19700	5390	278
94	1053	1.6	15.3	9.0	**303 L2**	**—**	**BN160MR4**	**M4LC4**	8310	9590	16200	19500	5330	264
94	1053	2.7	15.3	9.0	**304 L2**	**—**	**BN160MR4**	**M4LC4**	8310	9590	16200	19500	5330	288
94	1053	2.9	15.3	9.0	**305 L2**	**—**	**BN160MR4**	**M4LC4**	8310	9590	16200	19500	5330	288
97	1018	1.3	14.8	7.5	**301 L2**	**—**	**—**	**M4LC4**	2670	2670	7840	9010	1760	254
98	1013	0.9	14.8	12.0	**—**	**301 R2**	**—**	**M4LC4**	2610	2610	7670	8810	1710	256
105	938	2.7	13.7	18.0	**—**	**306 R2**	**BN160MR4**	**M4LC4**	9960	11300	25500	29700	7480	302
105	938	2.1	13.7	18.0	**—**	**303 R2**	**—**	**M4LC4**	8000	9230	15600	18800	5130	266
105	938	2.7	13.7	18.0	**—**	**304 R2**	**—**	**M4LC4**	8000	9230	15600	18800	5130	278
105	938	2.7	13.7	18.0	**—**	**305 R2**	**—**	**M4LC4**	8000	9230	15600	18800	5130	278
115	860	1.9	12.5	9.0	**303 L2**	**—**	**BN160MR4**	**M4LC4**	7770	8970	15200	18300	4980	264
119	831	1.5	12.1	7.5	**301 L2**	**—**	**—**	**M4LC4**	2500	2500	7380	8480	1640	254
122	812	1.4	11.8	12.0	**—**	**301 R2**	**—**	**M4LC4**	2420	2420	7180	8240	1590	256
132	747	2.6	10.9	18.0	**—**	**306 R2**	**BN160MR4**	**M4LC4**	9230	10500	23900	27800	6930	302
132	747	2.5	10.9	18.0	**—**	**303 R2**	**—**	**M4LC4**	7410	8560	14600	17600	4760	266
132	747	2.6	10.9	18.0	**—**	**304 R2**	**—**	**M4LC4**	7410	8560	14600	17600	4760	278
132	747	2.6	10.9	18.0	**—**	**305 R2**	**—**	**M4LC4**	7410	8560	14600	17600	4760	278
149	684	1.1	9.67	11.0	**303 L1**	**—**	**BN160MR4**	**M4LC4**	7120	8220	14100	16900	4570	264
156	633	2.7	9.23	18.0	**—**	**306 R2**	**BN160MR4**	**M4LC4**	8730	9900	22700	26400	6560	302
156	633	2.7	9.23	18.0	**—**	**303 R2**	**—**	**M4LC4**	7010	8100	13900	16700	4500	266

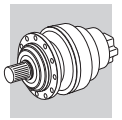

A

P_1 = 11 kW

n_2 min^{-1}	M_{n2} Nm	f_S	i	P_t kW					Rn_2 [N] MC	MZ	HC/PC	HZ/PZ	FZ	
156	633	2.7	9.23	18.0	—	**304 R2**	—	**M4LC4**	7010	8100	13900	16700	4500	278
156	633	2.7	9.23	18.0	—	**305 R2**	—	**M4LC4**	7010	8100	13900	16700	4500	278
160	637	1.0	9.00	7.5	**301 L1**	—	—	**M4LC4**	2260	2260	6750	7750	1490	254
165	600	1.0	8.74	11.0	—	**300 R2**	—	**M4LC4**	6550	7560	13000	15700	4200	246
165	600	1.8	8.74	7.5	—	**301 R2**	—	**M4LC4**	2100	2100	6310	7250	1380	256
192	531	2.3	7.50	11.0	**303 L1**	—	**BN160MR4**	**M4LC4**	6400	7390	12800	15400	4100	264
200	510	1.5	7.20	7.5	**301 L1**	—	—	**M4LC4**	2050	2050	6180	7100	1350	254
202	490	1.2	7.13	12.0	—	**300 R2**	—	**M4LC4**	2090	2090	6300	7230	1380	246
202	490	2.1	7.13	12.0	—	**301 R2**	—	**M4LC4**	2050	2050	6170	7080	1350	256
250	409	1.2	5.77	7.5	**300 L1**	—	—	**M4LC4**	1950	1950	5910	6790	1280	244
250	409	2.3	5.77	7.5	**301 L1**	—	—	**M4LC4**	1950	1950	5910	6790	1280	254
338	302	1.6	4.26	7.5	**300 L1**	—	—	**M4LC4**	1760	1760	5390	6200	1160	244
338	302	2.9	4.26	7.5	**301 L1**	—	—	**M4LC4**	1760	1760	5390	6200	1160	254
414	246	1.9	3.48	7.5	**300 L1**	—	—	**M4LC4**	1610	1610	4970	5710	1060	244

P_1 = 15 kW

n_2 min^{-1}	M_{n2} Nm	f_S	i	P_t kW					Rn_2 [N] MC	MZ	HC/PC	HZ/PZ	FZ	
0.77	163217	1.0	1893	18.0	**317 L4**	—	**BN160L4**	—	—	—	442000	470000	150000	406
0.92	137526	1.2	1595	18.0	**317 L4**	—	**BN160L4**	—	—	—	442000	470000	150000	406
1.1	113688	1.5	1318	18.0	**317 L4**	—	**BN160L4**	—	—	—	434300	462400	147000	406
1.2	106719	1.1	1237	18.0	**316 L4**	—	**BN160L4**	—	—	—	331400	368600	144000	396
1.3	97796	1.7	1134	18.0	**317 L4**	—	**BN160L4**	—	—	—	415100	442000	139800	406
1.3	95233	1.0	1104	18.0	**315 L4**	—	**BN160L4**	—	—	—	192600	226200	83200	384
1.4	89921	1.1	1043	18.0	**315 L4**	—	**BN160L4**	—	—	—	189400	222300	81600	384
1.4	89921	1.5	1043	18.0	**316 L4**	—	**BN160L4**	—	—	—	314800	350100	136000	396
1.4	89477	0.9	1038	15.0	**314 L4**	—	**BN160L4**	—	—	—	189100	222000	81400	372
1.4	89028	2.0	1032	18.0	**317 L4**	—	**BN160L4**	—	—	—	403600	429700	135500	406
1.5	82213	1.8	953	50.0	—	**317 R4**	**BN160L4**	—	—	—	394100	419600	132000	406
1.6	80193	1.2	930	18.0	**315 L4**	—	**BN160L4**	—	—	—	183000	214800	78500	384
1.6	79847	0.9	926	15.0	**314 L4**	—	**BN160L4**	—	—	—	182700	214500	78400	372
1.6	78419	1.0	909	40.0	—	**315 R4**	**BN160L4**	—	—	—	181700	213400	77900	386
1.6	77931	2.1	904	18.0	**317 L4**	—	**BN160L4**	—	—	—	387800	412900	129600	406
1.7	74334	1.4	862	18.0	**315 L4**	—	**BN160L4**	—	—	—	178800	210000	76600	384
1.7	74334	1.7	862	18.0	**316 L4**	—	**BN160L4**	—	—	—	297400	330700	127600	396
1.7	73967	1.1	858	15.0	**314 L4**	—	**BN160L4**	—	—	—	178600	209700	76400	372
1.8	70068	1.9	812	18.0	**316 L4**	—	**BN160L4**	—	—	—	292100	324900	125100	396
1.8	69272	2.4	803	50.0	—	**317 R4**	**BN160L4**	—	—	—	374300	398500	124600	406
1.8	68302	2.7	792	18.0	**317 L4**	—	**BN160L4**	—	—	—	372700	396900	124100	406
1.9	67457	1.3	782	40.0	—	**315 R4**	**BN160L4**	—	—	—	173700	203900	74100	386
2.0	63904	1.6	741	18.0	**315 L4**	—	**BN160L4**	—	—	—	170900	200700	72800	384
2.0	63904	2.0	741	18.0	**316 L4**	—	**BN160L4**	—	—	—	284200	316100	121400	396
2.0	63628	1.3	738	15.0	**314 L4**	—	**BN160L4**	—	—	—	170700	200400	72700	372
2.0	62634	2.1	726	18.0	**316 L4**	—	**BN160L4**	—	—	—	282500	314100	120500	396
2.0	62012	2.9	719	18.0	**317 L4**	—	**BN160L4**	—	—	—	362100	385500	120100	406
2.1	59039	2.2	685	18.0	**316 L4**	—	**BN160L4**	—	—	—	277500	308600	118200	396
2.2	58368	2.8	677	50.0	—	**317 R4**	**BN160L4**	—	—	—	355600	378600	117700	406
2.2	57923	1.7	672	18.0	**315 L4**	—	**BN160L4**	—	—	—	165900	194800	70500	384
2.2	57637	1.4	668	15.0	**314 L4**	—	**BN160L4**	—	—	—	165700	194500	70300	372
2.2	56839	1.6	659	40.0	—	**315 R4**	**BN160L4**	—	—	—	165000	193700	70000	386
2.3	55766	0.9	647	22.0	—	**313 R4**	**BN160L4**	—	—	—	150500	178100	60400	362
2.3	54583	1.0	633	11.0	**313 L4**	—	**BN160L4**	—	—	—	152700	180700	61400	360
2.3	53978	2.9	626	50.0	—	**317 R4**	**BN160L4**	—	—	—	347300	369800	114700	406
2.3	53845	2.3	624	18.0	**316 L4**	—	**BN160L4**	—	—	—	270000	300300	114600	396
2.3	53755	1.9	623	40.0	—	**315 R4**	**BN160L4**	—	—	—	162300	190500	68700	386
2.3	53755	2.1	623	45.0	—	**316 R4**	**BN160L4**	—	—	—	269800	300100	114500	386
2.4	52929	1.1	614	22.0	—	**314 R4**	**BN160L4**	—	—	—	161500	189600	68400	374
2.5	50955	2.0	591	18.0	**315 L4**	—	**BN160L4**	—	—	—	159700	187500	67500	384
2.5	50955	2.4	591	18.0	**316 L4**	—	**BN160L4**	—	—	—	265500	295300	112500	396
2.5	50703	1.6	588	15.0	**314 L4**	—	**BN160L4**	—	—	—	159500	187200	67400	372
2.6	48805	2.5	566	18.0	**316 L4**	—	**BN160L4**	—	—	—	262100	291500	110900	396

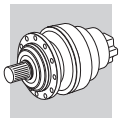

P_1 = 15 kW

n_2 min^{-1}	M_{n2} Nm	f_S	i	P_t kW					Rn_2 [N] MC	MZ	HC/PC	HZ/PZ	FZ	
2.6	48619	1.1	564	11.0	**313 L4**	**—**	**BN160L4**	**—**	—	—	147500	174500	59100	360
2.6	47793	1.7	554	15.0	**314 L4**	**—**	**BN160L4**	**—**	—	—	156600	183900	66100	372
2.7	46100	1.1	535	22.0	**—**	**313 R4**	**BN160L4**	**—**	—	—	145100	171800	58000	362
2.7	46004	2.2	533	18.0	**315 L4**	**—**	**BN160L4**	**—**	—	—	154900	181800	65200	384
2.7	46004	2.6	533	18.0	**316 L4**	**—**	**BN160L4**	**—**	—	—	257500	286400	108700	396
2.8	45531	1.5	528	22.0	**—**	**314 R4**	**BN160L4**	**—**	—	—	154400	181300	65000	374
2.8	45293	2.2	525	40.0	**—**	**315 R4**	**BN160L4**	**—**	—	—	154100	181000	64900	386
2.8	45293	2.6	525	45.0	**—**	**316 R4**	**BN160L4**	**—**	—	—	256300	285000	108200	386
2.8	44298	1.1	514	11.0	**313 L4**	**—**	**BN160L4**	**—**	—	—	143400	169700	57300	360
2.9	44164	1.0	512	11.0	**311 L4**	**—**	**BN160L4**	**—**	—	—	116000	144500	46500	348
2.9	42783	1.2	496	22.0	**—**	**313 R4**	**BN160L4**	**—**	—	—	141900	168000	56600	362
3.0	42650	1.9	495	15.0	**314 L4**	**—**	**BN160L4**	**—**	—	—	151400	177700	63600	372
3.0	41983	2.4	487	18.0	**315 L4**	**—**	**BN160L4**	**—**	—	—	150700	176900	63300	384
3.0	41983	2.8	487	18.0	**316 L4**	**—**	**BN160L4**	**—**	—	—	250500	278600	105500	396
3.2	39509	2.0	458	15.0	**314 L4**	**—**	**BN160L4**	**—**	—	—	148000	173700	62000	372
3.2	38957	1.4	452	11.0	**313 L4**	**—**	**BN160L4**	**—**	—	—	138000	163300	54900	360
3.2	38843	1.2	450	22.0	**—**	**313 R4**	**BN160L4**	**—**	—	—	137900	163200	54800	362
3.3	38364	1.8	445	22.0	**—**	**314 R4**	**BN160L4**	**—**	—	—	146700	172200	61400	374
3.3	38030	2.6	441	18.0	**315 L4**	**—**	**BN160L4**	**—**	—	—	146300	171700	61200	384
3.3	37764	1.0	438	22.0	**—**	**311 R4**	**BN160L4**	**—**	—	—	110600	137800	44100	374
3.5	36282	2.2	421	22.0	**—**	**314 R4**	**BN160L4**	**—**	—	—	144200	169300	60300	374
3.5	35597	1.1	413	22.0	**—**	**311 R4**	**BN160L4**	**—**	—	—	108700	135400	43300	374
3.6	35388	1.2	410	11.0	**311 L4**	**—**	**BN160L4**	**—**	—	—	108500	135200	43200	348
3.6	35294	2.8	409	40.0	**—**	**315 R4**	**BN160L4**	**—**	—	—	143000	167900	59700	386
3.7	33985	1.6	394	11.0	**313 L4**	**—**	**BN160L4**	**—**	—	—	132500	156800	52400	360
3.8	33467	2.3	388	15.0	**314 L4**	**—**	**BN160L4**	**—**	—	—	140800	165300	58700	372
3.8	33414	1.4	387	22.0	**—**	**313 R4**	**BN160L4**	**—**	—	—	131800	156000	52100	362
4.1	30571	2.6	354	22.0	**—**	**314 R4**	**BN160L4**	**—**	—	—	137000	160800	56900	374
4.1	30356	1.7	352	11.0	**313 L4**	**—**	**BN160L4**	**—**	—	—	128000	151500	50500	360
4.2	29976	1.3	348	11.0	**311 L4**	**—**	**BN160L4**	**—**	—	—	103200	128600	40900	348
4.2	29801	1.8	346	22.0	**—**	**313 R4**	**BN160L4**	**—**	—	—	127300	150700	50200	362
4.3	29427	1.3	341	22.0	**—**	**311 R4**	**BN160L4**	**—**	—	—	102700	127900	40600	374
4.4	28817	1.0	334	15.0	**—**	**310 R4**	**BN160L4**	**—**	—	—	84600	106300	39400	338
4.5	27738	1.4	322	22.0	**—**	**311 R4**	**BN160L4**	**—**	—	—	100900	125600	39800	374
4.6	27083	2.9	314	15.0	**314 L4**	**—**	**BN160L4**	**—**	—	—	132100	155100	54700	372
4.7	26627	1.7	309	22.0	**—**	**313 R4**	**BN160L4**	**—**	—	—	123100	145700	48300	362
4.8	27088	1.4	304	18.0	**313 L3**	**—**	**BN160L4**	**—**	—	—	122500	145000	48100	360
5.0	25313	1.5	294	22.0	**—**	**311 R4**	**BN160L4**	**—**	—	—	98100	122200	38600	374
5.0	25966	1.0	291	18.0	**311 L3**	**—**	**BN160L4**	**—**	—	—	97900	121900	38500	348
5.2	24409	1.1	283	15.0	**—**	**310 R4**	**BN160L4**	**—**	—	—	82100	103300	38100	338
5.2	24244	2.0	281	22.0	**—**	**313 R4**	**BN160L4**	**—**	—	—	119700	141700	46800	362
5.5	22930	1.6	266	22.0	**—**	**311 R4**	**BN160L4**	**—**	—	—	95300	118700	37400	374
5.7	22276	1.0	258	15.0	**—**	**310 R4**	**BN160L4**	**—**	—	—	79900	100500	37000	338
5.8	22504	2.0	252	18.0	**313 L3**	**—**	**BN160L4**	**—**	—	—	115900	137100	45200	360
6.0	21879	1.6	245	18.0	**311 L3**	**—**	**BN160L4**	**—**	—	—	93000	115800	36400	348
6.1	21360	2.4	240	25.0	**314 L3**	**—**	**BN160L4**	**—**	—	—	119300	140100	48800	372
6.2	20428	2.0	237	22.0	**—**	**313 R4**	**BN160L4**	**—**	—	—	113700	134600	44200	362
6.2	20178	1.2	234	15.0	**—**	**310 R4**	**BN160L4**	**—**	—	—	77600	97600	35800	338
6.3	20522	1.0	230	18.0	**310 L3**	**—**	**BN160L4**	**—**	—	—	77200	97100	35600	336
6.4	19725	1.8	229	22.0	**—**	**311 R4**	**BN160L4**	**—**	—	—	91100	113400	35500	374
7.0	18603	2.4	209	18.0	**313 L3**	**—**	**BN160L4**	**—**	—	—	109400	129500	42400	360
7.1	17751	1.2	206	15.0	**—**	**310 R4**	**BN160L4**	**—**	—	—	74700	93900	34300	338
7.1	17733	1.1	206	15.0	**—**	**309 R4**	**BN160L4**	**—**	—	—	63000	81200	19000	326
7.2	18087	1.8	203	18.0	**311 L3**	**—**	**BN160L4**	**—**	—	—	87800	109400	34100	348
7.2	17997	1.2	202	18.0	**310 L3**	**—**	**BN160L4**	**—**	—	—	74200	93300	34100	336
7.2	17979	0.9	202	11.0	**309 L3**	**—**	**BN160L4**	**—**	—	—	61300	79100	18400	324
7.3	17304	2.0	201	22.0	**—**	**313 R4**	**BN160L4**	**—**	—	—	108200	128000	41900	362
7.4	17087	2.0	198	22.0	**—**	**311 R4**	**BN160L4**	**—**	—	—	87200	108600	33900	374
7.5	17265	2.8	194	18.0	**313 L3**	**—**	**BN160L4**	**—**	—	—	107000	126700	41400	360
7.6	17049	1.9	191	18.0	**311 L3**	**—**	**BN160L4**	**—**	—	—	86300	107500	33500	348
7.7	16444	1.1	191	15.0	**—**	**309 R4**	**BN160L4**	**—**	—	—	61600	79400	18500	326
7.7	16329	1.4	189	15.0	**—**	**310 R4**	**BN160L4**	**—**	—	—	72800	91500	33400	338
7.9	15918	2.0	185	22.0	**—**	**313 R4**	**BN160L4**	**—**	—	—	105500	124900	40700	362
8.0	15718	2.0	182	22.0	**—**	**311 R4**	**BN160L4**	**—**	—	—	85100	106000	32900	374
8.0	16231	2.4	182	18.0	**313 L3**	**—**	**BN160L4**	**—**	—	—	105100	124300	40500	360

A

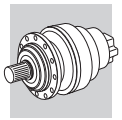

P_1 = 15 kW

n_2 min^{-1}	M_{n2} Nm	f_S	i	P_t kW					Rn_2 [N] MC	MZ	HC/PC	HZ/PZ	FZ	
8.2	15805	1.2	177	18.0	**310 L3**	—	**BN160L4**	—	—	—	71400	89800	32600	336
8.3	15675	2.9	176	18.0	**313 L3**	—	**BN160L4**	—	—	—	104000	123000	40100	360
8.5	15240	2.1	171	18.0	**311 L3**	—	**BN160L4**	—	—	—	83400	103900	32200	348
8.8	14245	1.1	165	15.0	—	**309 R4**	**BN160L4**	—	—	—	59000	76100	17700	326
8.9	14593	1.5	164	18.0	**310 L3**	—	**BN160L4**	—	—	—	69700	87600	31800	336
9.0	14406	1.1	162	11.0	**309 L3**	—	**BN160L4**	—	—	—	58600	75600	17500	324
9.1	14365	2.2	161	18.0	**311 L3**	—	**BN160L4**	—	—	—	82000	102100	31600	348
9.1	13832	1.6	160	15.0	—	**310 R4**	**BN160L4**	—	—	—	69300	87100	31600	338
9.5	13314	2.0	154	22.0	—	**311 R4**	**BN160L4**	—	—	—	80900	100800	31200	374
9.5	13645	2.9	153	40.0	—	**313 R3**	**BN160L4**	—	—	—	99700	118000	38200	362
9.6	13104	1.4	152	15.0	—	**309 R4**	**BN160L4**	—	—	—	57500	74200	17200	326
9.9	13109	2.4	147	18.0	**311 L3**	—	**BN160L4**	—	—	—	79700	99300	30700	348
10.0	13079	2.1	147	40.0	—	**311 R3**	**BN160L4**	—	—	—	79700	99300	30600	374
10.0	13050	1.0	146	11.0	**307 L3**	—	**BN160L4**	—	24400	30600	56000	73300	21200	312
10.3	12641	1.6	142	18.0	**310 L3**	—	**BN160L4**	—	—	—	66700	83900	30300	336
10.5	12375	1.3	139	11.0	**309 L3**	—	**BN160L4**	—	—	—	56000	72200	16700	324
10.7	11716	1.8	136	15.0	—	**310 R4**	**BN160L4**	—	—	—	65900	82900	29900	338
11.0	11875	2.5	133	18.0	**311 L3**	—	**BN160L4**	—	—	—	77400	96400	29700	348
11.2	11629	1.8	130	18.0	**310 L3**	—	**BN160L4**	—	—	—	65100	81900	29500	336
11.6	11225	1.2	126	11.0	**307 L3**	—	**BN160L4**	—	23200	29100	53500	70100	20200	312
11.6	11225	1.5	126	11.0	**309 L3**	—	**BN160L4**	—	—	—	54400	70100	16100	324
11.6	11194	2.6	126	18.0	**311 L3**	—	**BN160L4**	—	—	—	76100	94700	29100	348
11.8	10697	1.0	124	15.0	—	**307 R4**	**BN160L4**	—	24800	31100	56900	74500	21600	314
11.8	11021	2.7	124	40.0	—	**311 R3**	**BN160L4**	—	—	—	75700	94300	28900	374
12.2	10679	1.2	120	22.0	—	**309 R3**	**BN160L4**	—	—	—	53600	69100	15900	326
12.2	10679	1.6	120	22.0	—	**310 R3**	**BN160L4**	—	—	—	63500	79800	28600	338
12.3	10612	1.9	119	18.0	**310 L3**	—	**BN160L4**	—	—	—	63300	79600	28600	336
12.7	10215	2.8	115	18.0	**311 L3**	—	**BN160L4**	—	—	—	74000	92200	28200	348
12.9	10102	1.0	113	11.0	**307 L3**	—	**BN160L4**	—	22400	28100	51800	67900	19500	312
12.9	10102	1.5	113	11.0	**309 L3**	—	**BN160L4**	—	—	—	52700	67900	15600	324
13.2	9850	2.0	110	18.0	**310 L3**	—	**BN160L4**	—	—	—	61900	77900	27900	336
13.9	9061	1.5	105	15.0	—	**307 R4**	**BN160L4**	—	24100	30300	55400	72700	21000	314
14.0	9293	1.0	104	7.5	**306 L3**	—	**BN160L4**	—	19200	21700	46000	53600	14400	300
14.5	8989	2.1	101	18.0	**310 L3**	—	**BN160L4**	—	—	—	60300	75800	27000	336
14.6	8945	1.4	100	11.0	**307 L3**	—	**BN160L4**	—	21500	27000	50000	65500	18700	312
14.6	8945	1.8	100	11.0	**309 L3**	—	**BN160L4**	—	—	—	50800	65500	15000	324
14.7	8828	1.0	99.0	22.0	—	**307 R3**	**BN160L4**	—	21400	26900	49800	65200	18600	314
14.7	8828	1.4	99.0	22.0	—	**309 R3**	**BN160L4**	—	—	—	50600	65200	14900	326
14.7	8828	1.9	99.0	22.0	—	**310 R3**	**BN160L4**	—	—	—	59900	75400	26900	338
15.7	8295	1.5	93.0	11.0	**307 L3**	—	**BN160L4**	—	21000	26300	48900	64000	18200	312
15.7	8295	1.8	93.0	11.0	**309 L3**	—	**BN160L4**	—	—	—	49600	64000	14600	324
16.0	8143	2.3	91.3	18.0	**310 L3**	—	**BN160L4**	—	—	—	58500	73600	26200	336
16.5	7872	1.1	88.3	7.5	**306 L3**	—	**BN160L4**	—	18100	20500	43800	51000	13600	300
17.2	7557	1.0	84.7	14.0	—	**306 R3**	**BN160L4**	—	18300	20700	44200	51400	13700	302
17.5	7438	1.4	83.4	22.0	—	**307 R3**	**BN160L4**	—	20200	25400	47300	62000	17600	314
17.5	7438	1.9	83.4	22.0	—	**309 R3**	**BN160L4**	—	—	—	48000	62000	14100	326
17.5	7438	2.0	83.4	22.0	—	**310 R3**	**BN160L4**	—	—	—	56900	71600	25400	338
17.8	7300	0.9	81.9	7.5	**306 L3**	—	**BN160L4**	—	17700	20000	42800	49900	13300	300
18.1	7186	1.4	80.6	11.0	**307 L3**	—	**BN160L4**	—	20000	25100	46800	61300	17400	312
18.1	7186	2.1	80.6	11.0	**309 L3**	—	**BN160L4**	—	—	—	47600	61300	13900	324
18.2	7163	2.4	80.3	18.0	**310 L3**	—	**BN160L4**	—	—	—	56300	70800	25100	336
18.6	7012	2.0	78.6	22.0	—	**310 R3**	**BN160L4**	—	—	—	55900	70300	24900	338
18.6	7012	1.6	78.6	22.0	—	**307 R3**	**BN160L4**	—	19800	24900	46500	60900	17200	314
19.0	6867	1.2	77.0	7.5	**306 L3**	—	**BN160L4**	—	17700	20100	42900	50000	13300	300
19.7	6610	1.8	74.1	11.0	**307 L3**	—	**BN160L4**	—	19400	24400	45600	59800	16900	312
19.7	6610	2.3	74.1	11.0	**309 L3**	—	**BN160L4**	—	—	—	46400	59800	13500	324
19.8	6590	2.7	73.9	18.0	**310 L3**	—	**BN160L4**	—	—	—	54900	69000	24400	336
20.0	6500	1.1	72.9	14.0	—	**306 R3**	**BN160L4**	—	17400	19700	42200	49200	13100	302
20.3	6399	1.6	71.8	22.0	—	**307 R3**	**BN160L4**	—	19200	24100	45200	59200	16700	314
20.3	6399	2.0	71.8	22.0	—	**309 R3**	**BN160L4**	—	—	—	45900	59200	13400	326
20.3	6399	2.0	71.8	22.0	—	**310 R3**	**BN160L4**	—	—	—	54400	68400	24100	338
21.6	6022	1.2	67.5	14.0	—	**306 R3**	**BN160L4**	—	17000	19200	41300	48000	12700	302
22.4	5817	1.3	65.2	7.5	**306 L3**	—	**BN160L4**	—	16800	19000	40800	47500	12600	300
22.5	5796	2.0	65.0	22.0	—	**310 R3**	**BN160L4**	—	—	—	52800	66400	23400	338
22.5	5796	1.9	65.0	22.0	—	**307 R3**	**BN160L4**	—	18600	23300	43900	57500	16200	314

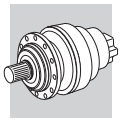

P_1 = 15 kW

n_2 min^{-1}	M_{n2} Nm	f_S	i	P_t kW					Rn_2 [N] MC	MZ	HC/PC	HZ/PZ	FZ	
22.5	5796	1.9	65.0	22.0	—	**309 R3**	**BN160L4**	—	—	—	44600	57500	12900	326
23.3	5582	3.0	62.6	18.0	**310 L3**	—	**BN160L4**	—	—	—	52200	65700	23100	336
24.1	5396	2.1	60.5	11.0	**307 L3**	—	**BN160L4**	—	18200	22800	42900	56300	15800	312
24.1	5396	2.6	60.5	11.0	**309 L3**	—	**BN160L4**	—	—	—	43600	56300	12600	324
25.1	5180	1.5	58.1	14.0	—	**306 R3**	**BN160L4**	—	16100	18300	39400	45900	12100	302
26.0	5182	1.0	56.3	13.0	**306 L2**	—	**BN160L4**	**M5SB4**	16000	18100	39100	45500	12000	300
26.1	4986	2.0	55.9	22.0	—	**310 R3**	**BN160L4**	—	—	—	50500	63500	22200	338
26.1	4986	2.0	55.9	22.0	—	**307 R3**	**BN160L4**	—	17700	22200	41900	55000	15400	314
26.1	4986	2.0	55.9	22.0	—	**309 R3**	**BN160L4**	—	—	—	42600	55000	12300	326
27.4	4748	1.5	53.2	7.5	**306 L3**	—	**BN160L4**	—	15700	17800	38400	44700	11800	300
28.5	4571	2.3	51.3	11.0	**307 L3**	—	**BN160L4**	—	17200	21600	40900	53500	14900	312
28.5	4571	2.9	51.3	11.0	**309 L3**	—	**BN160L4**	—	—	—	41500	53500	12000	324
31	4305	1.9	46.7	18.0	**307 L2**	—	**BN160L4**	**M5SB4**	16700	20900	39700	52100	14500	312
31	4305	2.9	46.7	18.0	**309 L2**	—	**BN160L4**	—	—	—	40400	52100	11600	324
31	4284	1.5	46.5	13.0	**306 L2**	—	**BN160L4**	**M5SB4**	15000	17000	36900	43000	11300	300
32	4128	1.8	46.3	14.0	—	**306 R3**	**BN160L4**	—	15000	16900	36800	42900	11200	302
33	3973	2.0	44.6	22.0	—	**310 R3**	**BN160L4**	—	—	—	47200	59300	20600	338
33	3973	2.0	44.6	22.0	—	**307 R3**	**BN160L4**	—	16400	20600	39200	51300	14300	314
33	3973	2.0	44.6	22.0	—	**309 R3**	**BN160L4**	—	—	—	39800	51300	11400	326
37	3497	1.9	39.2	14.0	—	**306 R3**	**BN160L4**	—	14100	16000	35000	40800	10600	302
38	3559	2.3	38.6	18.0	**307 L2**	—	**BN160L4**	**M5SB4**	15600	19600	37500	49200	13600	312
38	3541	1.8	38.4	13.0	**306 L2**	—	**BN160L4**	**M5SB4**	14100	15900	34800	40600	10600	300
38	3537	1.2	38.4	9.0	**305 L2**	—	**BN160L4**	—	11300	13000	21300	25600	7240	288
39	3366	2.0	37.7	22.0	—	**310 R3**	**BN160L4**	—	—	—	44900	56400	19500	338
39	3366	2.0	37.7	22.0	—	**307 R3**	**BN160L4**	—	—	—	37900	48800	10800	314
39	3366	2.0	37.7	22.0	—	**309 R3**	**BN160L4**	—	15500	19500	37300	48800	13500	326
41	3295	1.1	35.8	9.0	**305 L2**	—	**BN160L4**	—	11000	12700	20800	25100	7070	288
44	2962	2.0	33.2	14.0	—	**306 R3**	**BN160L4**	—	13400	15200	33300	38800	10100	302
44	3046	2.3	33.1	13.0	**306 L2**	—	**BN160L4**	**M5SB4**	13400	15100	33300	38800	10000	300
46	2821	2.0	31.6	22.0	—	**307 R3**	**BN160L4**	—	14600	18400	35400	46300	12700	314
46	2821	2.0	31.6	22.0	—	**309 R3**	**BN160L4**	—	—	—	35900	46300	10200	326
47	2834	1.0	30.8	9.0	**304 L2**	—	**BN160L4**	—	10500	12100	19900	24000	6720	288
47	2834	1.5	30.8	9.0	**305 L2**	—	**BN160L4**	—	10500	12100	19900	24000	6720	288
51	2620	2.6	28.4	13.0	**306 L2**	—	**BN160L4**	**M5SB4**	12700	14400	31800	37100	9550	300
55	2435	1.4	26.4	9.0	**305 L2**	—	**BN160L4**	—	9960	11500	19000	22900	6390	288
55	2427	2.6	26.4	13.0	**306 L2**	—	**BN160L4**	**M5SB4**	12400	14000	31100	36200	9310	300
60	2259	1.0	24.5	9.0	**303 L2**	—	**BN160L4**	—	9490	11000	18200	21900	6090	264
60	2259	1.4	24.5	9.0	**304 L2**	—	**BN160L4**	—	9720	11200	18600	22400	6230	288
60	2259	1.7	24.5	9.0	**305 L2**	—	**BN160L4**	—	9720	11200	18600	22400	6230	288
64	2095	1.0	22.7	9.0	**303 L2**	—	**BN160L4**	—	9470	10900	18200	21900	6080	264
64	2095	1.3	22.7	9.0	**304 L2**	—	**BN160L4**	—	9470	10900	18200	21900	6080	288
64	2095	1.9	22.7	9.0	**305 L2**	—	**BN160L4**	—	9470	10900	18200	21900	6080	288
64	2088	2.9	22.7	13.0	**306 L2**	—	**BN160L4**	**M5SB4**	11800	13400	29700	34600	8850	300
70	1913	1.0	20.8	9.0	**303 L2**	—	**BN160L4**	—	8980	10400	17300	20900	5760	264
70	1913	1.5	20.8	9.0	**304 L2**	—	**BN160L4**	—	9190	10600	17700	21300	5900	288
70	1913	1.7	20.8	9.0	**305 L2**	—	**BN160L4**	—	9190	10600	17700	21300	5900	288
76	1771	2.0	19.2	18.0	—	**306 R2**	**BN160L4**	—	11200	12600	28300	33000	8380	302
81	1669	1.2	18.1	9.0	**303 L2**	—	**BN160L4**	—	8780	10100	17000	20400	5630	264
81	1669	1.8	18.1	9.0	**304 L2**	—	**BN160L4**	—	8780	10100	17000	20400	5630	288
81	1669	2.2	18.1	9.0	**305 L2**	—	**BN160L4**	—	8780	10100	17000	20400	5630	288
92	1464	2.0	15.9	18.0	—	**306 R2**	**BN160L4**	—	10500	11900	26700	31100	7870	302
95	1414	1.2	15.3	9.0	**303 L2**	—	**BN160L4**	—	8310	9590	16200	19500	5330	264
95	1414	2.0	15.3	9.0	**304 L2**	—	**BN160L4**	—	8310	9590	16200	19500	5330	288
95	1414	2.2	15.3	9.0	**305 L2**	—	**BN160L4**	—	8310	9590	16200	19500	5330	288
107	1259	2.0	13.7	18.0	—	**306 R2**	**BN160L4**	—	9960	11300	25500	29700	7480	302
117	1154	1.4	12.5	9.0	**303 L2**	—	**BN160L4**	—	7770	8970	15200	18300	4980	264
117	1154	2.3	12.5	9.0	**304 L2**	—	**BN160L4**	—	7770	8970	15200	18300	4980	288
117	1154	2.5	12.5	9.0	**305 L2**	—	**BN160L4**	—	7770	8970	15200	18300	4980	288
134	1003	2.0	10.9	18.0	—	**306 R2**	**BN160L4**	—	9230	10500	23900	27800	6930	302
158	850	2.0	9.23	18.0	—	**306 R2**	**BN160L4**	—	8730	9900	22700	26400	6560	302
195	713	1.7	7.50	11.0	**303 L1**	—	**BN160L4**	**M5SB4**	6550	7560	13000	15700	4200	264
222	625	3.0	6.57	12.0	**304 L1**	—	**BN160L4**	**M5SB4**	6260	7230	12500	15100	4020	288
235	589	2.4	6.20	11.0	**303 L1**	—	**BN160L4**	**M5SB4**	6140	7090	12300	14800	3940	264
274	507	2.9	5.33	11.0	**303 L1**	—	**BN160L4**	**M5SB4**	5840	6750	11800	14200	3750	264

A

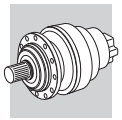

P_1 = 18.5 kW

n_2 min^{-1}	M_{n2} Nm	f_S	i	P_t kW					Rn_2 [N] MC	MZ	HC/PC	HZ/PZ	FZ	
0.92	169802	1.0	1595	18.0	**317 L4**	—	**BN180M4**	—	—	—	442000	470000	150000	406
1.1	147863	2.4	1389	30.0	**319 L4**	—	**BN180M4**	—	—	—	636100	700800	199500	426
1.1	140370	1.2	1318	18.0	**317 L4**	—	**BN180M4**	—	—	—	434300	462400	147000	406
1.2	131765	0.9	1237	18.0	**316 L4**	—	**BN180M4**	—	—	—	331400	368600	144000	396
1.2	127194	2.8	1195	30.0	**319 L4**	—	**BN180M4**	—	—	—	608000	669900	189700	426
1.3	120748	1.4	1134	18.0	**317 L4**	—	**BN180M4**	—	—	—	415100	442000	139800	406
1.4	112771	2.4	1059	22.0	**318 L4**	—	**BN180M4**	—	—	—	503000	520700	182200	416
1.4	111025	0.9	1043	18.0	**315 L4**	—	**BN180M4**	—	—	—	189400	222300	81600	384
1.4	111025	1.2	1043	18.0	**316 L4**	—	**BN180M4**	—	—	—	314800	350100	136000	396
1.4	109922	1.6	1032	18.0	**317 L4**	—	**BN180M4**	—	—	—	403600	429700	135500	406
1.5	101508	1.4	953	50.0	—	**317 R4**	**BN180M4**	—	—	—	394100	419600	132000	406
1.6	99014	0.9	930	18.0	**315 L4**	—	**BN180M4**	—	—	—	183000	214800	78500	384
1.6	97007	2.8	911	22.0	**318 L4**	—	**BN180M4**	—	—	—	487700	497700	173300	416
1.6	96221	1.7	904	18.0	**317 L4**	—	**BN180M4**	—	—	—	387800	412900	129600	406
1.7	91780	1.1	862	18.0	**315 L4**	—	**BN180M4**	—	—	—	178800	210000	76600	384
1.7	91780	1.4	862	18.0	**316 L4**	—	**BN180M4**	—	—	—	297400	330700	127600	396
1.8	86513	1.5	812	18.0	**316 L4**	—	**BN180M4**	—	—	—	292100	324900	125100	396
1.8	85530	1.9	803	50.0	—	**317 R4**	**BN180M4**	—	—	—	374300	398500	124600	406
1.8	84332	2.2	792	18.0	**317 L4**	—	**BN180M4**	—	—	—	372700	396900	124100	406
1.9	83289	1.1	782	40.0	—	**315 R4**	**BN180M4**	—	—	—	173700	203900	74100	386
2.0	78901	1.3	741	18.0	**315 L4**	—	**BN180M4**	—	—	—	170900	200700	72800	384
2.0	78901	1.6	741	18.0	**316 L4**	—	**BN180M4**	—	—	—	284200	316100	121400	396
2.0	78561	1.0	738	15.0	**314 L4**	—	**BN180M4**	—	—	—	170700	200400	72700	372
2.0	77333	1.7	726	18.0	**316 L4**	—	**BN180M4**	—	—	—	282500	314100	120500	396
2.0	76565	2.3	719	18.0	**317 L4**	—	**BN180M4**	—	—	—	362100	385500	120100	406
2.1	72895	1.8	685	18.0	**316 L4**	—	**BN180M4**	—	—	—	277500	308600	118200	396
2.2	72067	2.3	677	50.0	—	**317 R4**	**BN180M4**	—	—	—	355600	378600	117700	406
2.2	71517	1.4	672	18.0	**315 L4**	—	**BN180M4**	—	—	—	165900	194800	70500	384
2.2	71164	1.1	668	15.0	**314 L4**	—	**BN180M4**	—	—	—	165700	194500	70300	372
2.2	70179	1.3	659	40.0	—	**315 R4**	**BN180M4**	—	—	—	165000	193700	70000	386
2.3	66647	2.3	626	50.0	—	**317 R4**	**BN180M4**	—	—	—	347300	369800	114700	406
2.3	66482	1.9	624	18.0	**316 L4**	—	**BN180M4**	—	—	—	270000	300300	114600	396
2.3	66371	1.5	623	40.0	—	**315 R4**	**BN180M4**	—	—	—	162300	190500	68700	386
2.3	66371	1.7	623	45.0	—	**316 R4**	**BN180M4**	—	—	—	269800	300100	114500	386
2.4	65863	2.7	619	18.0	**317 L4**	—	**BN180M4**	—	—	—	346100	368500	114200	406
2.5	62914	1.6	591	18.0	**315 L4**	—	**BN180M4**	—	—	—	159700	187500	67500	384
2.5	62914	1.9	591	18.0	**316 L4**	—	**BN180M4**	—	—	—	265500	295300	112500	396
2.5	62603	1.3	588	15.0	**314 L4**	—	**BN180M4**	—	—	—	159500	187200	67400	372
2.6	60260	2.1	566	18.0	**316 L4**	—	**BN180M4**	—	—	—	262100	291500	110900	396
2.6	59010	1.4	554	15.0	**314 L4**	—	**BN180M4**	—	—	—	156600	183900	66100	372
2.6	58741	3.0	552	18.0	**317 L4**	—	**BN180M4**	—	—	—	334400	356100	110000	406
2.7	56801	1.8	533	18.0	**315 L4**	—	**BN180M4**	—	—	—	154900	181800	65200	384
2.7	56801	2.1	533	18.0	**316 L4**	—	**BN180M4**	—	—	—	257500	286400	108700	396
2.8	55924	1.8	525	40.0	—	**315 R4**	**BN180M4**	—	—	—	154100	181000	64900	386
2.8	55924	2.1	525	45.0	—	**316 R4**	**BN180M4**	—	—	—	256300	285000	108200	386
2.8	55368	3.0	520	50.0	—	**317 R4**	**BN180M4**	—	—	—	328500	349800	107800	406
3.0	52659	1.5	495	15.0	**314 L4**	—	**BN180M4**	—	—	—	151400	177700	63600	372
3.0	51836	1.9	487	18.0	**315 L4**	—	**BN180M4**	—	—	—	150700	176900	63300	384
3.0	51836	2.3	487	18.0	**316 L4**	—	**BN180M4**	—	—	—	250500	278600	105500	396
3.2	48782	1.6	458	15.0	**314 L4**	—	**BN180M4**	—	—	—	148000	173700	62000	372
3.3	47121	2.5	443	45.0	—	**316 R4**	**BN180M4**	—	—	—	243500	270800	102200	386
3.3	46956	2.1	441	18.0	**315 L4**	—	**BN180M4**	—	—	—	146300	171700	61200	384
3.3	46956	2.5	441	18.0	**316 L4**	—	**BN180M4**	—	—	—	243200	270500	102100	396
3.6	43577	2.3	409	40.0	—	**315 R4**	**BN180M4**	—	—	—	143000	167900	59700	386
3.6	43577	2.6	409	45.0	—	**316 R4**	**BN180M4**	—	—	—	237800	264500	99600	386
3.8	41321	1.9	388	15.0	**314 L4**	—	**BN180M4**	—	—	—	140800	165300	58700	372
4.0	39353	2.5	370	18.0	**315 L4**	—	**BN180M4**	—	—	—	138700	162900	57700	384
4.0	39353	2.8	370	18.0	**316 L4**	—	**BN180M4**	—	—	—	230600	256500	96200	396
4.2	36717	2.6	345	40.0	—	**315 R4**	**BN180M4**	—	—	—	135900	159500	56400	386
4.2	36717	2.9	345	45.0	—	**316 R4**	**BN180M4**	—	—	—	225900	251200	94000	386
4.6	33439	2.3	314	15.0	**314 L4**	—	**BN180M4**	—	—	—	132100	155100	54700	372
4.8	33446	1.2	304	18.0	**313 L3**	—	**BN180M4**	—	—	—	122500	145000	48100	360
5.4	28611	2.9	269	40.0	—	**315 R4**	**BN180M4**	—	—	—	126100	148000	51900	386
5.8	27786	1.6	252	50.0	**313 L3**	—	**BN180M4**	—	—	—	267500	284800	85800	360
6.0	27014	1.3	245	18.0	**311 L3**	—	**BN180M4**	—	—	—	93000	115800	36400	348

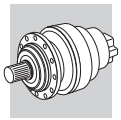

P_1 = 18.5 kW

n_2 min^{-1}	M_{n2} Nm	f_S	i	P_t kW					Rn_2 [N] MC	MZ	HC/PC	HZ/PZ	FZ	
6.1	26503	2.5	241	30.0	**315 L3**	**—**	**BN180M4**	**—**	—	—	122000	143200	50000	384
6.1	26373	2.0	240	25.0	**314 L3**	**—**	**BN180M4**	**—**	—	—	121800	143000	50000	372
7.0	22970	2.0	209	18.0	**313 L3**	**—**	**BN180M4**	**—**	—	—	109400	129500	42400	360
7.1	22686	2.8	206	25.0	**314 L3**	**—**	**BN180M4**	**—**	—	—	116400	136700	47500	372
7.2	22332	1.5	203	18.0	**311 L3**	**—**	**BN180M4**	**—**	—	—	87800	109400	34100	348
7.2	22221	1.0	202	18.0	**310 L3**	**—**	**BN180M4**	**—**	—	—	74200	93300	34100	336
7.5	21317	2.2	194	18.0	**313 L3**	**—**	**BN180M4**	**—**	—	—	107000	126700	41400	360
7.6	21050	1.5	191	18.0	**311 L3**	**—**	**BN180M4**	**—**	—	—	86300	107500	33500	348
8.0	20040	1.9	182	18.0	**313 L3**	**—**	**BN180M4**	**—**	—	—	105100	124300	40500	360
8.2	19515	0.9	177	18.0	**310 L3**	**—**	**BN180M4**	**—**	—	—	71400	89800	32600	336
8.3	19354	2.3	176	18.0	**313 L3**	**—**	**BN180M4**	**—**	—	—	104000	123000	40100	360
8.5	18816	1.7	171	18.0	**311 L3**	**—**	**BN180M4**	**—**	—	—	83400	103900	32200	348
8.9	18018	1.2	164	18.0	**310 L3**	**—**	**BN180M4**	**—**	—	—	69700	87600	31800	336
9.0	17962	2.6	163	18.0	**313 L3**	**—**	**BN180M4**	**—**	—	—	101700	120300	39100	360
9.1	17736	1.8	161	18.0	**311 L3**	**—**	**BN180M4**	**—**	—	—	82000	102100	31600	348
9.5	16847	2.3	153	40.0	**—**	**313 R3**	**BN180M4**	**—**	—	—	99700	118000	38200	362
9.7	16649	2.7	151	18.0	**313 L3**	**—**	**BN180M4**	**—**	—	—	99400	117600	38100	360
9.9	16186	2.0	147	18.0	**311 L3**	**—**	**BN180M4**	**—**	—	—	79700	99300	30700	348
10.0	16149	1.7	147	40.0	**—**	**311 R3**	**BN180M4**	**—**	—	—	79700	99300	30600	374
10.2	15745	2.8	143	18.0	**313 L3**	**—**	**BN180M4**	**—**	—	—	97700	115700	37400	360
10.3	15608	1.3	142	18.0	**310 L3**	**—**	**BN180M4**	**—**	—	—	66700	83900	30300	336
10.8	14848	3.0	135	18.0	**313 L3**	**—**	**BN180M4**	**—**	—	—	96000	113600	36700	360
11.0	14662	2.0	133	18.0	**311 L3**	**—**	**BN180M4**	**—**	—	—	77400	96400	29700	348
11.2	14358	1.4	130	18.0	**310 L3**	**—**	**BN180M4**	**—**	—	—	65100	81900	29500	336
11.5	13996	2.9	127	40.0	**—**	**313 R3**	**BN180M4**	**—**	—	—	94300	111600	36000	362
11.6	13821	2.1	126	18.0	**311 L3**	**—**	**BN180M4**	**—**	—	—	76100	94700	29100	348
11.8	13607	2.2	124	40.0	**—**	**311 R3**	**BN180M4**	**—**	—	—	75700	94300	28900	374
12.3	13103	1.5	119	18.0	**310 L3**	**—**	**BN180M4**	**—**	—	—	63300	79600	28600	336
12.7	12613	2.3	115	18.0	**311 L3**	**—**	**BN180M4**	**—**	—	—	74000	92200	28200	348
13.2	12162	1.6	110	18.0	**310 L3**	**—**	**BN180M4**	**—**	—	—	61900	77900	27900	336
14.0	11465	2.5	104	40.0	**—**	**311 R3**	**BN180M4**	**—**	—	—	71900	89600	27300	374
14.1	11425	2.4	104	18.0	**311 L3**	**—**	**BN180M4**	**—**	—	—	71800	89500	27300	348
14.5	11099	1.7	101	18.0	**310 L3**	**—**	**BN180M4**	**—**	—	—	60300	75800	27000	336
15.2	10603	2.6	96.3	40.0	**—**	**311 R3**	**BN180M4**	**—**	—	—	70200	87500	26600	374
16.0	10054	1.9	91.3	18.0	**310 L3**	**—**	**BN180M4**	**—**	—	—	58500	73600	26200	336
16.4	9828	2.7	89.3	18.0	**311 L3**	**—**	**BN180M4**	**—**	—	—	68100	84900	25700	348
18.0	8934	2.9	81.1	40.0	**—**	**311 R3**	**BN180M4**	**—**	—	—	66700	83100	25200	374
18.2	8845	2.0	80.3	18.0	**310 L3**	**—**	**BN180M4**	**—**	—	—	56300	70800	25100	336
18.9	8514	3.0	77.3	18.0	**311 L3**	**—**	**BN180M4**	**—**	—	—	65800	81900	24800	348
19.8	8136	2.2	73.9	18.0	**310 L3**	**—**	**BN180M4**	**—**	—	—	54900	69000	24400	336
23.3	6892	2.4	62.6	18.0	**310 L3**	**—**	**BN180M4**	**—**	—	—	52200	65700	23100	336
27.5	5838	2.7	53.0	18.0	**310 L3**	**—**	**BN180M4**	**—**	—	—	49700	62500	21800	336
31	5315	1.6	46.7	18.0	**307 L2**	**—**	**BN180M4**	**M5LA4**	16700	20900	39700	52100	14500	312
31	5315	2.4	46.7	18.0	**309 L2**	**—**	**BN180M4**	**—**	—	—	40400	52100	11600	324
31	5315	2.7	46.7	22.0	**310 L2**	**—**	**BN180M4**	**—**	—	—	47800	60200	20900	336
31	5289	1.2	46.5	13.0	**306 L2**	**—**	**BN180M4**	**M5LA4**	15000	17000	36900	43000	11300	300
38	4394	1.9	38.6	18.0	**307 L2**	**—**	**BN180M4**	**M5LA4**	15600	19600	37500	49200	13600	312
38	4394	2.8	38.6	18.0	**309 L2**	**—**	**BN180M4**	**—**	—	—	38100	49200	10900	324
38	4372	1.5	38.4	13.0	**306 L2**	**—**	**BN180M4**	**M5LA4**	14100	15900	34800	40600	10600	300
44	3761	1.8	33.1	13.0	**306 L2**	**—**	**BN180M4**	**M5LA4**	13400	15100	33300	38800	10000	300
45	3702	2.5	32.6	18.0	**307 L2**	**—**	**BN180M4**	**M5LA4**	14800	18500	35700	46700	12800	312
48	3490	2.7	30.7	18.0	**307 L2**	**—**	**BN180M4**	**M5LA4**	14500	18200	35000	45900	12600	312
51	3235	2.1	28.4	13.0	**306 L2**	**—**	**BN180M4**	**M5LA4**	12700	14400	31800	37100	9550	300
52	3185	2.9	28.0	18.0	**307 L2**	**—**	**BN180M4**	**M5LA4**	14100	17600	34100	44700	12200	312
55	2997	2.1	26.4	13.0	**306 L2**	**—**	**BN180M4**	**M5LA4**	12400	14000	31100	36200	9310	300
62	2677	3.0	23.5	35.0	**—**	**307 R2**	**BN180M4**	**M5LA4**	13300	16600	32400	42400	11500	314
64	2578	2.4	22.7	13.0	**306 L2**	**—**	**BN180M4**	**M5LA4**	11800	13400	29700	34600	8850	300
81	2054	2.9	18.1	13.0	**306 L2**	**—**	**BN180M4**	**M5LA4**	10700	12100	27200	31700	8020	300
95	1740	2.9	15.3	13.0	**306 L2**	**—**	**BN180M4**	**M5LA4**	10300	11700	26400	30800	7770	300
195	880	1.4	7.50	11.0	**303 L1**	**—**	**BN180M4**	**M5LA4**	6550	7560	13000	15700	4200	264
195	880	2.6	7.50	13.0	**305 L1**	**—**	**BN180M4**	**M5LA4**	6550	7560	13000	15700	4200	288
222	771	2.4	6.57	12.0	**304 L1**	**—**	**BN180M4**	**M5LA4**	6260	7230	12500	15100	4020	288
235	728	1.9	6.20	11.0	**303 L1**	**—**	**BN180M4**	**M5LA4**	6140	7090	12300	14800	3940	264
274	626	2.4	5.33	11.0	**303 L1**	**—**	**BN180M4**	**M5LA4**	5840	6750	11800	14200	3750	264
344	499	2.9	4.25	11.0	**303 L1**	**—**	**BN180M4**	**M5LA4**	5420	6250	11000	13200	3480	264

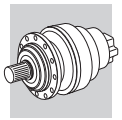

P_1 = 22 kW

n_2 min^{-1}	M_{n2} Nm	f_S	i	P_t kW					Rn_2 [N] MC	MZ	HC/PC	HZ/PZ	FZ	
1.1	175970	2.0	1389	30.0	**319 L4**	—	**BN180L4**	—	—	—	636100	700800	199500	426
1.1	167052	1.0	1318	18.0	**317 L4**	—	**BN180L4**	—	—	—	425400	452900	143700	406
1.2	151372	2.3	1195	30.0	**319 L4**	—	**BN180L4**	—	—	—	608000	669900	189700	426
1.3	143700	1.2	1134	18.0	**317 L4**	—	**BN180L4**	—	—	—	415100	442000	139800	406
1.4	134206	2.0	1059	22.0	**318 L4**	—	**BN180L4**	—	—	—	503000	520700	182200	416
1.4	132128	1.0	1043	18.0	**316 L4**	—	**BN180L4**	—	—	—	314800	350100	136000	396
1.4	130816	1.4	1032	18.0	**317 L4**	—	**BN180L4**	—	—	—	403600	429700	135500	406
1.5	127545	2.7	1007	30.0	**319 L4**	—	**BN180L4**	—	—	—	577600	636300	179200	426
1.5	120803	1.2	953	50.0	—	**317 R4**	**BN180L4**	—	—	—	394100	419600	132000	406
1.6	115536	2.9	912	30.0	**319 L4**	—	**BN180L4**	—	—	—	560700	617700	173400	426
1.6	115446	2.3	911	22.0	**318 L4**	—	**BN180L4**	—	—	—	487700	497700	173300	416
1.6	114851	2.9	906	115.0	—	**319 R4 (C)**	**BN180L4**	—	—	—	559700	616600	173000	428
1.6	114511	1.5	904	18.0	**317 L4**	—	**BN180L4**	—	—	—	387800	412900	129600	406
1.7	109226	0.9	862	18.0	**315 L4**	—	**BN180L4**	—	—	—	178800	210000	76600	384
1.7	109226	1.2	862	18.0	**316 L4**	—	**BN180L4**	—	—	—	297400	330700	127600	396
1.8	102957	1.3	812	18.0	**316 L4**	—	**BN180L4**	—	—	—	292100	324900	125100	396
1.8	101788	1.6	803	50.0	—	**317 R4**	**BN180L4**	—	—	—	374300	398500	124600	406
1.8	100362	1.9	792	18.0	**317 L4**	—	**BN180L4**	—	—	—	372700	396900	124100	406
1.9	99121	0.9	782	40.0	—	**315 R4**	**BN180L4**	—	—	—	173700	203900	74100	386
1.9	97274	2.8	768	22.0	**318 L4**	—	**BN180L4**	—	—	—	463300	472800	163700	416
2.0	93899	1.1	741	18.0	**315 L4**	—	**BN180L4**	—	—	—	170900	200700	72800	384
2.0	93899	1.3	741	18.0	**316 L4**	—	**BN180L4**	—	—	—	284200	316100	121400	396
2.0	92033	1.4	726	18.0	**316 L4**	—	**BN180L4**	—	—	—	282500	314100	120500	396
2.0	91996	2.9	726	22.0	**318 L4**	—	**BN180L4**	—	—	—	455600	464900	160700	416
2.0	91119	2.0	719	18.0	**317 L4**	—	**BN180L4**	—	—	—	362100	385500	120100	406
2.1	86751	1.5	685	18.0	**316 L4**	—	**BN180L4**	—	—	—	277500	308600	118200	396
2.2	85766	1.9	677	50.0	—	**317 R4**	**BN180L4**	—	—	—	355600	378600	117700	406
2.2	85111	1.2	672	18.0	**315 L4**	—	**BN180L4**	—	—	—	165900	194800	70500	384
2.2	84691	1.0	668	15.0	**314 L4**	—	**BN180L4**	—	—	—	165700	194500	70300	372
2.2	83518	1.1	659	40.0	—	**315 R4**	**BN180L4**	—	—	—	165000	193700	70000	386
2.3	79315	2.0	626	50.0	—	**317 R4**	**BN180L4**	—	—	—	347300	369800	114700	406
2.3	79119	1.6	624	18.0	**316 L4**	—	**BN180L4**	—	—	—	270000	300300	114600	396
2.3	78987	1.3	623	40.0	—	**315 R4**	**BN180L4**	—	—	—	162300	190500	68700	386
2.3	78987	1.5	623	45.0	—	**316 R4**	**BN180L4**	—	—	—	269800	300100	114500	386
2.4	78382	2.3	619	18.0	**317 L4**	—	**BN180L4**	—	—	—	346100	368500	114200	406
2.5	74873	1.3	591	18.0	**315 L4**	—	**BN180L4**	—	—	—	159700	187500	67500	384
2.5	74873	1.6	591	18.0	**316 L4**	—	**BN180L4**	—	—	—	265500	295300	112500	396
2.5	74503	1.1	588	15.0	**314 L4**	—	**BN180L4**	—	—	—	159500	187200	67400	372
2.6	71714	1.7	566	18.0	**316 L4**	—	**BN180L4**	—	—	—	262100	291500	110900	396
2.6	70227	1.1	554	15.0	**314 L4**	—	**BN180L4**	—	—	—	156600	183900	66100	372
2.6	69906	2.5	552	18.0	**317 L4**	—	**BN180L4**	—	—	—	334400	356100	110000	406
2.7	67598	1.5	533	18.0	**315 L4**	—	**BN180L4**	—	—	—	154900	181800	65200	384
2.7	67598	1.8	533	18.0	**316 L4**	—	**BN180L4**	—	—	—	257500	286400	108700	396
2.8	66554	1.5	525	40.0	—	**315 R4**	**BN180L4**	—	—	—	154100	181000	64900	386
2.8	66554	1.8	525	45.0	—	**316 R4**	**BN180L4**	—	—	—	256300	285000	108200	386
2.8	65893	2.5	520	50.0	—	**317 R4**	**BN180L4**	—	—	—	328500	349800	107800	406
3.0	62669	1.3	495	15.0	**314 L4**	—	**BN180L4**	—	—	—	151400	177700	63600	372
3.0	62461	2.7	493	18.0	**317 L4**	—	**BN180L4**	—	—	—	323300	344200	105900	406
3.0	61690	1.6	487	18.0	**315 L4**	—	**BN180L4**	—	—	—	150700	176900	63300	384
3.0	61690	1.9	487	18.0	**316 L4**	—	**BN180L4**	—	—	—	250500	278600	105500	396
3.2	58054	1.4	458	15.0	**314 L4**	—	**BN180L4**	—	—	—	148000	173700	62000	372
3.3	56872	2.9	449	18.0	**317 L4**	—	**BN180L4**	—	—	—	314300	334700	102700	406
3.3	56078	2.1	443	45.0	—	**316 R4**	**BN180L4**	—	—	—	243500	270800	102200	386
3.3	55881	1.8	441	18.0	**315 L4**	—	**BN180L4**	—	—	—	146300	171700	61200	384
3.3	55881	2.1	441	18.0	**316 L4**	—	**BN180L4**	—	—	—	243200	270500	102100	396
3.3	55521	2.8	438	50.0	—	**317 R4**	**BN180L4**	—	—	—	312100	332300	101800	406
3.6	51860	1.9	409	40.0	—	**315 R4**	**BN180L4**	—	—	—	143000	167900	59700	386
3.6	51860	2.2	409	45.0	—	**316 R4**	**BN180L4**	—	—	—	237800	264500	99600	386
3.7	50553	2.9	399	50.0	—	**317 R4**	**BN180L4**	—	—	—	303400	323100	98700	406
3.8	49175	1.6	388	15.0	**314 L4**	—	**BN180L4**	—	—	—	140800	165300	58700	372
4.0	46834	2.1	370	18.0	**315 L4**	—	**BN180L4**	—	—	—	138700	162900	57700	384
4.0	46834	2.3	370	18.0	**316 L4**	—	**BN180L4**	—	—	—	230600	256500	96200	396
4.2	43697	2.2	345	40.0	—	**315 R4**	**BN180L4**	—	—	—	135900	159500	56400	386
4.2	43697	2.5	345	45.0	—	**316 R4**	**BN180L4**	—	—	—	225900	251200	94000	386
4.3	42595	2.9	336	50.0	—	**317 R4**	**BN180L4**	—	—	—	288200	306900	93200	406

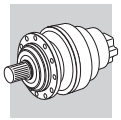

P_1 = 22 kW

n_2 min^{-1}	M_{n2} Nm	f_S	i	P_t kW					Rn_2 [N] MC	MZ	HC/PC	HZ/PZ	FZ	
4.4	41640	2.5	329	18.0	**316 L4**	—	**BN180L4**	—	—	—	222700	247600	92500	396
4.6	39795	2.0	314	15.0	**314 L4**	—	**BN180L4**	—	—	—	132100	155100	54700	372
4.8	39803	1.0	304	18.0	**313 L3**	—	**BN180L4**	—	—	—	122500	145000	48100	360
4.8	38306	2.5	302	18.0	**315 L4**	—	**BN180L4**	—	—	—	130600	153300	54000	384
4.8	38306	2.7	302	18.0	**316 L4**	—	**BN180L4**	—	—	—	217100	241500	90000	396
5.1	36622	2.9	289	45.0	—	**316 R4**	**BN180L4**	—	—	—	214200	238300	88700	386
5.4	34049	2.4	269	40.0	—	**315 R4**	**BN180L4**	—	—	—	126100	148000	51900	386
5.4	34049	2.9	269	45.0	—	**316 R4**	**BN180L4**	—	—	—	209600	233100	86500	386
5.6	33191	2.9	262	50.0	—	**317 R4**	**BN180L4**	—	—	—	267500	284800	85800	406
5.8	33067	1.4	252	18.0	**313 L3**	—	**BN180L4**	—	—	—	115900	137100	45200	360
6.0	32149	1.1	245	18.0	**311 L3**	—	**BN180L4**	—	—	—	93000	115800	36400	348
6.1	31541	2.1	241	30.0	**315 L3**	—	**BN180L4**	—	—	—	122000	143200	50000	384
6.1	31385	1.7	240	25.0	**314 L3**	—	**BN180L4**	—	—	—	121800	143000	50000	372
6.5	28537	2.7	225	40.0	—	**315 R4**	**BN180L4**	—	—	—	119600	140400	48900	386
6.7	27817	2.9	220	50.0	—	**317 R4**	**BN180L4**	—	—	—	253600	270100	80900	406
7.0	27336	1.6	209	18.0	**313 L3**	—	**BN180L4**	—	—	—	109400	129500	42400	360
7.1	27132	2.9	207	30.0	**315 L3**	—	**BN180L4**	—	—	—	116600	136900	47600	384
7.1	26998	2.4	206	25.0	**314 L3**	—	**BN180L4**	—	—	—	116400	136700	47500	372
7.2	26576	1.3	203	18.0	**311 L3**	—	**BN180L4**	—	—	—	87800	109400	34100	348
7.5	25369	1.9	194	18.0	**313 L3**	—	**BN180L4**	—	—	—	107000	126700	41400	360
7.6	25051	1.3	191	18.0	**311 L3**	—	**BN180L4**	—	—	—	86300	107500	33500	348
8.0	23849	1.6	182	18.0	**313 L3**	—	**BN180L4**	—	—	—	105100	124300	40500	360
8.3	23033	2.0	176	18.0	**313 L3**	—	**BN180L4**	—	—	—	104000	123000	40100	360
8.4	22749	2.8	174	25.0	**314 L3**	—	**BN180L4**	—	—	—	110600	129800	44900	372
8.5	22393	1.5	171	18.0	**311 L3**	—	**BN180L4**	—	—	—	83400	103900	32200	348
8.9	21514	3.0	164	25.0	**314 L3**	—	**BN180L4**	—	—	—	108700	127700	44100	372
8.9	21443	1.0	164	18.0	**310 L3**	—	**BN180L4**	—	—	—	69700	87600	31800	336
9.0	21376	2.2	163	18.0	**313 L3**	—	**BN180L4**	—	—	—	101700	120300	39100	360
9.1	21108	1.5	161	18.0	**311 L3**	—	**BN180L4**	—	—	—	82000	102100	31600	348
9.3	20586	2.5	157	55.0	—	**314 R3 (C)**	**BN180L4**	—	—	—	107300	126000	43400	374
9.5	20049	1.9	153	40.0	—	**313 R3**	**BN180L4**	—	—	—	99700	118000	38200	362
9.7	19813	2.3	151	18.0	**313 L3**	—	**BN180L4**	—	—	—	99400	117600	38100	360
9.9	19263	1.7	147	18.0	**311 L3**	—	**BN180L4**	—	—	—	79700	99300	30700	348
10.0	19219	1.4	147	40.0	—	**311 R3**	**BN180L4**	—	—	—	79700	99300	30600	374
10.2	18738	2.4	143	18.0	**313 L3**	—	**BN180L4**	—	—	—	97700	115700	37400	360
10.3	18575	1.1	142	18.0	**310 L3**	—	**BN180L4**	—	—	—	66700	83900	30300	336
10.8	17671	2.5	135	18.0	**313 L3**	—	**BN180L4**	—	—	—	96000	113600	36700	360
11.0	17449	1.7	133	18.0	**311 L3**	—	**BN180L4**	—	—	—	77400	96400	29700	348
11.2	17087	1.2	130	18.0	**310 L3**	—	**BN180L4**	—	—	—	65100	81900	29500	336
11.5	16656	2.4	127	40.0	—	**313 R3**	**BN180L4**	—	—	—	94300	111600	36000	362
11.6	16448	1.8	126	18.0	**311 L3**	—	**BN180L4**	—	—	—	76100	94700	29100	348
11.8	16194	1.9	124	40.0	—	**311 R3**	**BN180L4**	—	—	—	75700	94300	28900	374
12.1	15789	2.7	120	18.0	**313 L3**	—	**BN180L4**	—	—	—	92800	109900	35300	360
12.3	15594	1.3	119	18.0	**310 L3**	—	**BN180L4**	—	—	—	63300	79600	28600	336
12.7	15010	1.9	115	18.0	**311 L3**	—	**BN180L4**	—	—	—	74000	92200	28200	348
13.2	14474	1.4	110	18.0	**310 L3**	—	**BN180L4**	—	—	—	61900	77900	27900	336
13.3	14376	2.9	110	18.0	**313 L3**	—	**BN180L4**	—	—	—	90300	106800	34200	360
13.6	14034	2.8	107	40.0	—	**313 R3**	**BN180L4**	—	—	—	89600	106000	34000	362
14.0	13645	2.1	104	40.0	—	**311 R3**	**BN180L4**	—	—	—	71900	89600	27300	374
14.1	13597	2.0	104	18.0	**311 L3**	—	**BN180L4**	—	—	—	71800	89500	27300	348
14.5	13209	1.4	101	18.0	**310 L3**	—	**BN180L4**	—	—	—	60300	75800	27000	336
15.0	12779	2.9	97.5	40.0	—	**313 R3**	**BN180L4**	—	—	—	87100	103100	32900	362
15.2	12618	2.2	96.3	40.0	—	**311 R3**	**BN180L4**	—	—	—	70200	87500	26600	374
16.0	11965	1.6	91.3	18.0	**310 L3**	—	**BN180L4**	—	—	—	58500	73600	26200	336
16.4	11696	2.3	89.3	18.0	**311 L3**	—	**BN180L4**	—	—	—	68100	84900	25700	348
17.8	10767	2.9	82.2	40.0	—	**313 R3**	**BN180L4**	—	—	—	82800	97900	31100	362
18.0	10632	2.4	81.1	40.0	—	**311 R3**	**BN180L4**	—	—	—	66700	83100	25200	374
18.2	10526	1.7	80.3	18.0	**310 L3**	—	**BN180L4**	—	—	—	56300	70800	25100	336
18.9	10132	2.5	77.3	18.0	**311 L3**	—	**BN180L4**	—	—	—	65800	81900	24800	348
19.8	9683	1.8	73.9	18.0	**310 L3**	—	**BN180L4**	—	—	—	54900	69000	24400	336
20.5	9320	2.7	71.1	18.0	**311 L3**	—	**BN180L4**	—	—	—	64100	79900	24100	348
20.9	9165	2.9	69.9	40.0	—	**313 R3**	**BN180L4**	—	—	—	78900	93300	29500	362
21.5	8911	2.7	68.0	40.0	—	**311 R3**	**BN180L4**	—	—	—	63300	78800	23700	374
22.8	8390	2.9	64.0	40.0	—	**313 R3**	**BN180L4**	—	—	—	76800	90900	28600	362
23.1	8285	2.9	63.2	40.0	—	**311 R3**	**BN180L4**	—	—	—	61900	77100	23100	374

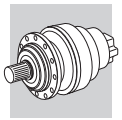

A

P_1 = 22 kW

n_2 min^{-1}	M_{n2} Nm	f_S	i	P_t kW					Rn_2 [N] MC	MZ	HC/PC	HZ/PZ	FZ	
23.3	8202	2.0	62.6	18.0	**310 L3**	—	**BN180L4**	—	—	—	52200	65700	23100	336
27.2	7032	2.9	53.7	40.0	—	**313 R3**	**BN180L4**	—	—	—	72800	86200	27000	362
27.4	6977	1.0	53.2	7.5	**306 L3**	—	**BN180L4**	—	15300	17300	37600	43800	11500	300
27.5	6948	2.3	53.0	18.0	**310 L3**	—	**BN180L4**	—	—	—	49700	62500	21800	336
27.6	6943	2.9	53.0	40.0	—	**311 R3**	**BN180L4**	—	—	—	58700	73100	21800	374
31	6325	1.3	46.7	18.0	**307 L2**	—	**BN180L4**	—	16700	20900	39700	52100	14500	312
31	6325	2.0	46.7	18.0	**309 L2**	—	**BN180L4**	—	—	—	40400	52100	11600	324
31	6325	2.2	46.7	22.0	**310 L2**	—	**BN180L4**	—	—	—	47800	60200	20900	336
31	6294	1.0	46.5	13.0	**306 L2**	—	**BN180L4**	—	15000	17000	36900	43000	11300	300
38	5229	1.6	38.6	18.0	**307 L2**	—	**BN180L4**	—	15600	19600	37500	49200	13600	312
38	5229	2.4	38.6	18.0	**309 L2**	—	**BN180L4**	—	—	—	38100	49200	10900	324
38	5229	2.6	38.6	22.0	**310 L2**	—	**BN180L4**	—	—	—	45200	56800	19600	336
38	5203	1.2	38.4	13.0	**306 L2**	—	**BN180L4**	—	14100	15900	34800	40600	10600	300
44	4476	1.5	33.1	13.0	**306 L2**	—	**BN180L4**	—	13400	15100	33300	38800	10000	300
45	4406	2.1	32.6	18.0	**307 L2**	—	**BN180L4**	—	14800	18500	35700	46700	12800	312
45	4406	3.0	32.6	18.0	**309 L2**	—	**BN180L4**	—	—	—	36200	46700	10300	324
48	4153	2.3	30.7	18.0	**307 L2**	—	**BN180L4**	—	14500	18200	35000	45900	12600	312
51	3850	1.7	28.4	22.0	**306 L2**	—	**BN180L4**	—	—	—	42200	53000	18200	300
52	3790	2.4	28.0	13.0	**307 L2**	—	**BN180L4**	—	12700	14400	31800	37100	9550	312
55	3567	1.8	26.4	13.0	**306 L2**	—	**BN180L4**	—	12400	14000	31100	36200	9310	300
58	3433	2.6	25.4	18.0	**307 L2**	—	**BN180L4**	—	13600	17100	33100	43400	11800	312
62	3186	2.9	23.5	35.0	—	**309 R2**	**BN180L4**	—	—	—	32900	42400	9220	326
62	3186	2.5	23.5	35.0	—	**307 R2**	**BN180L4**	—	13300	16600	32400	42400	11500	314
64	3068	2.0	22.7	13.0	**306 L2**	—	**BN180L4**	—	11800	13400	29700	34600	8850	300
67	2953	2.9	21.8	18.0	**307 L2**	—	**BN180L4**	—	12900	16200	31600	41400	11200	312
74	2685	2.9	19.8	35.0	—	**309 R2**	**BN180L4**	—	—	—	31200	40300	8710	326
74	2685	2.9	19.8	35.0	—	**307 R2**	**BN180L4**	—	12500	15700	30700	40300	10900	314
81	2445	2.4	18.1	13.0	**306 L2**	—	**BN180L4**	—	10900	12400	27800	32300	8210	300
94	2092	2.9	15.5	35.0	—	**309 R2**	**BN180L4**	—	—	—	29000	37400	8020	326
94	2092	2.9	15.5	35.0	—	**307 R2**	**BN180L4**	—	11500	14500	28500	37400	10000	314
95	2071	2.4	15.3	13.0	**306 L2**	—	**BN180L4**	—	10300	11700	26400	30800	7770	300
113	1754	2.7	13.0	13.0	**306 L2**	—	**BN180L4**	—	9780	11100	25100	29300	7350	300
113	1753	2.9	13.0	35.0	—	**309 R2**	**BN180L4**	—	—	—	27500	35400	7560	326
113	1753	2.9	13.0	35.0	—	**307 R2**	**BN180L4**	—	10900	13600	27000	35400	9450	314
195	1048	1.2	7.50	11.0	**303 L1**	—	**BN180L4**	—	6550	7560	13000	15700	4200	264
195	1048	2.2	7.50	13.0	**305 L1**	—	**BN180L4**	—	6550	7560	13000	15700	4200	288
222	918	2.0	6.57	12.0	**304 L1**	—	**BN180L4**	—	6260	7230	12500	15100	4020	288
235	866	1.6	6.20	11.0	**303 L1**	—	**BN180L4**	—	6140	7090	12300	14800	3940	264
274	745	2.0	5.33	11.0	**303 L1**	—	**BN180L4**	—	5840	6750	11800	14200	3750	264
274	745	2.7	5.33	12.0	**304 L1**	—	**BN180L4**	—	5840	6750	11800	14200	3750	288
344	594	2.4	4.25	11.0	**303 L1**	—	**BN180L4**	—	5420	6250	11000	13200	3480	264
406	503	2.7	3.60	11.0	**303 L1**	—	**BN180L4**	—	5010	5780	10300	12300	3210	264

P_1 = 30 kW

n_2 min^{-1}	M_{n2} Nm	f_S	i	P_t kW					Rn_2 [N] MC	MZ	HC/PC	HZ/PZ	FZ	
1.1	239514	1.5	1389	30.0	**319 L4**	—	**BN200L4**	—	—	—	636100	700800	199500	426
1.2	206034	1.7	1195	30.0	**319 L4**	—	**BN200L4**	—	—	—	608000	669900	189700	426
1.3	193443	2.7	1122	35.0	**321 L4**	—	**BN200L4**	—	—	—	731900	867900	1114500	436
1.4	182670	1.5	1059	22.0	**318 L4**	—	**BN200L4**	—	—	—	503000	520700	182200	416
1.4	178055	1.0	1032	18.0	**317 L4**	—	**BN200L4**	—	—	—	403600	429700	135500	406
1.5	173603	2.0	1007	30.0	**319 L4**	—	**BN200L4**	—	—	—	577600	636300	179200	426
1.6	157257	2.1	912	30.0	**319 L4**	—	**BN200L4**	—	—	—	560700	617700	173400	426
1.6	157135	1.7	911	22.0	**318 L4**	—	**BN200L4**	—	—	—	487700	497700	173300	416
1.6	156325	2.1	906	115.0	—	**319 R4 (C)**	**BN200L4**	—	—	—	559700	616600	173000	428
1.6	155863	1.1	904	18.0	**317 L4**	—	**BN200L4**	—	—	—	387800	412900	129600	406
1.7	146694	2.5	850	30.0	**319 L4**	—	**BN200L4**	—	—	—	549100	605000	169400	426
1.8	140136	0.9	812	18.0	**316 L4**	—	**BN200L4**	—	—	—	286100	318200	122300	396
1.8	138545	1.2	803	50.0	—	**317 R4**	**BN200L4**	—	—	—	374300	398500	124600	406
1.8	136603	1.4	792	18.0	**317 L4**	—	**BN200L4**	—	—	—	372700	396900	124100	406
1.9	134473	2.5	780	115.0	—	**319 R4 (C)**	**BN200L4**	—	—	—	535000	589400	164500	428

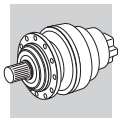

P_1 = 30 kW

n_2 min^{-1}	M_{n2} Nm	f_S	i	P_t kW					Rn_2 [N] MC	MZ	HC/PC	HZ/PZ	FZ	
1.9	132401	2.0	768	22.0	**318 L4**	—	**BN200L4**	—	—	—	463300	472800	163700	416
2.0	127807	1.0	741	18.0	**316 L4**	—	**BN200L4**	—	—	—	284200	316100	121400	396
2.0	125267	1.0	726	18.0	**316 L4**	—	**BN200L4**	—	—	—	282500	314100	120500	396
2.0	125217	2.1	726	22.0	**318 L4**	—	**BN200L4**	—	—	—	455600	464900	160700	416
2.0	124023	1.4	719	18.0	**317 L4**	—	**BN200L4**	—	—	—	362100	385500	120100	406
2.0	123603	2.9	717	30.0	**319 L4**	—	**BN200L4**	—	—	—	521600	574700	160000	426
2.1	119224	2.2	691	110.0	—	**318 R4 (C)**	**BN200L4**	—	—	—	448900	458100	158100	418
2.1	118078	1.1	685	18.0	**316 L4**	—	**BN200L4**	—	—	—	277500	308600	118200	396
2.2	116737	1.4	677	50.0	—	**317 R4**	**BN200L4**	—	—	—	355600	378600	117700	406
2.2	113306	2.8	657	115.0	—	**319 R4 (C)**	**BN200L4**	—	—	—	508200	559900	155400	428
2.2	112919	2.8	655	95.0	—	**319 R4 (B)**	**BN200L4**	—	—	—	507700	559300	155200	428
2.3	111560	2.4	647	22.0	**318 L4**	—	**BN200L4**	—	—	—	440100	449100	154600	416
2.3	107957	1.4	626	50.0	—	**317 R4**	**BN200L4**	—	—	—	347300	369800	114700	406
2.3	107690	1.2	624	18.0	**316 L4**	—	**BN200L4**	—	—	—	270000	300300	114600	396
2.3	107510	0.9	623	40.0	—	**315 R4**	**BN200L4**	—	—	—	162300	190500	68700	386
2.3	107510	1.1	623	45.0	—	**316 R4**	**BN200L4**	—	—	—	269800	300100	114500	386
2.4	106687	1.7	619	18.0	**317 L4**	—	**BN200L4**	—	—	—	346100	368500	114200	406
2.4	105507	2.5	612	22.0	**318 L4**	—	**BN200L4**	—	—	—	432800	441700	151800	416
2.5	102558	2.6	595	110.0	—	**318 R4 (C)**	**BN200L4**	—	—	—	429100	437900	150300	418
2.5	101910	1.0	591	18.0	**315 L4**	—	**BN200L4**	—	—	—	159700	187500	67500	384
2.5	101910	1.2	591	18.0	**316 L4**	—	**BN200L4**	—	—	—	265500	295300	112500	396
2.6	97611	1.3	566	18.0	**316 L4**	—	**BN200L4**	—	—	—	262100	291500	110900	396
2.6	95150	1.8	552	18.0	**317 L4**	—	**BN200L4**	—	—	—	334400	356100	110000	406
2.7	92009	1.1	533	18.0	**315 L4**	—	**BN200L4**	—	—	—	154900	181800	65200	384
2.7	92009	1.3	533	18.0	**316 L4**	—	**BN200L4**	—	—	—	257500	286400	108700	396
2.8	90587	1.1	525	40.0	—	**315 R4**	**BN200L4**	—	—	—	154100	181000	64900	386
2.8	90587	1.3	525	45.0	—	**316 R4**	**BN200L4**	—	—	—	256300	285000	108200	386
2.8	89687	1.8	520	50.0	—	**317 R4**	**BN200L4**	—	—	—	328500	349800	107800	406
2.8	88899	2.8	515	22.0	**318 L4**	—	**BN200L4**	—	—	—	411100	419500	143300	416
2.9	86415	2.9	501	110.0	—	**318 R4 (C)**	**BN200L4**	—	—	—	407600	416000	142000	418
2.9	86120	2.9	499	90.0	—	**318 R4 (B)**	**BN200L4**	—	—	—	407200	415600	141800	418
3.0	85299	0.9	495	15.0	**314 L4**	—	**BN200L4**	—	—	—	151400	177700	63600	372
3.0	85016	2.0	493	18.0	**317 L4**	—	**BN200L4**	—	—	—	323300	344200	105900	406
3.0	83966	1.2	487	18.0	**315 L4**	—	**BN200L4**	—	—	—	150700	176900	63300	384
3.0	83966	1.4	487	18.0	**316 L4**	—	**BN200L4**	—	—	—	250500	278600	105500	396
3.2	79018	1.0	458	15.0	**314 L4**	—	**BN200L4**	—	—	—	148000	173700	62000	372
3.3	77409	2.1	449	18.0	**317 L4**	—	**BN200L4**	—	—	—	314300	334700	102700	406
3.3	76328	1.5	443	45.0	—	**316 R4**	**BN200L4**	—	—	—	243500	270800	102200	386
3.3	76060	1.3	441	18.0	**315 L4**	—	**BN200L4**	—	—	—	146300	171700	61200	384
3.3	76060	1.5	441	18.0	**316 L4**	—	**BN200L4**	—	—	—	243200	270500	102100	396
3.3	75570	2.1	438	50.0	—	**317 R4**	**BN200L4**	—	—	—	312100	332300	101800	406
3.6	70587	1.4	409	40.0	—	**315 R4**	**BN200L4**	—	—	—	143000	167900	59700	386
3.6	70587	1.6	409	45.0	—	**316 R4**	**BN200L4**	—	—	—	237800	264500	99600	386
3.7	68808	2.2	399	50.0	—	**317 R4**	**BN200L4**	—	—	—	303400	323100	98700	406
3.8	66933	1.2	388	15.0	**314 L4**	—	**BN200L4**	—	—	—	140800	165300	58700	372
4.0	63746	1.5	370	18.0	**315 L4**	—	**BN200L4**	—	—	—	138700	162900	57700	384
4.0	63746	1.7	370	18.0	**316 L4**	—	**BN200L4**	—	—	—	230600	256500	96200	396
4.1	62139	2.5	360	18.0	**317 L4**	—	**BN200L4**	—	—	—	294300	313300	95400	406
4.2	59476	1.6	345	40.0	—	**315 R4**	**BN200L4**	—	—	—	135900	159500	56400	386
4.2	59476	1.8	345	45.0	—	**316 R4**	**BN200L4**	—	—	—	225900	251200	94000	386
4.3	57977	2.2	336	50.0	—	**317 R4**	**BN200L4**	—	—	—	288200	306900	93200	406
4.4	56677	1.9	329	18.0	**316 L4**	—	**BN200L4**	—	—	—	222700	247600	92500	396
4.6	54166	1.4	314	15.0	**314 L4**	—	**BN200L4**	—	—	—	132100	155100	54700	372
4.7	53453	2.7	310	18.0	**317 L4**	—	**BN200L4**	—	—	—	281300	299500	90700	406
4.8	52138	1.9	302	18.0	**315 L4**	—	**BN200L4**	—	—	—	130600	153300	54000	384
4.8	52138	2.0	302	18.0	**316 L4**	—	**BN200L4**	—	—	—	217100	241500	90000	396
5.1	49847	2.1	289	45.0	—	**316 R4**	**BN200L4**	—	—	—	214200	238300	88700	386
5.4	46345	1.8	269	40.0	—	**315 R4**	**BN200L4**	—	—	—	126100	148000	51900	386
5.4	46345	2.2	269	45.0	—	**316 R4**	**BN200L4**	—	—	—	209600	233100	86500	386
5.6	45177	2.2	262	50.0	—	**317 R4**	**BN200L4**	—	—	—	267500	284800	85800	406
5.7	44164	2.2	256	18.0	**316 L4**	—	**BN200L4**	—	—	—	206600	229800	85100	396
5.8	45008	1.0	252	18.0	**317 L3**	—	**BN200L4**	—	—	—	115900	137100	45200	406
5.8	45008	2.7	252	35.0	**313 L3**	—	**BN200L4**	—	—	—	264500	281600	84700	360
6.1	42931	1.5	241	30.0	**315 L3**	—	**BN200L4**	—	—	—	122000	143200	50000	384
6.1	42719	1.2	240	25.0	**314 L3**	—	**BN200L4**	—	—	—	121800	143000	50000	372

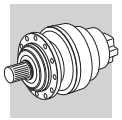

A

P_1 = 30 kW

n_2 min^{-1}	M_{n2} Nm	f_S	i	P_t kW					Rn_2 [N] MC	MZ	HC/PC	HZ/PZ	FZ	
6.5	38842	2.0	225	40.0	—	**315 R4**	**BN200L4**	—	—	—	119600	140400	48900	386
6.5	38842	2.4	225	45.0	—	**316 R4**	**BN200L4**	—	—	—	198800	221100	81600	386
6.7	37862	2.1	220	50.0	—	**317 R4**	**BN200L4**	—	—	—	253600	270100	80900	406
6.8	37014	2.5	215	18.0	**316 L4**	—	**BN200L4**	—	—	—	195900	217900	80300	396
7.0	37207	1.2	209	18.0	**313 L3**	—	**BN200L4**	—	—	—	109400	129500	42400	360
7.1	36930	2.2	207	30.0	**315 L3**	—	**BN200L4**	—	—	—	116600	136900	47600	384
7.1	36748	1.7	206	25.0	**314 L3**	—	**BN200L4**	—	—	—	116400	136700	47500	372
7.2	36173	0.9	203	18.0	**311 L3**	—	**BN200L4**	—	—	—	86000	107200	33400	348
7.5	34530	1.4	194	18.0	**313 L3**	—	**BN200L4**	—	—	—	107000	126700	41400	360
7.6	34097	0.9	191	18.0	**311 L3**	—	**BN200L4**	—	—	—	86300	107500	33500	348
8.0	32462	1.2	182	18.0	**313 L3**	—	**BN200L4**	—	—	—	105100	124300	40500	360
8.3	31350	1.4	176	18.0	**313 L3**	—	**BN200L4**	—	—	—	104000	123000	40100	360
8.4	31117	2.5	174	30.0	**315 L3**	—	**BN200L4**	—	—	—	110700	130000	45000	384
8.4	30963	2.0	174	25.0	**314 L3**	—	**BN200L4**	—	—	—	110600	129800	44900	372
8.5	30479	1.1	171	18.0	**311 L3**	—	**BN200L4**	—	—	—	83400	103900	32200	348
8.8	29429	2.7	165	30.0	**315 L3**	—	**BN200L4**	—	—	—	108900	127900	44100	384
8.8	29429	2.8	165	35.0	**316 L3**	—	**BN200L4**	—	—	—	181100	201400	73500	396
8.9	29283	2.2	164	25.0	**314 L3**	—	**BN200L4**	—	—	—	108700	127700	44100	372
9.0	29095	1.6	163	18.0	**313 L3**	—	**BN200L4**	—	—	—	101700	120300	39100	360
9.1	28730	1.1	161	18.0	**311 L3**	—	**BN200L4**	—	—	—	82000	102100	31600	348
9.3	28020	1.9	157	55.0	—	**314 R3 (C)**	**BN200L4**	—	—	—	107300	126000	43400	374
9.3	28020	2.3	157	90.0	—	**315 R3 (C)**	**BN200L4**	—	—	—	107300	126000	43400	386
9.5	27289	1.4	153	40.0	—	**313 R3**	**BN200L4**	—	—	—	99700	118000	38200	362
9.7	26968	1.7	151	18.0	**313 L3**	—	**BN200L4**	—	—	—	99400	117600	38100	360
9.9	26219	1.2	147	18.0	**311 L3**	—	**BN200L4**	—	—	—	79700	99300	30700	348
10.0	26159	1.0	147	40.0	—	**311 R3**	**BN200L4**	—	—	—	79700	99300	30600	374
10.2	25505	1.7	143	18.0	**313 L3**	—	**BN200L4**	—	—	—	97700	115700	37400	360
10.6	24674	2.6	138	25.0	**314 L3**	—	**BN200L4**	—	—	—	103300	121300	41600	372
10.8	24103	2.5	135	55.0	—	**314 R3 (C)**	**BN200L4**	—	—	—	102600	120400	41300	374
10.8	24052	1.8	135	18.0	**313 L3**	—	**BN200L4**	—	—	—	96000	113600	36700	360
11.0	23750	1.3	133	18.0	**311 L3**	—	**BN200L4**	—	—	—	77400	96400	29700	348
11.5	22671	1.8	127	40.0	—	**313 R3**	**BN200L4**	—	—	—	94300	111600	36000	362
11.6	22387	1.3	126	18.0	**311 L3**	—	**BN200L4**	—	—	—	76100	94700	29100	348
11.8	22041	1.4	124	40.0	—	**311 R3**	**BN200L4**	—	—	—	75700	94300	28900	374
12.1	21490	2.0	120	18.0	**313 L3**	—	**BN200L4**	—	—	—	92800	109900	35300	360
12.3	21225	0.9	119	18.0	**310 L3**	—	**BN200L4**	—	—	—	63300	79600	28600	336
12.7	20430	1.4	115	18.0	**311 L3**	—	**BN200L4**	—	—	—	74000	92200	28200	348
12.8	20309	2.5	114	55.0	—	**314 R3 (C)**	**BN200L4**	—	—	—	97400	114400	39000	374
12.9	20240	2.4	113	55.0	—	**314 R3 (B)**	**BN200L4**	—	—	—	97300	114300	38900	374
12.9	20240	3.0	113	75.0	—	**315 R3 (B)**	**BN200L4**	—	—	—	97300	114300	38900	386
13.2	19701	1.0	110	18.0	**310 L3**	—	**BN200L4**	—	—	—	60700	76300	27200	336
13.3	19567	2.1	110	18.0	**313 L3**	—	**BN200L4**	—	—	—	90300	106800	34200	360
13.5	19226	3.0	108	25.0	**314 L3**	—	**BN200L4**	—	—	—	95900	112500	38300	372
13.6	19207	2.6	108	55.0	—	**314 R3 (C)**	**BN200L4**	—	—	—	95800	112500	38300	374
13.6	19102	2.0	107	40.0	—	**313 R3**	**BN200L4**	—	—	—	89600	106000	34000	362
14.0	18572	1.5	104	40.0	—	**311 R3**	**BN200L4**	—	—	—	71900	89600	27300	374
14.1	18507	1.5	104	18.0	**311 L3**	—	**BN200L4**	—	—	—	71800	89500	27300	348
14.5	17979	1.0	101	18.0	**310 L3**	—	**BN200L4**	—	—	—	60300	75800	27000	336
15.0	17393	2.1	97.5	40.0	—	**313 R3**	**BN200L4**	—	—	—	87100	103100	32900	362
15.2	17175	1.6	96.3	40.0	—	**311 R3**	**BN200L4**	—	—	—	70200	87500	26600	374
15.8	16487	2.4	92.4	18.0	**313 L3**	—	**BN200L4**	—	—	—	85700	101500	32300	360
16.0	16286	1.1	91.3	18.0	**310 L3**	—	**BN200L4**	—	—	—	58500	73600	26200	336
16.1	16184	2.9	90.7	55.0	—	**314 R3 (C)**	**BN200L4**	—	—	—	91000	106900	36200	374
16.4	15920	1.7	89.3	18.0	**311 L3**	—	**BN200L4**	—	—	—	68100	84900	25700	348
17.8	14655	2.1	82.2	40.0	—	**313 R3**	**BN200L4**	—	—	—	82800	97900	31100	362
18.0	14471	1.8	81.1	40.0	—	**311 R3**	**BN200L4**	—	—	—	66700	83100	25200	374
18.2	14327	1.2	80.3	18.0	**310 L3**	—	**BN200L4**	—	—	—	56300	70800	25100	336
18.6	13966	2.7	78.3	18.0	**313 L3**	—	**BN200L4**	—	—	—	81600	96500	30600	360
18.9	13790	1.8	77.3	18.0	**311 L3**	—	**BN200L4**	—	—	—	65800	81900	24800	348
19.8	13179	1.3	73.9	18.0	**310 L3**	—	**BN200L4**	—	—	—	54900	69000	24400	336
20.3	12847	2.8	72.0	18.0	**313 L3**	—	**BN200L4**	—	—	—	79600	94100	29800	360
20.5	12686	2.0	71.1	18.0	**311 L3**	—	**BN200L4**	—	—	—	64100	79900	24100	348
20.9	12475	2.1	69.9	40.0	—	**313 R3**	**BN200L4**	—	—	—	78900	93300	29500	362
21.5	12128	2.0	68.0	40.0	—	**311 R3**	**BN200L4**	—	—	—	63300	78800	23700	374
22.8	11420	2.1	64.0	40.0	—	**313 R3**	**BN200L4**	—	—	—	76800	90900	28600	362

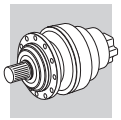

P_1 = 30 kW

n_2 min^{-1}	M_{n2} Nm	f_S	i	P_t kW					Rn_2 [N]					
									MC	MZ	HC/PC	HZ/PZ	FZ	
23.1	11276	2.1	63.2	40.0	—	**311 R3**	**BN200L4**	—	—	—	61900	77100	23100	374
23.3	11164	1.5	62.6	18.0	**310 L3**	—	**BN200L4**	—	—	—	52200	65700	23100	336
24.2	10746	2.2	60.2	18.0	**311 L3**	—	**BN200L4**	—	—	—	61000	76000	22800	348
27.2	9571	2.1	53.7	40.0	—	**313 R3**	**BN200L4**	—	—	—	72800	86200	27000	362
27.5	9456	1.7	53.0	18.0	**310 L3**	—	**BN200L4**	—	—	—	49700	62500	21800	336
27.6	9451	2.1	53.0	40.0	—	**311 R3**	**BN200L4**	—	—	—	58700	73100	21800	374
28.9	9006	2.5	50.5	18.0	**311 L3**	—	**BN200L4**	—	—	—	57900	72100	21500	348
31	8610	1.0	46.7	18.0	**307 L2**	—	**BN200L4**	—	16700	20900	39700	52100	14500	312
31	8610	1.5	46.7	18.0	**309 L2**	—	**BN200L4**	—	—	—	40400	52100	11600	324
31	8610	1.6	46.7	22.0	**310 L2**	—	**BN200L4**	—	—	—	47800	60200	20900	336
38	7153	2.8	38.8	26.0	**311 L2**	—	**BN200L4**	—	—	—	53500	66600	19700	348
38	7117	1.2	38.6	18.0	**307 L2**	—	**BN200L4**	—	15600	19600	37500	49200	13600	312
38	7117	1.8	38.6	18.0	**309 L2**	—	**BN200L4**	—	—	—	38100	49200	10900	324
38	7117	1.9	38.6	22.0	**310 L2**	—	**BN200L4**	—	—	—	45200	56800	19600	336
38	7082	0.9	38.4	13.0	**306 L2**	—	**BN200L4**	—	13700	15600	34100	39700	10300	300
44	6092	1.1	33.1	13.0	**306 L2**	—	**BN200L4**	—	13400	15100	33300	38800	10000	300
45	5997	1.6	32.6	18.0	**307 L2**	—	**BN200L4**	—	14800	18500	35700	46700	12800	312
45	5997	2.2	32.6	18.0	**309 L2**	—	**BN200L4**	—	—	—	36200	46700	10300	324
45	5997	2.2	32.6	22.0	**310 L2**	—	**BN200L4**	—	—	—	42900	54000	18600	336
48	5653	2.4	30.7	22.0	**310 L2**	—	**BN200L4**	—	—	—	42200	53000	18200	336
48	5653	1.7	30.7	18.0	**307 L2**	—	**BN200L4**	—	14500	18200	35000	45900	12600	312
51	5241	1.3	28.4	13.0	**306 L2**	—	**BN200L4**	—	12700	14400	31800	37100	9550	300
52	5159	1.8	28.0	18.0	**307 L2**	—	**BN200L4**	—	14100	17600	34100	44700	12200	312
52	5159	2.4	28.0	18.0	**309 L2**	—	**BN200L4**	—	—	—	34600	44700	9770	324
52	5159	2.5	28.0	22.0	**310 L2**	—	**BN200L4**	—	—	—	41000	51600	17600	336
55	4855	1.3	26.4	13.0	**306 L2**	—	**BN200L4**	—	12400	14000	31100	36200	9310	300
58	4673	2.7	25.4	22.0	**310 L2**	—	**BN200L4**	—	—	—	39800	50100	17100	336
58	4673	1.9	25.4	18.0	**307 L2**	—	**BN200L4**	—	13600	17100	33100	43400	11800	312
58	4673	2.2	25.4	18.0	**309 L2**	—	**BN200L4**	—	—	—	33600	43400	9460	324
58	4668	2.6	25.3	55.0	—	**310 R2 (C)**	**BN200L4**	—	—	—	39800	50100	17100	338
62	4337	2.1	23.5	35.0	—	**309 R2**	**BN200L4**	—	—	—	32900	42400	9220	326
62	4337	1.8	23.5	35.0	—	**307 R2**	**BN200L4**	—	13300	16600	32400	42400	11500	314
64	4176	1.5	22.7	13.0	**306 L2**	—	**BN200L4**	—	11800	13400	29700	34600	8850	300
67	4020	2.2	21.8	18.0	**307 L2**	—	**BN200L4**	—	12900	16200	31600	41400	11200	312
67	4020	2.5	21.8	18.0	**309 L2**	—	**BN200L4**	—	—	—	32100	41400	8990	324
68	3934	3.0	21.3	55.0	—	**310 R2 (C)**	**BN200L4**	—	—	—	37800	47600	16100	338
74	3654	2.1	19.8	35.0	—	**309 R2**	**BN200L4**	—	—	—	31200	40300	8710	326
74	3654	2.1	19.8	35.0	—	**307 R2**	**BN200L4**	—	12500	15700	30700	40300	10900	314
81	3328	1.8	18.1	13.0	**306 L2**	—	**BN200L4**	—	10900	12400	27800	32300	8210	300
84	3203	2.5	17.4	18.0	**307 L2**	—	**BN200L4**	—	12000	15000	29500	38700	10400	312
94	2847	2.1	15.5	35.0	—	**309 R2**	**BN200L4**	—	—	—	29000	37400	8020	326
94	2847	2.1	15.5	35.0	—	**307 R2**	**BN200L4**	—	11500	14500	28500	37400	10000	314
95	2819	1.8	15.3	13.0	**306 L2**	—	**BN200L4**	—	10300	11700	26400	30800	7770	300
99	2713	2.8	14.7	18.0	**307 L2**	—	**BN200L4**	—	11300	14200	28100	36800	9860	312
113	2388	2.0	13.0	13.0	**306 L2**	—	**BN200L4**	—	9780	11100	25100	29300	7350	300
113	2386	2.1	13.0	35.0	—	**309 R2**	**BN200L4**	—	—	—	27500	35400	7560	326
113	2386	2.1	13.0	35.0	—	**307 R2**	**BN200L4**	—	10900	13600	27000	35400	9450	314
195	1426	1.6	7.50	13.0	**305 L1**	—	**BN200L4**	—	6550	7560	13000	15700	4200	288
195	1426	2.9	7.50	18.0	**306 L1**	—	**BN200L4**	—	8150	9240	21300	24800	6120	300
222	1249	1.5	6.57	12.0	**304 L1**	—	**BN200L4**	—	6260	7230	12500	15100	4020	288
235	1179	1.2	6.20	11.0	**303 L1**	—	**BN200L4**	—	6140	7090	12300	14800	3940	264
235	1179	2.2	6.20	13.0	**305 L1**	—	**BN200L4**	—	6140	7090	12300	14800	3940	288
274	1014	1.5	5.33	11.0	**303 L1**	—	**BN200L4**	—	5840	6750	11800	14200	3750	264
274	1014	2.0	5.33	12.0	**304 L1**	—	**BN200L4**	—	5840	6750	11800	14200	3750	288
274	1014	2.5	5.33	13.0	**305 L1**	—	**BN200L4**	—	5840	6750	11800	14200	3750	288
344	808	1.8	4.25	11.0	**303 L1**	—	**BN200L4**	—	5420	6250	11000	13200	3480	264
344	808	2.4	4.25	12.0	**304 L1**	—	**BN200L4**	—	5420	6250	11000	13200	3480	288
406	684	2.0	3.60	13.0	**303 L1**	—	**BN200L4**	—	5420	6250	11000	13200	3480	264
406	684	2.7	3.60	18.0	**304 L1**	—	**BN200L4**	—	6750	7640	18000	21000	5070	288

A

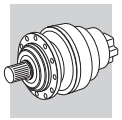

A

P_1 = 37 kW

n_2 min^{-1}	M_{n2} Nm	f_S	i	P_t kW					Rn_2 [N] MC	MZ	HC/PC	HZ/PZ	FZ	
1.1	292061	1.2	1389	30.0	**319 L4**	—	**BN225S4**	—	—	—	636100	700800	199500	426
1.2	251235	1.4	1195	30.0	**319 L4**	—	**BN225S4**	—	—	—	608000	669900	189700	426
1.3	235882	2.2	1122	35.0	**321 L4**	—	**BN225S4**	—	—	—	731900	867900	1114500	436
1.4	222745	1.2	1059	22.0	**318 L4**	—	**BN225S4**	—	—	—	503000	520700	182200	416
1.5	211689	1.6	1007	30.0	**319 L4**	—	**BN225S4**	—	—	—	577600	636300	179200	426
1.6	198752	2.9	945	35.0	**321 L4**	—	**BN225S4**	—	—	—	695300	824500	1052600	436
1.6	191757	1.8	912	30.0	**319 L4**	—	**BN225S4**	—	—	—	560700	617700	173400	426
1.6	191609	1.4	911	22.0	**318 L4**	—	**BN225S4**	—	—	—	487700	497700	173300	416
1.6	190621	1.8	906	115.0	—	**319 R4 (C)**	**BN225S4**	—	—	—	559700	616600	173000	428
1.7	178877	2.0	850	30.0	**319 L4**	—	**BN225S4**	—	—	—	549100	605000	169400	426
1.9	163975	2.0	780	115.0	—	**319 R4 (C)**	**BN225S4**	—	—	—	535000	589400	164500	428
1.9	161448	1.7	768	22.0	**318 L4**	—	**BN225S4**	—	—	—	463300	472800	163700	416
2.0	152688	1.7	726	22.0	**318 L4**	—	**BN225S4**	—	—	—	455600	464900	160700	416
2.1	150721	2.4	717	30.0	**319 L4**	—	**BN225S4**	—	—	—	521600	574700	160000	426
2.1	145380	1.8	691	110.0	—	**318 R4 (C)**	**BN225S4**	—	—	—	448900	458100	158100	418
2.2	142543	2.5	678	30.0	**319 L4**	—	**BN225S4**	—	—	—	513000	565100	157000	426
2.3	138164	2.3	657	115.0	—	**319 R4 (C)**	**BN225S4**	—	—	—	508200	559900	155400	428
2.3	137692	2.3	655	95.0	—	**319 R4 (B)**	**BN225S4**	—	—	—	507700	559300	155200	428
2.3	136035	1.9	647	22.0	**318 L4**	—	**BN225S4**	—	—	—	440100	449100	154600	416
2.4	128654	2.0	612	22.0	**318 L4**	—	**BN225S4**	—	—	—	432800	441700	151800	416
2.5	125058	2.1	595	110.0	—	**318 R4 (C)**	**BN225S4**	—	—	—	429100	437900	150300	418
2.6	120105	2.9	571	30.0	**319 L4**	—	**BN225S4**	—	—	—	487300	536800	148300	426
2.6	118445	2.6	563	95.0	—	**319 R4 (B)**	**BN225S4**	—	—	—	485200	534600	147600	428
2.7	116749	2.6	555	115.0	—	**319 R4 (C)**	**BN225S4**	—	—	—	483100	532300	146900	428
2.8	110414	2.7	525	115.0	—	**319 R4 (C)**	**BN225S4**	—	—	—	475100	523500	144200	428
2.9	108403	2.3	515	22.0	**318 L4**	—	**BN225S4**	—	—	—	411100	419500	143300	416
3.0	105373	2.4	501	110.0	—	**318 R4 (C)**	**BN225S4**	—	—	—	407600	416000	142000	418
3.0	105013	2.4	499	90.0	—	**318 R4 (B)**	**BN225S4**	—	—	—	407200	415600	141800	418
3.1	100250	2.5	477	22.0	**318 L4**	—	**BN225S4**	—	—	—	401600	409800	139700	416
3.1	99656	2.5	474	110.0	—	**318 R4 (C)**	**BN225S4**	—	—	—	400900	409100	139400	418
3.4	90334	2.7	430	90.0	—	**318 R4 (B)**	**BN225S4**	—	—	—	389200	397200	134900	418
3.5	88839	2.7	422	22.0	**318 L4**	—	**BN225S4**	—	—	—	387300	395200	134100	416
3.7	84470	2.8	402	22.0	**318 L4**	—	**BN225S4**	—	—	—	381500	389300	131900	416
3.7	83969	2.8	399	110.0	—	**318 R4 (C)**	**BN225S4**	—	—	—	380800	388600	131600	418
5.9	54883	2.2	252	35.0	**317 L3**	—	**BN225S4**	—	—	—	264500	281600	84700	406
6.1	52350	1.2	241	30.0	**315 L3**	—	**BN225S4**	—	—	—	122000	143200	50000	384
6.2	52091	1.0	240	25.0	**314 L3**	—	**BN225S4**	—	—	—	121800	143000	50000	372
7.1	45032	1.8	207	30.0	**315 L3**	—	**BN225S4**	—	—	—	116600	136900	47600	384
7.2	44810	1.4	206	25.0	**314 L3**	—	**BN225S4**	—	—	—	116400	136700	47500	372
8.5	37944	2.1	174	30.0	**315 L3**	—	**BN225S4**	—	—	—	110700	130000	45000	384
8.5	37756	1.7	174	25.0	**314 L3**	—	**BN225S4**	—	—	—	110600	129800	44900	372
9.0	35885	2.2	165	30.0	**315 L3**	—	**BN225S4**	—	—	—	108900	127900	44100	384
9.0	35885	2.3	165	35.0	**316 L3**	—	**BN225S4**	—	—	—	181100	201400	73500	396
9.0	35708	1.8	164	25.0	**314 L3**	—	**BN225S4**	—	—	—	108700	127700	44100	372
9.4	34167	1.5	157	55.0	—	**314 R3 (C)**	**BN225S4**	—	—	—	107300	126000	43400	374
9.4	34167	1.9	157	90.0	—	**315 R3 (C)**	**BN225S4**	—	—	—	107300	126000	43400	386
10.6	30236	2.7	139	30.0	**315 L3**	—	**BN225S4**	—	—	—	103500	121500	41700	384
10.6	30236	2.7	139	35.0	**316 L3**	—	**BN225S4**	—	—	—	172000	191300	69500	396
10.7	30087	2.2	138	25.0	**314 L3**	—	**BN225S4**	—	—	—	103300	121300	41600	372
11.0	29391	2.1	135	55.0	—	**314 R3 (C)**	**BN225S4**	—	—	—	102600	120400	41300	374
11.0	29391	2.6	135	90.0	—	**315 R3 (C)**	**BN225S4**	—	—	—	102600	120400	41300	386
13.0	24765	2.1	114	55.0	—	**314 R3 (C)**	**BN225S4**	—	—	—	97400	114400	39000	374
13.0	24765	2.6	114	90.0	—	**315 R3 (C)**	**BN225S4**	—	—	—	97400	114400	39000	386
13.0	24680	1.9	113	55.0	—	**314 R3 (B)**	**BN225S4**	—	—	—	97300	114300	38900	374
13.0	24680	2.4	113	75.0	—	**315 R3 (B)**	**BN225S4**	—	—	—	97300	114300	38900	386
13.7	23444	2.4	108	25.0	**314 L3**	—	**BN225S4**	—	—	—	95900	112500	38300	372
13.7	23421	2.1	108	55.0	—	**314 R3 (C)**	**BN225S4**	—	—	—	95800	112500	38300	374
13.7	23421	2.7	108	90.0	—	**315 R3 (C)**	**BN225S4**	—	—	—	95800	112500	38300	386
15.2	21230	2.6	97.6	55.0	—	**314 R3 (B)**	**BN225S4**	—	—	—	93000	109200	37000	374
16.0	20167	2.7	92.7	25.0	**314 L3**	—	**BN225S4**	—	—	—	91600	107600	36400	372
16.3	19734	2.4	90.7	55.0	—	**314 R3 (C)**	**BN225S4**	—	—	—	91000	106900	36200	374
16.3	19734	3.0	90.7	90.0	—	**315 R3 (C)**	**BN225S4**	—	—	—	91000	106900	36200	386
18.0	17889	2.9	82.3	55.0	—	**314 R3 (B)**	**BN225S4**	—	—	—	88400	103800	35000	374
20.9	15378	2.9	70.7	55.0	—	**314 R3 (C)**	**BN225S4**	—	—	—	84500	99200	33300	374
32	10499	1.4	46.7	22.0	**310 L2**	—	**BN225S4**	—	—	—	47800	60200	20900	336

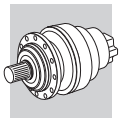

P_1 = 37 kW

n_2 min^{-1}	M_{n2} Nm	f_S	i	P_t kW					Rn_2 [N] MC	MZ	HC/PC	HZ/PZ	FZ	
38	8722	2.3	38.8	26.0	**311 L2**	**—**	**BN225S4**	**—**	—	—	53500	66600	19700	348
38	8679	1.6	38.6	22.0	**310 L2**	**—**	**BN225S4**	**—**	—	—	45200	56800	19600	336
45	7349	2.7	32.7	26.0	**311 L2**	**—**	**BN225S4**	**—**	—	—	50800	63300	18600	348
45	7313	1.8	32.6	22.0	**310 L2**	**—**	**BN225S4**	**—**	—	—	42900	54000	18600	336
48	6893	1.9	30.7	22.0	**310 L2**	**—**	**BN225S4**	**—**	—	—	42200	53000	18200	336
53	6290	2.0	28.0	22.0	**310 L2**	**—**	**BN225S4**	**—**	—	—	41000	51600	17600	336
58	5698	2.2	25.4	22.0	**310 L2**	**—**	**BN225S4**	**—**	—	—	39800	50100	17100	336
58	5693	2.1	25.3	55.0	**—**	**310 R2 (C)**	**BN225S4**	**—**	—	—	39800	50100	17100	338
68	4902	2.5	21.8	22.0	**310 L2**	**—**	**BN225S4**	**—**	—	—	38100	47900	16200	336
69	4796	2.5	21.3	55.0	**—**	**310 R2 (C)**	**BN225S4**	**—**	—	—	37800	47600	16100	338
81	4112	2.7	18.3	55.0	**—**	**310 R2 (B)**	**BN225S4**	**—**	—	—	36100	45400	15300	338
85	3906	2.9	17.4	22.0	**310 L2**	**—**	**BN225S4**	**—**	—	—	35600	44700	15100	336
89	3738	3.0	16.6	55.0	**—**	**310 R2 (C)**	**BN225S4**	**—**	—	—	35100	44100	14800	338
197	1739	2.4	7.50	18.0	**306 L1**	**—**	**BN225S4**	**—**	8150	9240	21300	24800	6120	300
239	1437	2.9	6.20	18.0	**306 L1**	**—**	**BN225S4**	**—**	7650	8670	20200	23500	5750	300

P_1 = 45 kW

n_2 min^{-1}	M_{n2} Nm	f_S	i	P_t kW					Rn_2 [N] MC	MZ	HC/PC	HZ/PZ	FZ	
1.1	355606	1.0	1389	30.0	**319 L4**	**—**	**BN225M4**	**—**	—	—	636100	700800	199500	426
1.2	327642	2.7	1279	50.0	**323 L4**	**—**	**BN225M4**	**—**	—	—	—	—	1043200	446
1.2	305897	1.2	1195	30.0	**319 L4**	**—**	**BN225M4**	**—**	—	—	608000	669900	189700	426
1.3	287204	1.8	1122	35.0	**321 L4**	**—**	**BN225M4**	**—**	—	—	731900	867900	1114500	436
1.4	271209	1.0	1059	22.0	**318 L4**	**—**	**BN225M4**	**—**	—	—	499800	510000	178100	416
1.5	257747	1.3	1007	30.0	**319 L4**	**—**	**BN225M4**	**—**	—	—	577600	636300	179200	426
1.6	241996	2.4	945	35.0	**321 L4**	**—**	**BN225M4**	**—**	—	—	695300	824500	1052600	436
1.6	233478	1.4	912	30.0	**319 L4**	**—**	**BN225M4**	**—**	—	—	560700	617700	173400	426
1.6	233298	1.2	911	22.0	**318 L4**	**—**	**BN225M4**	**—**	—	—	487700	497700	173300	416
1.6	232095	1.4	906	115.0	**—**	**319 R4 (C)**	**BN225M4**	**—**	—	—	559700	616600	173000	428
1.7	217796	1.7	850	30.0	**319 L4**	**—**	**BN225M4**	**—**	—	—	549100	605000	169400	426
1.9	203904	2.7	796	35.0	**321 L4**	**—**	**BN225M4**	**—**	—	—	660400	783200	994200	436
1.9	199651	1.7	780	115.0	**—**	**319 R4 (C)**	**BN225M4**	**—**	—	—	535000	589400	164500	428
1.9	196575	1.4	768	22.0	**318 L4**	**—**	**BN225M4**	**—**	—	—	463300	472800	163700	416
2.0	188568	2.9	736	35.0	**321 L4**	**—**	**BN225M4**	**—**	—	—	645100	765000	968700	436
2.0	187451	2.8	732	125.0	**—**	**321 R4 (C)**	**BN225M4**	**—**	—	—	644000	763700	966700	438
2.0	185909	1.4	726	22.0	**318 L4**	**—**	**BN225M4**	**—**	—	—	455600	464900	160700	416
2.1	183513	1.9	717	30.0	**319 L4**	**—**	**BN225M4**	**—**	—	—	521600	574700	160000	426
2.1	177011	1.5	691	110.0	**—**	**318 R4 (C)**	**BN225M4**	**—**	—	—	448900	458100	158100	418
2.2	173556	2.0	678	30.0	**319 L4**	**—**	**BN225M4**	**—**	—	—	513000	565100	157000	426
2.3	168225	1.9	657	115.0	**—**	**319 R4 (C)**	**BN225M4**	**—**	—	—	508200	559900	155400	428
2.3	167650	1.9	655	95.0	**—**	**319 R4 (B)**	**BN225M4**	**—**	—	—	507700	559300	155200	428
2.3	165633	1.6	647	22.0	**318 L4**	**—**	**BN225M4**	**—**	—	—	440100	449100	154600	416
2.4	156646	1.7	612	22.0	**318 L4**	**—**	**BN225M4**	**—**	—	—	432800	441700	151800	416
2.5	152268	1.7	595	110.0	**—**	**318 R4 (C)**	**BN225M4**	**—**	—	—	429100	437900	150300	418
2.6	146237	2.4	571	30.0	**319 L4**	**—**	**BN225M4**	**—**	—	—	487300	536800	148300	426
2.6	144215	2.2	563	95.0	**—**	**319 R4 (B)**	**BN225M4**	**—**	—	—	485200	534600	147600	428
2.7	142150	2.2	555	115.0	**—**	**319 R4 (C)**	**BN225M4**	**—**	—	—	483100	532300	146900	428
2.8	135239	2.5	528	30.0	**319 L4**	**—**	**BN225M4**	**—**	—	—	476000	524400	144500	426
2.8	134437	2.2	525	115.0	**—**	**319 R4 (C)**	**BN225M4**	**—**	—	—	475100	523500	144200	428
2.9	131988	1.9	515	22.0	**318 L4**	**—**	**BN225M4**	**—**	—	—	411100	419500	143300	416
3.0	128299	2.0	501	110.0	**—**	**318 R4 (C)**	**BN225M4**	**—**	—	—	407600	416000	142000	418
3.0	127861	2.0	499	90.0	**—**	**318 R4 (B)**	**BN225M4**	**—**	—	—	407200	415600	141800	418
3.1	122062	2.0	477	22.0	**318 L4**	**—**	**BN225M4**	**—**	—	—	401600	409800	139700	416
3.1	121515	2.5	475	95.0	**—**	**319 R4 (B)**	**BN225M4**	**—**	—	—	460900	507800	139400	428
3.1	121338	2.0	474	110.0	**—**	**318 R4 (C)**	**BN225M4**	**—**	—	—	400900	409100	139400	418
3.3	113951	2.8	445	30.0	**319 L4**	**—**	**BN225M4**	**—**	—	—	452100	498100	136500	426
3.3	113276	2.5	442	115.0	**—**	**319 R4 (C)**	**BN225M4**	**—**	—	—	451300	497200	136200	428
3.4	109988	2.2	430	90.0	**—**	**318 R4 (B)**	**BN225M4**	**—**	—	—	389200	397200	134900	418
3.5	108168	2.2	422	22.0	**318 L4**	**—**	**BN225M4**	**—**	—	—	387300	395200	134100	416
3.7	102848	2.3	402	22.0	**318 L4**	**—**	**BN225M4**	**—**	—	—	381500	389300	131900	416
3.7	102239	2.3	399	110.0	**—**	**318 R4 (C)**	**BN225M4**	**—**	—	—	380800	388600	131600	418

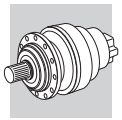

P_1 = 45 kW

n_2 min^{-1}	M_{n2} Nm	f_S	i	P_t kW					Rn_2 [N] MC	MZ	HC/PC	HZ/PZ	FZ	
4.1	92675	2.5	362	90.0	—	**318 R4 (B)**	**BN225M4**	—	—	—	369700	377300	127400	418
4.3	88267	2.9	345	115.0	—	**319 R4 (C)**	**BN225M4**	—	—	—	418800	461400	125400	428
4.3	87647	2.6	342	90.0	—	**318 R4 (B)**	**BN225M4**	—	—	—	363600	371000	125100	418
4.4	86197	2.6	337	22.0	**318 L4**	—	**BN225M4**	—	—	—	361800	369200	124400	416
4.7	80141	2.8	313	22.0	**318 L4**	—	**BN225M4**	—	—	—	353900	361200	121400	416
4.8	79666	2.8	311	110.0	—	**318 R4 (C)**	**BN225M4**	—	—	—	353300	360600	121100	418
5.1	73851	2.9	288	90.0	—	**318 R4 (B)**	**BN225M4**	—	—	—	345400	352500	118100	418
5.9	66824	1.8	252	35.0	**317 L3**	—	**BN225M4**	—	—	—	264500	281600	84700	406
6.1	63740	1.0	241	30.0	**315 L3**	—	**BN225M4**	—	—	—	122000	143200	50000	384
7.0	56305	2.5	213	35.0	**317 L3**	—	**BN225M4**	—	—	—	251200	267500	80000	406
7.1	54830	1.5	207	30.0	**315 L3**	—	**BN225M4**	—	—	—	116600	136900	47600	384
7.2	54559	1.2	206	25.0	**314 L3**	—	**BN225M4**	—	—	—	116400	136700	47500	372
8.3	47442	2.9	179	35.0	**317 L3**	—	**BN225M4**	—	—	—	238700	254100	75600	406
8.5	46199	1.7	174	30.0	**315 L3**	—	**BN225M4**	—	—	—	110700	130000	45000	384
8.5	45971	1.4	174	25.0	**314 L3**	—	**BN225M4**	—	—	—	110600	129800	44900	372
8.9	43874	2.7	166	35.0	**317 L3**	—	**BN225M4**	—	—	—	233100	248200	73600	406
9.0	43692	1.8	165	30.0	**315 L3**	—	**BN225M4**	—	—	—	108900	127900	44100	384
9.0	43692	1.9	165	35.0	**316 L3**	—	**BN225M4**	—	—	—	181100	201400	73500	396
9.0	43614	2.7	165	100.0	—	**317 R3 (C)**	**BN225M4**	—	—	—	232700	247800	73500	406
9.0	43477	1.5	164	25.0	**314 L3**	—	**BN225M4**	—	—	—	108700	127700	44100	372
9.4	41601	1.2	157	55.0	—	**314 R3 (C)**	**BN225M4**	—	—	—	107300	126000	43400	374
9.4	41601	1.6	157	90.0	—	**315 R3 (C)**	**BN225M4**	—	—	—	107300	126000	43400	386
10.6	36815	2.2	139	30.0	**315 L3**	—	**BN225M4**	—	—	—	103500	121500	41700	384
10.6	36815	2.2	139	35.0	**316 L3**	—	**BN225M4**	—	—	—	172000	191300	69500	396
10.7	36633	1.8	138	25.0	**314 L3**	—	**BN225M4**	—	—	—	103300	121300	41600	372
11.0	35786	1.7	135	55.0	—	**314 R3 (C)**	**BN225M4**	—	—	—	102600	120400	41300	374
11.0	35786	2.1	135	90.0	—	**315 R3 (C)**	**BN225M4**	—	—	—	102600	120400	41300	386
12.6	31020	2.6	117	35.0	**316 L3**	—	**BN225M4**	—	—	—	163400	181700	65600	396
13.0	30153	1.7	114	55.0	—	**314 R3 (C)**	**BN225M4**	—	—	—	97400	114400	39000	374
13.0	30153	2.1	114	90.0	—	**315 R3 (C)**	**BN225M4**	—	—	—	97400	114400	39000	386
13.0	30050	1.6	113	55.0	—	**314 R3 (B)**	**BN225M4**	—	—	—	97300	114300	38900	374
13.0	30050	2.0	113	75.0	—	**315 R3 (B)**	**BN225M4**	—	—	—	97300	114300	38900	386
13.7	28687	2.5	108	30.0	**315 L3**	—	**BN225M4**	—	—	—	96000	112700	38400	384
13.7	28687	2.6	108	35.0	**316 L3**	—	**BN225M4**	—	—	—	159600	177500	63900	396
13.7	28545	2.0	108	25.0	**314 L3**	—	**BN225M4**	—	—	—	95900	112500	38300	372
13.7	28517	1.7	108	55.0	—	**314 R3 (C)**	**BN225M4**	—	—	—	95800	112500	38300	374
13.7	28517	2.2	108	90.0	—	**315 R3 (C)**	**BN225M4**	—	—	—	95800	112500	38300	386
13.7	28517	2.5	108	90.0	—	**316 R3 (C)**	**BN225M4**	—	—	—	159300	177200	63800	386
15.2	25850	2.1	97.6	55.0	—	**314 R3 (B)**	**BN225M4**	—	—	—	93000	109200	37000	374
15.2	25850	2.7	97.6	75.0	—	**315 R3 (B)**	**BN225M4**	—	—	—	93000	109200	37000	386
16.0	24555	2.2	92.7	25.0	**314 L3**	—	**BN225M4**	—	—	—	91600	107600	36400	372
16.2	24171	2.8	91.3	30.0	**315 L3**	—	**BN225M4**	—	—	—	91200	107100	36200	384
16.2	24171	3.0	91.3	35.0	**316 L3**	—	**BN225M4**	—	—	—	151600	168600	60400	396
16.3	24028	2.0	90.7	55.0	—	**314 R3 (C)**	**BN225M4**	—	—	—	91000	106900	36200	374
16.3	24028	2.5	90.7	90.0	—	**315 R3 (C)**	**BN225M4**	—	—	—	91000	106900	36200	386
16.3	24028	2.9	90.7	90.0	—	**316 R3 (C)**	**BN225M4**	—	—	—	151300	168300	60300	386
18.0	21781	2.4	82.3	100.0	—	**314 R3 (B)**	**BN225M4**	—	—	—	194000	206600	60100	374
19.0	20599	2.5	77.8	55.0	—	**314 R3 (B)**	**BN225M4**	—	—	—	88400	103800	35000	374
20.0	19567	2.6	73.9	55.0	**314 L3**	—	**BN225M4**	—	—	—	86900	102000	34300	372
20.9	18723	2.3	70.7	35.0	—	**314 R3 (C)**	**BN225M4**	—	—	—	143800	159900	56900	374
20.9	18723	2.9	70.7	25.0	—	**315 R3 (C)**	**BN225M4**	—	—	—	85600	100500	33800	386
22.6	17356	2.9	65.5	30.0	—	**314 R3 (B)**	**BN225M4**	—	—	—	84600	99300	33300	374
23.6	16575	2.9	62.6	35.0	**314 L3**	—	**BN225M4**	—	—	—	140700	156500	55600	372
29.0	13524	2.8	51.1	55.0	—	**314 R3 (B)**	**BN225M4**	—	—	—	76600	89900	29800	374
32	12783	1.1	46.7	22.0	**310 L2**	—	**BN225M4**	—	—	—	47800	60200	20900	336
37	11078	2.7	40.5	30.0	**313 L2**	—	**BN225M4**	—	—	—	66900	79200	24600	360
38	10620	1.9	38.8	26.0	**311 L2**	—	**BN225M4**	—	—	—	53500	66600	19700	348
38	10567	1.3	38.6	22.0	**310 L2**	—	**BN225M4**	—	—	—	45200	56800	19600	336
45	8948	2.3	32.7	26.0	**311 L2**	—	**BN225M4**	—	—	—	50800	63300	18600	348
45	8904	1.5	32.6	22.0	**310 L2**	—	**BN225M4**	—	—	—	42900	54000	18600	336
48	8393	1.6	30.7	22.0	**310 L2**	—	**BN225M4**	—	—	—	42200	53000	18200	336
53	7659	1.7	28.0	22.0	**310 L2**	—	**BN225M4**	—	—	—	41000	51600	17600	336
54	7539	2.5	27.6	26.0	**311 L2**	—	**BN225M4**	—	—	—	48300	60100	17600	348
58	6972	2.6	25.5	26.0	**311 L2**	—	**BN225M4**	—	—	—	47100	58700	17100	348
58	6938	1.8	25.4	22.0	**310 L2**	—	**BN225M4**	—	—	—	39800	50100	17100	336

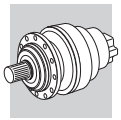

P_1 = 45 kW

n_2 min^{-1}	M_{n2} Nm	f_S	i	P_t kW					Rn_2 [N] MC	MZ	HC/PC	HZ/PZ	FZ	
58	6931	1.8	25.3	55.0	—	**310 R2 (C)**	**BN225M4**	—	—	—	39800	50100	17100	338
58	6931	2.5	25.3	90.0	—	**311 R2 (C)**	**BN225M4**	—	—	—	47100	58600	17100	374
68	5968	2.0	21.8	22.0	**310 L2**	—	**BN225M4**	—	—	—	38100	47900	16200	336
69	5875	3.0	21.5	26.0	**311 L2**	—	**BN225M4**	—	—	—	44800	55800	16200	348
69	5840	2.0	21.3	55.0	—	**310 R2 (C)**	**BN225M4**	—	—	—	37800	47600	16100	338
69	5840	2.9	21.3	90.0	—	**311 R2 (C)**	**BN225M4**	—	—	—	44700	55700	16100	374
81	5007	2.2	18.3	55.0	—	**310 R2 (B)**	**BN225M4**	—	—	—	36100	45400	15300	338
85	4756	2.4	17.4	22.0	**310 L2**	—	**BN225M4**	—	—	—	35600	44700	15100	336
89	4551	2.5	16.6	55.0	—	**310 R2 (C)**	**BN225M4**	—	—	—	35100	44100	14800	338
96	4218	2.5	15.4	55.0	—	**310 R2 (B)**	**BN225M4**	—	—	—	34300	43100	14500	338
100	4028	2.7	14.7	22.0	**310 L2**	—	**BN225M4**	—	—	—	33800	42600	14200	336
197	2117	1.9	7.50	18.0	**306 L1**	—	**BN225M4**	—	8150	9240	21300	24800	6120	300
239	1750	2.4	6.20	18.0	**306 L1**	—	**BN225M4**	—	7650	8670	20200	23500	5750	300
278	1505	2.7	5.33	18.0	**306 L1**	—	**BN225M4**	—	7280	8240	19300	22400	5470	300

P_1 = 55 kW

n_2 min^{-1}	M_{n2} Nm	f_S	i	P_t kW					Rn_2 [N] MC	MZ	HC/PC	HZ/PZ	FZ	
1.2	399701	2.2	1279	50.0	**323 L4**	—	**BN250M4**	—	—	—	—	—	1043200	446
1.2	373174	0.9	1195	30.0	**319 L4**	—	**BN250M4**	—	—	—	595600	656200	185400	426
1.3	350369	1.5	1122	35.0	**321 L4**	—	**BN250M4**	—	—	—	731900	867900	1114500	436
1.3	343828	2.5	1101	50.0	**323 L4**	—	**BN250M4**	—	—	—	—	—	992100	446
1.4	320273	2.7	1025	50.0	**323 L4**	—	**BN250M4**	—	—	—	—	—	968900	446
1.5	314433	1.1	1007	30.0	**319 L4**	—	**BN250M4**	—	—	—	577600	636300	179200	426
1.6	295218	2.0	945	35.0	**321 L4**	—	**BN250M4**	—	—	—	695300	824500	1052600	436
1.6	284828	1.2	912	30.0	**319 L4**	—	**BN250M4**	—	—	—	560700	617700	173400	426
1.6	284607	1.0	911	22.0	**318 L4**	—	**BN250M4**	—	—	—	477700	487500	169400	416
1.6	283140	1.2	906	115.0	—	**319 R4 (C)**	**BN250M4**	—	—	—	559700	616600	173000	428
1.7	265696	1.4	850	30.0	**319 L4**	—	**BN250M4**	—	—	—	549100	605000	169400	426
1.9	248748	2.2	796	35.0	**321 L4**	—	**BN250M4**	—	—	—	660400	783200	994200	436
1.9	243561	1.4	780	115.0	—	**319 R4 (C)**	**BN250M4**	—	—	—	535000	589400	164500	428
1.9	239808	1.1	768	22.0	**318 L4**	—	**BN250M4**	—	—	—	463300	472800	163700	416
2.0	230040	2.4	736	35.0	**321 L4**	—	**BN250M4**	—	—	—	645100	765000	968700	436
2.0	228677	2.3	732	125.0	—	**321 R4 (C)**	**BN250M4**	—	—	—	644000	763700	966700	438
2.0	226796	1.2	726	22.0	**318 L4**	—	**BN250M4**	—	—	—	455600	464900	160700	416
2.1	223874	1.6	717	30.0	**319 L4**	—	**BN250M4**	—	—	—	521600	574700	160000	426
2.1	215941	1.2	691	110.0	—	**318 R4 (C)**	**BN250M4**	—	—	—	448900	458100	158100	418
2.2	211727	1.7	678	30.0	**319 L4**	—	**BN250M4**	—	—	—	513000	565100	157000	426
2.3	205223	1.6	657	115.0	—	**319 R4 (C)**	**BN250M4**	—	—	—	508200	559900	155400	428
2.3	204522	1.6	655	95.0	—	**319 R4 (B)**	**BN250M4**	—	—	—	507700	559300	155200	428
2.3	202060	1.3	647	22.0	**318 L4**	—	**BN250M4**	—	—	—	440100	449100	154600	416
2.4	192681	2.6	617	125.0	—	**321 R4 (C)**	**BN250M4**	—	—	—	611700	725400	913100	438
2.4	191110	2.7	612	35.0	**321 L4**	—	**BN250M4**	—	—	—	610200	723600	910600	436
2.4	191097	1.4	612	22.0	**318 L4**	—	**BN250M4**	—	—	—	432800	441700	151800	416
2.5	185756	1.4	595	110.0	—	**318 R4 (C)**	**BN250M4**	—	—	—	429100	437900	150300	418
2.6	178399	1.9	571	30.0	**319 L4**	—	**BN250M4**	—	—	—	487300	536800	148300	426
2.6	175933	1.8	563	95.0	—	**319 R4 (B)**	**BN250M4**	—	—	—	485200	534600	147600	428
2.7	173413	1.8	555	115.0	—	**319 R4 (C)**	**BN250M4**	—	—	—	483100	532300	146900	428
2.8	165181	2.9	529	105.0	—	**321 R4 (B)**	**BN250M4**	—	—	—	584100	692700	867400	438
2.8	164982	2.0	528	30.0	**319 L4**	—	**BN250M4**	—	—	—	476000	524400	144500	426
2.8	164004	1.8	525	115.0	—	**319 R4 (C)**	**BN250M4**	—	—	—	475100	523500	144200	428
2.9	161017	1.6	515	22.0	**318 L4**	—	**BN250M4**	—	—	—	411100	419500	143300	416
2.9	160074	2.6	512	125.0	—	**321 R4 (C)**	**BN250M4**	—	—	—	578600	686200	858400	438
3.0	156517	1.6	501	110.0	—	**318 R4 (C)**	**BN250M4**	—	—	—	407600	416000	142000	418
3.0	155982	1.6	499	90.0	—	**318 R4 (B)**	**BN250M4**	—	—	—	407200	415600	141800	418
3.1	150141	2.6	481	125.0	—	**321 R4 (C)**	**BN250M4**	—	—	—	567600	673100	840200	438
3.1	148907	1.7	477	22.0	**318 L4**	—	**BN250M4**	—	—	—	401600	409800	139700	416
3.1	148240	2.0	475	95.0	—	**319 R4 (B)**	**BN250M4**	—	—	—	460900	507800	139400	428
3.1	148024	1.7	474	110.0	—	**318 R4 (C)**	**BN250M4**	—	—	—	400900	409100	139400	418
3.3	139181	2.9	446	105.0	—	**321 R4 (B)**	**BN250M4**	—	—	—	554800	658000	819300	438
3.3	139012	2.3	445	30.0	**319 L4**	—	**BN250M4**	—	—	—	452100	498100	136500	426

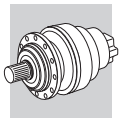

P_1 = 55 kW

n_2 min^{-1}	M_{n2} Nm	f_S	i	P_t kW					Rn_2 [N] MC	MZ	HC/PC	HZ/PZ	FZ	
3.3	138189	2.0	442	115.0	—	**319 R4 (C)**	**BN250M4**	—	—	—	451300	497200	136200	428
3.4	134178	1.8	430	90.0	—	**318 R4 (B)**	**BN250M4**	—	—	—	389200	397200	134900	418
3.5	131958	1.8	422	22.0	**318 L4**	—	**BN250M4**	—	—	—	387300	395200	134100	416
3.7	125468	1.9	402	22.0	**318 L4**	—	**BN250M4**	—	—	—	381500	389300	131900	416
3.7	125263	2.5	401	95.0	—	**319 R4 (B)**	**BN250M4**	—	—	—	438200	482800	131800	428
3.7	124733	2.6	399	125.0	—	**321 R4 (C)**	**BN250M4**	—	—	—	536900	636700	789900	438
3.7	124724	1.9	399	110.0	—	**318 R4 (C)**	**BN250M4**	—	—	—	380800	388600	131600	418
3.9	118466	2.6	379	95.0	—	**319 R4 (B)**	**BN250M4**	—	—	—	430900	474800	129400	428
4.0	115627	3.0	370	105.0	—	**321 R4 (B)**	**BN250M4**	—	—	—	524800	622400	770200	438
4.1	113058	2.0	362	90.0	—	**318 R4 (B)**	**BN250M4**	—	—	—	369700	377300	127400	418
4.3	108452	3.0	347	105.0	—	**321 R4 (B)**	**BN250M4**	—	—	—	514800	610500	753900	438
4.3	108321	2.8	347	30.0	**319 L4**	—	**BN250M4**	—	—	—	419500	462200	125600	426
4.3	107679	2.4	345	115.0	—	**319 R4 (C)**	**BN250M4**	—	—	—	418800	461400	125400	428
4.3	106923	2.1	342	90.0	—	**318 R4 (B)**	**BN250M4**	—	—	—	363600	371000	125100	418
4.4	105154	2.1	337	22.0	**318 L4**	—	**BN250M4**	—	—	—	361800	369200	124400	416
4.6	99819	2.9	320	95.0	—	**319 R4 (B)**	**BN250M4**	—	—	—	409400	451000	122200	428
4.7	97767	2.3	313	22.0	**318 L4**	—	**BN250M4**	—	—	—	353900	361200	121400	416
4.8	97188	2.3	311	110.0	—	**318 R4 (C)**	**BN250M4**	—	—	—	353300	360600	121100	418
4.8	95694	2.6	306	125.0	—	**321 R4 (C)**	**BN250M4**	—	—	—	495900	588000	723100	438
5.1	90099	2.9	288	105.0	—	**321 R4 (B)**	**BN250M4**	—	—	—	487000	577500	708700	438
5.1	90093	2.4	288	90.0	—	**318 R4 (B)**	**BN250M4**	—	—	—	345400	352500	118100	418
5.6	81938	2.6	262	22.0	**318 L4**	—	**BN250M4**	—	—	—	335700	342600	114400	416
5.9	81520	1.5	252	35.0	**317 L3**	—	**BN250M4**	—	—	—	471100	558700	683100	406
5.9	77781	2.9	249	95.0	—	**319 R4 (B)**	**BN250M4**	—	—	—	379800	418500	112500	428
6.6	70202	2.9	225	90.0	—	**318 R4 (B)**	**BN250M4**	—	—	—	320500	327000	108700	418
6.7	69124	3.0	221	105.0	—	**321 R4 (B)**	**BN250M4**	—	—	—	449800	533400	648800	438
7.0	68689	2.1	213	35.0	**317 L3**	—	**BN250M4**	—	—	—	251200	267500	80000	406
7.1	66889	1.2	207	30.0	**315 L3**	—	**BN250M4**	—	—	—	116600	136900	47600	384
7.2	66558	1.0	206	25.0	**314 L3**	—	**BN250M4**	—	—	—	116400	136700	47500	372
8.3	57876	2.4	179	35.0	**317 L3**	—	**BN250M4**	—	—	—	238700	254100	75600	406
8.5	56360	1.4	174	30.0	**315 L3**	—	**BN250M4**	—	—	—	110700	130000	45000	384
8.5	56081	1.1	174	25.0	**314 L3**	—	**BN250M4**	—	—	—	110600	129800	44900	372
8.9	53524	2.3	166	35.0	**317 L3**	—	**BN250M4**	—	—	—	233100	248200	73600	406
9.0	53302	1.5	165	30.0	**315 L3**	—	**BN250M4**	—	—	—	108900	127900	44100	384
9.0	53302	1.5	165	35.0	**316 L3**	—	**BN250M4**	—	—	—	181100	201400	73500	396
9.0	53206	2.2	165	100.0	—	**317 R3 (C)**	**BN250M4**	—	—	—	232700	247800	73500	406
9.0	53039	1.2	164	25.0	**314 L3**	—	**BN250M4**	—	—	—	108700	127700	44100	372
9.4	50751	1.0	157	55.0	—	**314 R3 (C)**	**BN250M4**	—	—	—	107300	126000	43400	374
9.4	50751	1.3	157	90.0	—	**315 R3 (C)**	**BN250M4**	—	—	—	107300	126000	43400	386
10.6	44912	1.8	139	30.0	**315 L3**	—	**BN250M4**	—	—	—	103500	121500	41700	384
10.6	44912	1.8	139	35.0	**316 L3**	—	**BN250M4**	—	—	—	172000	191300	69500	396
10.7	44831	2.6	139	100.0	—	**317 R3 (C)**	**BN250M4**	—	—	—	221000	235400	69400	406
10.7	44690	1.4	138	25.0	**314 L3**	—	**BN250M4**	—	—	—	103300	121300	41600	372
10.8	44466	2.6	138	35.0	**317 L3**	—	**BN250M4**	—	—	—	220500	234800	69200	406
11.0	43656	1.4	135	55.0	—	**314 R3 (C)**	**BN250M4**	—	—	—	102600	120400	41300	374
11.0	43656	1.7	135	90.0	—	**315 R3 (C)**	**BN250M4**	—	—	—	102600	120400	41300	386
12.4	38433	2.9	119	90.0	—	**317 R3 (B)**	**BN250M4**	—	—	—	211100	224700	65900	406
12.6	37842	2.1	117	35.0	**316 L3**	—	**BN250M4**	—	—	—	163400	181700	65600	396
12.8	37466	2.9	116	35.0	**317 L3**	—	**BN250M4**	—	—	—	209500	223000	65400	406
12.8	37244	2.6	115	100.0	—	**317 R3 (C)**	**BN250M4**	—	—	—	209100	222600	65300	406
13.0	36785	1.4	114	55.0	—	**314 R3 (C)**	**BN250M4**	—	—	—	97400	114400	39000	374
13.0	36785	1.8	114	90.0	—	**315 R3 (C)**	**BN250M4**	—	—	—	97400	114400	39000	386
13.0	36659	1.3	113	40.0	—	**314 R3 (B)**	**BN250M4**	—	—	—	95300	111900	38100	374
13.0	36659	1.6	113	75.0	—	**315 R3 (B)**	**BN250M4**	—	—	—	97300	114300	38900	386
13.7	34996	2.0	108	30.0	**315 L3**	—	**BN250M4**	—	—	—	96000	112700	38400	384
13.7	34996	2.2	108	35.0	**316 L3**	—	**BN250M4**	—	—	—	159600	177500	63900	396
13.7	34933	2.6	108	100.0	—	**317 R3 (C)**	**BN250M4**	—	—	—	205100	218400	63900	406
13.7	34823	1.6	108	25.0	**314 L3**	—	**BN250M4**	—	—	—	95900	112500	38300	372
13.7	34789	1.4	108	55.0	—	**314 R3 (C)**	**BN250M4**	—	—	—	95800	112500	38300	374
13.7	34789	1.8	108	90.0	—	**315 R3 (C)**	**BN250M4**	—	—	—	95800	112500	38300	386
13.7	34789	2.1	108	90.0	—	**316 R3 (C)**	**BN250M4**	—	—	—	159300	177200	63800	386
14.8	32383	3.0	100	90.0	—	**317 R3 (B)**	**BN250M4**	—	—	—	200500	213500	62300	406
15.2	31535	1.7	97.6	40.0	—	**314 R3 (B)**	**BN250M4**	—	—	—	91100	107000	36200	374
15.2	31535	2.2	97.6	75.0	—	**315 R3 (B)**	**BN250M4**	—	—	—	93000	109200	37000	386
16.0	29956	1.8	92.7	25.0	**314 L3**	—	**BN250M4**	—	—	—	91600	107600	36400	372

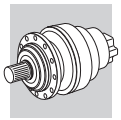

P_1 = 55 kW

n_2 min^{-1}	M_{n2} Nm	f_S	i	P_t kW					Rn_2 [N] MC	MZ	HC/PC	HZ/PZ	FZ	
16.2	29487	2.3	91.3	30.0	**315 L3**	—	**BN250M4**	—	—	—	91200	107100	36200	384
16.2	29487	2.4	91.3	35.0	**316 L3**	—	**BN250M4**	—	—	—	151600	168600	60400	396
16.3	29313	1.6	90.7	55.0	—	**314 R3 (C)**	**BN250M4**	—	—	—	91000	106900	36200	374
16.3	29313	2.0	90.7	90.0	—	**315 R3 (C)**	**BN250M4**	—	—	—	91000	106900	36200	386
16.3	29313	2.4	90.7	90.0	—	**316 R3 (C)**	**BN250M4**	—	—	—	151300	168300	60300	386
16.5	29022	2.6	89.8	100.0	—	**317 R3 (C)**	**BN250M4**	—	—	—	194000	206600	60100	406
17.8	26903	3.0	83.3	90.0	—	**317 R3 (B)**	**BN250M4**	—	—	—	189700	201900	58600	406
18.0	26571	2.0	82.3	40.0	—	**314 R3 (B)**	**BN250M4**	—	—	—	86600	101600	34200	374
18.0	26571	2.5	82.3	75.0	—	**315 R3 (B)**	**BN250M4**	—	—	—	88400	103800	35000	386
18.9	25234	3.0	78.1	90.0	—	**317 R3 (B)**	**BN250M4**	—	—	—	186000	198100	57300	406
19.0	25129	2.0	77.8	40.0	—	**314 R3 (B)**	**BN250M4**	—	—	—	85100	100000	33600	374
19.0	25129	2.6	77.8	75.0	—	**315 R3 (B)**	**BN250M4**	—	—	—	86900	102000	34300	386
19.0	25129	2.6	77.8	75.0	—	**316 R3 (B)**	**BN250M4**	—	—	—	144500	160700	57200	386
19.3	24713	2.8	76.5	35.0	**316 L3**	—	**BN250M4**	—	—	—	143800	159900	56900	396
20.0	23871	2.1	73.9	25.0	**314 L3**	—	**BN250M4**	—	—	—	85600	100500	33800	372
20.8	22977	2.7	71.1	30.0	**315 L3**	—	**BN250M4**	—	—	—	84600	99300	33300	384
20.8	22977	2.9	71.1	35.0	**316 L3**	—	**BN250M4**	—	—	—	140700	156500	55600	396
20.9	22841	1.9	70.7	55.0	—	**314 R3 (C)**	**BN250M4**	—	—	—	84500	99200	33300	374
20.9	22841	2.4	70.7	90.0	—	**315 R3 (C)**	**BN250M4**	—	—	—	84500	99200	33300	386
20.9	22841	2.6	70.7	90.0	—	**316 R3 (C)**	**BN250M4**	—	—	—	140400	156200	55400	386
21.5	22265	2.6	68.9	100.0	—	**317 R3 (C)**	**BN250M4**	—	—	—	179200	190800	55000	406
22.6	21174	2.3	65.5	40.0	—	**314 R3 (B)**	**BN250M4**	—	—	—	80900	94900	31700	374
22.6	21174	2.9	65.5	75.0	—	**315 R3 (B)**	**BN250M4**	—	—	—	82600	96900	32400	386
22.8	20963	2.9	64.9	90.0	—	**317 R3 (B)**	**BN250M4**	—	—	—	176000	187400	53900	406
23.6	20220	2.4	62.6	25.0	**314 L3**	—	**BN250M4**	—	—	—	81400	95600	31900	372
29.0	16499	2.3	51.1	40.0	—	**314 R3 (B)**	**BN250M4**	—	—	—	75000	88100	29200	374
29.0	16499	2.9	51.1	75.0	—	**315 R3 (B)**	**BN250M4**	—	—	—	76600	89900	29800	386
29.7	16083	2.9	49.8	90.0	—	**317 R3 (B)**	**BN250M4**	—	—	—	162500	173000	49300	406
32	15594	0.9	46.7	22.0	**310 L2**	—	**BN250M4**	—	—	—	47800	60200	20900	336
37	13515	2.2	40.5	30.0	**313 L2**	—	**BN250M4**	—	—	—	66900	79200	24600	360
38	12955	1.5	38.8	26.0	**311 L2**	—	**BN250M4**	—	—	—	53500	66600	19700	348
38	12891	1.1	38.6	22.0	**310 L2**	—	**BN250M4**	—	—	—	45200	56800	19600	336
38	12891	2.7	38.6	40.0	**314 L2**	—	**BN250M4**	—	—	—	69000	81000	26600	372
44	11228	2.6	33.6	30.0	**313 L2**	—	**BN250M4**	—	—	—	63300	74900	23100	360
45	10916	1.9	32.7	26.0	**311 L2**	—	**BN250M4**	—	—	—	50800	63300	18600	348
45	10862	1.2	32.6	22.0	**310 L2**	—	**BN250M4**	—	—	—	42900	54000	18600	336
48	10239	1.3	30.7	22.0	**310 L2**	—	**BN250M4**	—	—	—	42200	53000	18200	336
52	9460	2.9	28.4	30.0	**313 L2**	—	**BN250M4**	—	—	—	60100	71200	21800	360
53	9344	1.4	28.0	22.0	**310 L2**	—	**BN250M4**	—	—	—	41000	51600	17600	336
54	9198	2.1	27.6	26.0	**311 L2**	—	**BN250M4**	—	—	—	48300	60100	17600	348
56	8821	2.6	26.4	90.0	—	**313 R2 (C)**	**BN250M4**	—	—	—	58900	69700	21300	362
58	8506	2.2	25.5	26.0	**311 L2**	—	**BN250M4**	—	—	—	47100	58700	17100	348
58	8464	1.5	25.4	22.0	**310 L2**	—	**BN250M4**	—	—	—	39800	50100	17100	336
58	8455	2.1	25.3	55.0	—	**311 R2 (C)**	**BN250M4**	—	—	—	39800	50100	17100	374
67	7328	2.6	22.0	90.0	—	**313 R2 (C)**	**BN250M4**	—	—	—	47100	58600	17100	362
68	7281	1.7	21.8	22.0	**310 L2**	—	**BN250M4**	—	—	—	38100	47900	16200	336
69	7167	2.4	21.5	26.0	**311 L2**	—	**BN250M4**	—	—	—	44800	55800	16200	348
69	7124	2.4	21.3	90.0	—	**311 R2 (C)**	**BN250M4**	—	—	—	44700	55700	16100	374
78	6372	3.0	19.1	75.0	—	**313 R2 (B)**	**BN250M4**	—	—	—	53400	63200	19100	362
81	6108	2.6	18.3	75.0	—	**311 R2 (B)**	**BN250M4**	—	—	—	42700	53200	15300	374
82	6007	2.8	18.0	26.0	**311 L2**	—	**BN250M4**	—	—	—	42500	52900	15200	348
85	5802	1.9	17.4	22.0	**310 L2**	—	**BN250M4**	—	—	—	35600	44700	15100	336
88	5622	2.6	16.8	90.0	—	**313 R2 (C)**	**BN250M4**	—	—	—	51400	60900	18300	362
88	5585	2.9	16.7	26.0	**311 L2**	—	**BN250M4**	—	—	—	41600	51800	14900	348
89	5552	2.6	16.6	90.0	—	**311 R2 (C)**	**BN250M4**	—	—	—	41500	51700	14800	374
93	5293	3.0	15.9	75.0	—	**313 R2 (B)**	**BN250M4**	—	—	—	50500	59800	18000	362
96	5146	3.0	15.4	75.0	—	**311 R2 (B)**	**BN250M4**	—	—	—	40500	50500	14500	374
100	4914	2.2	14.7	22.0	**310 L2**	—	**BN250M4**	—	—	—	33800	42600	14200	336
122	4061	3.0	12.2	75.0	—	**313 R2 (B)**	**BN250M4**	—	—	—	46700	55200	16400	362
123	4010	3.0	12.0	75.0	—	**311 R2 (B)**	**BN250M4**	—	—	—	37600	46900	13300	374
197	2583	1.6	7.50	18.0	**306 L1**	—	**BN250M4**	—	8150	9240	21300	24800	6120	300
238	2146	2.7	6.23	22.0	**307 L1**	—	**BN250M4**	—	8520	10700	21700	28500	7400	312
239	2135	2.0	6.20	18.0	**306 L1**	—	**BN250M4**	—	7650	8670	20200	23500	5750	300
278	1837	2.2	5.33	18.0	**306 L1**	—	**BN250M4**	—	7280	8240	19300	22400	5470	300
348	1463	2.7	4.25	18.0	**306 L1**	—	**BN250M4**	—	6750	7640	18000	21000	5070	300

A

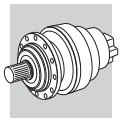

A

25.2 3/V - 3/A GEARMOTOR RATING CHARTS

Reading the rating chart.

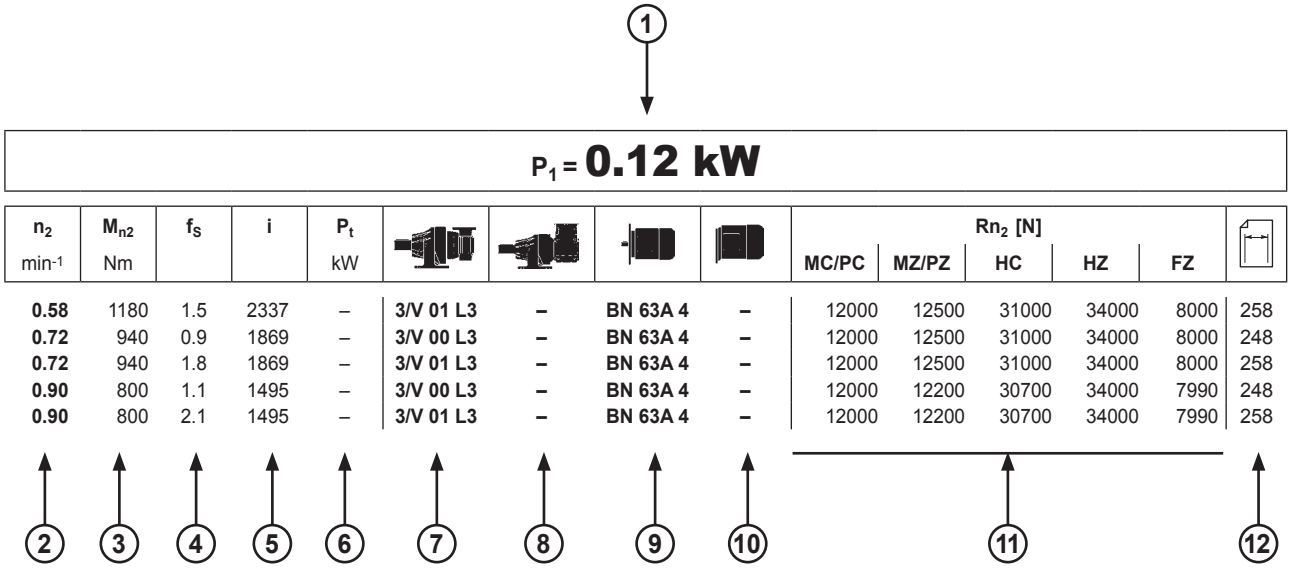

1	Power applied at gearbox input shaft
2	Gearbox output speed
3	Torque delivered at output shaft: - specified service factor - 10000 h theoretical lifetime
4	Service factor
5	Gear ratio
6	Gearbox thermal capacity
7	Model and frame size of combined planetary + worm gear unit
8	Model and frame size of combined planetary + helical bevel gear unit
9	IEC motor size and pole number
10	Compact motor size and pole number
11	Permitted overhung loading on output shaft, based on: - service factor f_S=1 - 10000 h theoretical lifetime - speed of output n_2 For forces not applied at shaft middlepoint, see diagrams provided in the specific gearbox overall dimensioning pages
12	Dimensions page. Gearmotor overall dimensions refer to matches with BONFIGLIOLI motors only

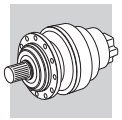

A

P_1 = 0.12 kW

n_2	M_{n2}	f_S	i	Pt					Rn_2 [N]					
min^{-1}	Nm			kW					MC/PC	MZ/PZ	HC	HZ	FZ	
0.58	1180	1.5	2337	–	**3/V 01 L3**	**–**	**BN 63A 4**	**–**	12000	12500	31000	34000	8000	258
0.72	940	0.9	1869	–	**3/V 00 L3**	**–**	**BN 63A 4**	**–**	12000	12500	31000	34000	8000	248
0.72	940	1.8	1869	–	**3/V 01 L3**	**–**	**BN 63A 4**	**–**	12000	12500	31000	34000	8000	258
0.90	800	1.1	1495	–	**3/V 00 L3**	**–**	**BN 63A 4**	**–**	12000	12200	30700	34000	7990	248
0.90	800	2.1	1495	–	**3/V 01 L3**	**–**	**BN 63A 4**	**–**	12000	12200	30700	34000	7990	258
0.98	700	1.8	1381	–	**3/V 00 L3**	**–**	**BN 63A 4**	**–**	11800	11800	29900	34000	7780	248
0.98	700	2.7	1381	–	**3/V 01 L3**	**–**	**BN 63A 4**	**–**	11800	11800	29900	34000	7780	258
1.1	640	1.3	1198	–	**3/V 00 L3**	**–**	**BN 63A 4**	**–**	11300	11300	28700	33000	7420	248
1.1	640	2.6	1198	–	**3/V 01 L3**	**–**	**BN 63A 4**	**–**	11300	11300	28700	33000	7420	258
1.2	560	2.1	1107	–	**3/V 00 L3**	**–**	**BN 63A 4**	**–**	11000	11000	28000	32200	7230	248
1.4	600	1.3	997	–	**3/V 00 L3**	**–**	**BN 63A 4**	**–**	10600	10600	27100	31200	6980	248
1.4	600	2.7	997	–	**3/V 01 L3**	**–**	**BN 63A 4**	**–**	10600	10600	27100	31200	6980	258
1.5	455	1.7	903	–	**3/V 00 L3**	**–**	**BN 63A 4**	**–**	10300	10300	26400	30300	6760	248
1.5	455	2.7	903	–	**3/V 01 L3**	**–**	**BN 63A 4**	**–**	10300	10300	26400	30300	6760	258
1.7	410	2.7	818	–	**3/V 00 L3**	**–**	**BN 63A 4**	**–**	9940	9940	25600	29400	6540	248
2.0	390	2.8	689	–	**3/V 00 L3**	**–**	**BN 63A 4**	**–**	9390	9390	24300	27900	6170	248
2.0	520	2.2	665	–	**–**	**3/A 01 L2**	**BN 63A 4**	**–**	9280	9280	24000	27600	6100	259
2.0	510	1.2	660	–	**–**	**3/A 00 L2**	**BN 63A 4**	**–**	9250	9250	24000	27500	6080	249
2.4	320	2.3	562	–	**3/V 00 L3**	**–**	**BN 63A 4**	**–**	8770	8770	22900	26300	5770	248
2.5	425	1.4	550	–	**–**	**3/A 00 L2**	**BN 63A 4**	**–**	8710	8710	22700	26100	5730	249
2.5	415	2.7	533	–	**–**	**3/A 01 L2**	**BN 63A 4**	**–**	8620	8620	22500	25800	5660	259
3.1	340	2.0	441	–	**–**	**3/A 00 L2**	**BN 63A 4**	**–**	8090	8090	21200	24400	5320	249
3.4	305	2.7	393	–	**–**	**3/A 01 L2**	**BN 63A 4**	**–**	7790	7790	20500	23600	5120	259
3.5	305	1.8	391	–	**–**	**3/A 00 L2**	**BN 63A 4**	**–**	7770	7770	20500	23500	5110	249
3.7	285	2.0	369	–	**–**	**3/A 00 L2**	**BN 63A 4**	**–**	7630	7630	20100	23100	5010	249
4.2	245	1.8	319	–	**–**	**3/A 00 L2**	**BN 63A 4**	**–**	7260	7260	19300	22100	4770	249
4.6	230	2.8	296	–	**–**	**3/A 00 L2**	**BN 63A 4**	**–**	7080	7080	18900	21700	4660	249
5.3	195	2.8	253	–	**–**	**3/A 00 L2**	**BN 63A 4**	**–**	6720	6720	18000	20700	4420	249

P_1 = 0.18 kW

n_2	M_{n2}	f_S	i	Pt					Rn_2 [N]					
min^{-1}	Nm			kW					MC/PC	MZ/PZ	HC	HZ	FZ	
0.56	1800	1.0	2337	–	**3/V 01 L3**	**–**	**BN 63B 4**	**–**	12000	12500	31000	34000	8000	258
0.71	1440	1.2	1869	–	**3/V 01 L3**	**–**	**BN 63B 4**	**–**	12000	12500	31000	34000	8000	258
0.88	1230	1.4	1495	–	**3/V 01 L3**	**–**	**BN 63B 4**	**–**	12000	12200	30700	34000	7990	258
0.96	1060	1.2	1381	–	**3/V 00 L3**	**–**	**BN 63B 4**	**–**	11800	11800	29900	34000	7780	248
0.96	1060	1.8	1381	–	**3/V 01 L3**	**–**	**BN 63B 4**	**–**	11800	11800	29900	34000	7780	258
1.1	980	1.7	1198	–	**3/V 01 L3**	**–**	**BN 63B 4**	**–**	11300	11300	28700	33000	7420	258
1.2	850	1.4	1107	–	**3/V 00 L3**	**–**	**BN 63B 4**	**–**	11000	11000	28000	32200	7230	248
1.2	910	2.2	1105	–	**3/V 01 L3**	**–**	**BN 63B 4**	**–**	11000	11000	28000	32200	7230	258
1.3	910	1.7	997	–	**3/V 01 L3**	**–**	**BN 63B 4**	**–**	10600	10600	27100	31200	6980	258
1.5	700	1.1	903	–	**3/V 00 L3**	**–**	**BN 63B 4**	**–**	10300	10300	26400	30300	6760	248
1.5	700	1.8	903	–	**3/V 01 L3**	**–**	**BN 63B 4**	**–**	10300	10300	26400	30300	6760	258
1.6	630	1.8	818	–	**3/V 00 L3**	**–**	**BN 63B 4**	**–**	9940	9940	25600	29400	6540	248
1.7	730	2.1	799	–	**3/V 01 L3**	**–**	**BN 63B 4**	**–**	9860	9860	25400	29200	6480	258
1.8	870	2.1	731	–	**–**	**3/A 03 L2**	**BN 63B 4**	**–**	29400	34000	50500	60700	18900	269
1.9	600	1.8	689	–	**3/V 00 L3**	**–**	**BN 63B 4**	**–**	9390	9390	24300	27900	6170	248
1.9	600	2.9	689	–	**3/V 01 L3**	**–**	**BN 63B 4**	**–**	9390	9390	24300	27900	6170	258
2.0	790	1.5	665	–	**–**	**3/A 01 L2**	**BN 63B 4**	**–**	9280	9280	24000	27600	6100	259
2.0	540	2.0	654	–	**3/V 00 L3**	**–**	**BN 63B 4**	**–**	9230	9230	23900	27500	6070	248
2.0	540	2.2	654	–	**3/V 01 L3**	**–**	**BN 63B 4**	**–**	9230	9230	23900	27500	6070	258
2.2	720	2.5	605	–	**–**	**3/A 03 L2**	**BN 63B 4**	**–**	27600	31900	47700	57400	17700	269
2.3	680	2.6	574	–	**–**	**3/A 03 L2**	**BN 63B 4**	**–**	27200	31400	46900	56500	17400	269
2.3	490	1.5	562	–	**3/V 00 L3**	**–**	**BN 63B 4**	**–**	8770	8770	22900	26300	5770	248
2.3	490	2.9	562	–	**3/V 01 L3**	**–**	**BN 63B 4**	**–**	8770	8770	22900	26300	5770	258
2.4	650	0.9	550	–	**–**	**3/A 00 L2**	**BN 63B 4**	**–**	8710	8710	22700	26100	5730	249
2.5	630	1.8	533	–	**–**	**3/A 01 L2**	**BN 63B 4**	**–**	8620	8620	22500	25800	5660	259
2.6	440	2.4	509	–	**3/V 00 L3**	**–**	**BN 63B 4**	**–**	8490	8490	22200	25500	5580	248
2.6	440	2.9	509	–	**3/V 01 L3**	**–**	**BN 63B 4**	**–**	8490	8490	22200	25500	5580	258
2.7	590	2.9	495	–	**–**	**3/A 03 L2**	**BN 63B 4**	**–**	25900	29800	44900	54000	16600	269
2.9	540	2.1	454	–	**–**	**3/A 01 L2**	**BN 63B 4**	**–**	8170	8170	21400	24600	5370	259

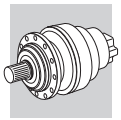

P_1 = 0.18 kW

n_2 min^{-1}	M_{n2} Nm	f_S	i	Pt kW					Rn$_2$ [N] MC/PC	MZ/PZ	HC	HZ	FZ	
3.0	520	1.3	441	–	–	**3/A 00 L2**	**BN 63B 4**	–	8090	8090	21200	24400	5320	249
3.0	355	2.0	436	–	**3/V 00 L3**	–	**BN 63B 4**	–	8060	8060	21200	24300	5300	248
3.2	360	2.8	415	–	**3/V 00 L3**	–	**BN 63B 4**	–	7930	7930	20900	24000	5210	248
3.4	465	1.8	393	–	–	**3/A 01 L2**	**BN 63B 4**	–	7790	7790	20500	23600	5120	259
3.4	465	1.2	391	–	–	**3/A 00 L2**	**BN 63B 4**	–	7770	7770	20500	23500	5110	249
3.6	440	1.3	369	–	–	**3/A 00 L2**	**BN 63B 4**	–	7630	7630	20100	23100	5010	249
4.1	380	1.2	319	–	–	**3/A 00 L2**	**BN 63B 4**	–	7260	7260	19300	22100	4770	249
4.5	350	1.9	296	–	–	**3/A 00 L2**	**BN 63B 4**	–	7080	7080	18900	21700	4660	249
5.2	300	1.8	253	–	–	**3/A 00 L2**	**BN 63B 4**	–	6720	6720	18000	20700	4420	249
6.0	260	2.4	219	–	–	**3/A 00 L2**	**BN 63B 4**	–	6400	6400	17200	19800	4210	249
6.5	240	2.7	203	–	–	**3/A 00 L2**	**BN 63B 4**	–	6240	6240	16800	19300	4100	249
7.7	205	2.7	171	–	–	**3/A 00 L2**	**BN 63B 4**	–	5900	5900	16000	18400	3880	249

P_1 = 0.25 kW

n_2 min^{-1}	M_{n2} Nm	f_S	i	Pt kW					Rn$_2$ [N] MC/PC	MZ/PZ	HC	HZ	FZ	
0.90	1680	1.0	1495	–	**3/V 01 L3**	–	**BN 63C 4**	–	12000	12200	30700	34000	7990	258
0.97	1460	1.3	1381	–	**3/V 01 L3**	–	**BN 63C 4**	–	11800	11800	29900	34000	7780	258
1.1	1340	1.2	1198	–	**3/V 01 L3**	–	**BN 63C 4**	–	11300	11300	28700	33000	7420	258
1.2	1170	1.0	1107	–	**3/V 00 L3**	–	**BN 63C 4**	–	11000	11000	28000	32200	7230	248
1.2	1240	1.6	1105	–	**3/V 01 L3**	–	**BN 63C 4**	–	11000	11000	28000	32200	7230	258
1.3	1250	1.3	997	–	**3/V 01 L3**	–	**BN 63C 4**	–	10600	10600	27100	31200	6980	258
1.5	950	1.3	903	–	**3/V 01 L3**	–	**BN 63C 4**	–	10300	10300	26400	30300	6760	258
1.6	860	1.3	818	–	**3/V 00 L3**	–	**BN 63C 4**	–	9940	9940	25600	29400	6540	248
1.7	1000	1.5	799	–	**3/V 01 L3**	–	**BN 63C 4**	–	9860	9860	25400	29200	6480	258
1.8	1190	1.5	731	–	–	**3/A 03 L2**	**BN 63C 4**	–	29400	34000	50500	60700	18900	269
1.9	820	1.3	689	–	**3/V 00 L3**	–	**BN 63C 4**	–	9390	9390	24300	27900	6170	248
1.9	820	2.1	689	–	**3/V 01 L3**	–	**BN 63C 4**	–	9390	9390	24300	27900	6170	258
2.0	1080	1.1	665	–	–	**3/A 01 L2**	**BN 63C 4**	–	9280	9280	24000	27600	6100	259
2.0	730	1.5	654	–	**3/V 00 L3**	–	**BN 63C 4**	–	9230	9230	23900	27500	6070	248
2.0	730	1.6	654	–	**3/V 01 L3**	–	**BN 63C 4**	–	9230	9230	23900	27500	6070	258
2.2	980	1.8	605	–	–	**3/A 03 L2**	**BN 63C 4**	–	27600	31900	47700	57400	17700	269
2.3	930	1.9	574	–	–	**3/A 03 L2**	**BN 63C 4**	–	27200	31400	46900	56500	17400	269
2.4	670	1.1	562	–	**3/V 00 L3**	–	**BN 63C 4**	–	8770	8770	22900	26300	5770	248
2.4	670	2.1	562	–	**3/V 01 L3**	–	**BN 63C 4**	–	8770	8770	22900	26300	5770	258
2.5	860	1.3	533	–	–	**3/A 01 L2**	**BN 63C 4**	–	8620	8620	22500	25800	5660	259
2.6	840	3.0	520	–	–	**3/A 04 L2**	**BN 63C 4**	–	26300	30300	45600	54800	16900	281
2.6	610	1.7	509	–	**3/V 00 L3**	–	**BN 63C 4**	–	8490	8490	22200	25500	5580	248
2.6	610	2.1	509	–	**3/V 01 L3**	–	**BN 63C 4**	–	8490	8490	22200	25500	5580	258
2.7	800	2.1	495	–	–	**3/A 03 L2**	**BN 63C 4**	–	25900	29800	44900	54000	16600	269
2.9	740	1.6	454	–	–	**3/A 01 L2**	**BN 63C 4**	–	8170	8170	21400	24600	5370	259
3.0	580	2.4	443	–	**3/V 01 L3**	–	**BN 63C 4**	–	8100	8100	21300	24400	5330	258
3.0	720	1.0	441	–	–	**3/A 00 L2**	**BN 63C 4**	–	8090	8090	21200	24400	5320	249
3.1	490	1.5	436	–	**3/V 00 L3**	–	**BN 63C 4**	–	8060	8060	21200	24300	5300	248
3.2	495	2.0	415	–	**3/V 00 L3**	–	**BN 63C 4**	–	7930	7930	20900	24000	5210	248
3.3	660	2.9	409	–	–	**3/A 03 L2**	**BN 63C 4**	–	24300	28000	42400	51000	15600	269
3.4	640	1.3	393	–	–	**3/A 01 L2**	**BN 63C 4**	–	7790	7790	20500	23600	5120	259
3.6	600	0.9	369	–	–	**3/A 00 L2**	**BN 63C 4**	–	7630	7630	20100	23100	5010	249
3.7	590	2.3	364	–	–	**3/A 01 L2**	**BN 63C 4**	–	7590	7590	20100	23000	4990	259
4.3	500	2.3	311	–	–	**3/A 01 L2**	**BN 63C 4**	–	7200	7200	19100	22000	4740	259
4.5	480	1.4	296	–	–	**3/A 00 L2**	**BN 63C 4**	–	7080	7080	18900	21700	4660	249
5.0	435	2.3	269	–	–	**3/A 01 L2**	**BN 63C 4**	–	6860	6860	18300	21000	4510	259
5.3	415	2.8	255	–	–	**3/A 01 L2**	**BN 63C 4**	–	6740	6740	18000	20700	4430	259
5.3	410	1.3	253	–	–	**3/A 00 L2**	**BN 63C 4**	–	6720	6720	18000	20700	4420	249
6.1	355	2.3	220	–	–	**3/A 01 L2**	**BN 63C 4**	–	6410	6410	17200	19800	4220	259
6.1	355	1.7	219	–	–	**3/A 00 L2**	**BN 63C 4**	–	6400	6400	17200	19800	4210	249
6.6	330	2.0	203	–	–	**3/A 00 L2**	**BN 63C 4**	–	6240	6240	16800	19300	4100	249
7.8	280	2.0	171	–	–	**3/A 00 L2**	**BN 63C 4**	–	5900	5900	16000	18400	3880	249
10.0	215	2.5	134	–	–	**3/A 00 L2**	**BN 63C 4**	–	5440	5440	14900	17100	3580	249

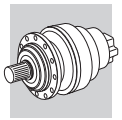

P_1 = 0.37 kW

n_2	M_{n2}	f_S	i	Pt					Rn_2 [N]					
min^{-1}	Nm			kW					MC/PC	MZ/PZ	HC	HZ	FZ	
0.53	4620	1.5	2588	–	**3/V 06 L3**	**–**	**BN 71B 4**	**M 1SD 4**	45000	51000	101000	119000	35000	304
0.61	3930	1.1	2232	–	**3/V 05 L3**	**–**	**BN 71B 4**	**M 1SD 4**	36000	42000	64000	74000	24000	292
0.64	3820	2.2	2139	–	**3/V 06 L3**	**–**	**BN 71B 4**	**M 1SD 4**	45000	51000	101000	119000	35000	304
0.77	3150	1.5	1786	–	**3/V 05 L3**	**–**	**BN 71B 4**	**M 1SD 4**	36000	42000	64000	74000	24000	292
0.77	3160	2.7	1768	–	**3/V 06 L3**	**–**	**BN 71B 4**	**M 1SD 4**	45000	51000	101000	119000	35000	304
0.79	2830	1.0	1728	–	**3/V 03 L3**	**–**	**BN 71B 4**	**M 1SD 4**	36000	42000	64000	74000	24000	268
0.82	3150	1.4	1674	–	**3/V 05 L3**	**–**	**BN 71B 4**	**M 1SD 4**	36000	42000	64000	74000	24000	292
0.85	2640	0.9	1610	–	**3/V 03 L3**	**–**	**BN 71B 4**	**M 1SD 4**	36000	42000	64000	74000	24000	268
0.89	2710	1.4	1536	–	**3/V 04 L3**	**–**	**BN 71B 4**	**M 1SD 4**	36000	42000	63100	74000	24000	280
0.96	2520	1.8	1431	–	**3/V 05 L3**	**–**	**BN 71B 4**	**M 1SD 4**	36000	42000	61700	74000	23600	292
0.97	2670	1.1	1419	–	**3/V 04 L3**	**–**	**BN 71B 4**	**M 1SD 4**	36000	42000	61600	74000	23600	280
0.99	2270	1.2	1385	–	**3/V 03 L3**	**–**	**BN 71B 4**	**M 1SD 4**	36000	42000	61100	73600	23400	268
1.1	2170	1.7	1231	–	**3/V 04 L3**	**–**	**BN 71B 4**	**M 1SD 4**	35000	40400	59000	71000	22500	280
1.1	2170	2.5	1231	–	**3/V 05 L3**	**–**	**BN 71B 4**	**M 1SD 4**	35000	40400	59000	71000	22500	292
1.2	1950	1.2	1189	–	**3/V 03 L3**	**–**	**BN 71B 4**	**M 1SD 4**	34600	40000	58400	70300	22200	268
1.2	2170	1.6	1152	–	**3/V 04 L3**	**–**	**BN 71B 4**	**M 1SD 4**	34300	39600	57900	69600	22000	280
1.2	2180	2.0	1116	–	**3/V 05 L3**	**–**	**BN 71B 4**	**M 1SD 4**	33900	39100	57300	69000	21700	292
1.2	1810	1.1	1105	–	**3/V 01 L3**	**–**	**BN 71B 4**	**–**	11000	11000	28000	32200	7230	258
1.3	1860	2.4	1057	–	**3/V 05 L3**	**–**	**BN 71B 4**	**M 1SD 4**	33300	38400	56400	67800	21400	292
1.3	1680	1.6	1023	–	**3/V 03 L3**	**–**	**BN 71B 4**	**M 1SD 4**	32900	38000	55800	67200	21100	268
1.4	1730	2.2	981	–	**3/V 04 L3**	**–**	**BN 71B 4**	**M 1SD 4**	32500	37500	55100	66300	20800	280
1.5	1670	1.6	923	–	**3/V 03 L3**	**–**	**BN 71B 4**	**M 1SD 4**	31800	36700	54100	65100	20400	268
1.5	1750	2.5	894	–	**3/V 05 L3**	**–**	**BN 71B 4**	**M 1SD 4**	31500	36300	53600	64500	20200	292
1.5	1840	1.5	887	–	**3/V 04 L3**	**–**	**BN 71B 4**	**M 1SD 4**	31400	36300	53500	64400	20100	280
1.7	1470	1.1	799	–	**3/V 01 L3**	**–**	**BN 71B 4**	**–**	9860	9860	25400	29200	6480	258
1.7	1440	1.5	793	–	**3/V 03 L3**	**–**	**BN 71B 4**	**M 1SD 4**	30200	34900	51700	62200	19400	268
1.7	1490	2.8	793	–	**3/V 05 L3**	**–**	**BN 71B 4**	**M 1SD 4**	30200	34900	51700	62200	19400	292
1.8	1510	2.2	769	–	**3/V 04 L3**	**–**	**BN 71B 4**	**M 1SD 4**	29900	34600	51300	61700	19200	280
1.9	1330	2.0	736	–	**3/V 03 L3**	**–**	**BN 71B 4**	**M 1SD 4**	29500	34100	50600	60800	18900	268
1.9	1730	1.0	731	–	**–**	**3/A 03 L2**	**BN 71B 4**	**–**	29400	34000	50500	60700	18900	269
1.9	1450	2.8	715	–	**3/V 05 L3**	**–**	**BN 71B 4**	**M 1SD 4**	29200	33700	50200	60300	18800	292
1.9	1480	1.8	710	–	**3/V 04 L3**	**–**	**BN 71B 4**	**M 1SD 4**	29200	33700	50000	60200	18700	280
2.0	1200	0.9	689	–	**3/V 00 L3**	**–**	**BN 71B 4**	**–**	9390	9390	24300	27900	6170	248
2.0	1200	1.4	689	–	**3/V 01 L3**	**–**	**BN 71B 4**	**–**	9390	9390	24300	27900	6170	258
2.1	1070	1.0	654	–	**3/V 00 L3**	**–**	**BN 71B 4**	**–**	9230	9230	23900	27500	6070	248
2.1	1070	1.1	654	–	**3/V 01 L3**	**–**	**BN 71B 4**	**–**	9230	9230	23900	27500	6070	258
2.2	1130	2.0	623	–	**3/V 03 L3**	**–**	**BN 71B 4**	**M 1SD 4**	27900	32200	48100	57900	17900	268
2.3	1430	1.3	605	–	**–**	**3/A 03 L2**	**BN 71B 4**	**–**	27600	31900	47700	57400	17700	269
2.3	1410	2.3	594	–	**–**	**3/A 05 L2**	**BN 71B 4**	**M 1SD 4**	27500	31700	47400	57100	17600	293
2.4	1360	1.3	574	–	**–**	**3/A 03 L2**	**BN 71B 4**	**M 1SD 4**	27200	31400	46900	56500	17400	269
2.4	1110	2.8	568	–	**3/V 04 L3**	**–**	**BN 71B 4**	**M 1SD 4**	27100	31300	46800	56300	17400	280
2.4	980	1.4	562	–	**3/V 01 L3**	**–**	**BN 71B 4**	**–**	8770	8770	22900	26300	5770	258
2.5	980	2.8	544	–	**3/V 03 L3**	**–**	**BN 71B 4**	**M 1SD 4**	26700	30800	46200	55600	17100	268
2.6	1230	2.0	520	–	**–**	**3/A 04 L2**	**BN 71B 4**	**M 1SD 4**	26300	30300	45600	54800	16900	281
2.7	880	1.2	509	–	**3/V 00 L3**	**–**	**BN 71B 4**	**–**	8490	8490	22200	25500	5580	248
2.7	880	1.4	509	–	**3/V 01 L3**	**–**	**BN 71B 4**	**–**	8490	8490	22200	25500	5580	258
2.7	1000	2.0	502	–	**3/V 03 L3**	**–**	**BN 71B 4**	**M 1SD 4**	26000	30000	45100	54300	16700	268
2.8	1170	1.5	495	–	**–**	**3/A 03 L2**	**BN 71B 4**	**M 1SD 4**	25900	29800	44900	54000	16600	269
2.9	1110	2.3	469	–	**–**	**3/A 04 L2**	**BN 71B 4**	**M 1SD 4**	25400	29300	44200	53100	16300	281
3.0	830	2.8	460	–	**3/V 03 L3**	**–**	**BN 71B 4**	**M 1SD 4**	25200	29100	43900	52900	16200	268
3.0	1080	1.1	454	–	**–**	**3/A 01 L2**	**BN 71B 4**	**M 1SD 4**	8170	8170	21400	24600	5370	259
3.1	840	1.6	443	–	**3/V 01 L3**	**–**	**BN 71B 4**	**–**	8100	8100	21300	24400	5330	258
3.1	710	1.0	436	–	**3/V 00 L3**	**–**	**BN 71B 4**	**–**	8060	8060	21200	24300	5300	248
3.2	850	2.2	430	–	**3/V 01 L3**	**–**	**BN 71B 4**	**–**	8020	8020	21100	24200	5270	258
3.3	720	1.4	415	–	**3/V 00 L3**	**–**	**BN 71B 4**	**–**	7930	7930	20900	24000	5210	248
3.3	970	2.0	409	–	**–**	**3/A 03 L2**	**BN 71B 4**	**M 1SD 4**	24300	28000	42400	51000	15600	269
3.5	780	2.8	395	–	**3/V 03 L3**	**–**	**BN 71B 4**	**M 1SD 4**	24000	27700	42000	50500	15400	268
3.5	920	2.7	386	–	**–**	**3/A 04 L2**	**BN 71B 4**	**M 1SD 4**	23800	27500	41700	50200	15300	281
3.8	860	1.6	364	–	**–**	**3/A 01 L2**	**BN 71B 4**	**M 1SD 4**	7590	7590	20100	23000	4990	259
3.9	830	2.4	352	–	**–**	**3/A 03 L2**	**BN 71B 4**	**M 1SD 4**	23100	26600	40500	48800	14800	269
3.9	830	2.9	349	–	**–**	**3/A 04 L2**	**BN 71B 4**	**M 1SD 4**	23000	26600	40400	48600	14800	281
4.2	770	2.2	326	–	**–**	**3/A 03 L2**	**BN 71B 4**	**M 1SD 4**	22500	26000	39600	47600	14400	269
4.4	740	1.6	311	–	**–**	**3/A 01 L2**	**BN 71B 4**	**M 1SD 4**	7200	7200	19100	22000	4740	259
4.6	700	0.9	296	–	**–**	**3/A 00 L2**	**BN 71B 4**	**M 1SD 4**	7080	7080	18900	21700	4660	249
5.1	640	2.9	269	–	**–**	**3/A 03 L2**	**BN 71B 4**	**M 1SD 4**	21100	24400	37400	45000	13500	269

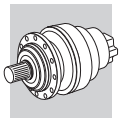

P_1 = 0.37 kW

n_2	M_{n2}	f_S	i	Pt					Rn_2 [N]					
min^{-1}	Nm			kW					MC/PC	MZ/PZ	HC	HZ	FZ	
5.1	640	2.9	269	–	**–**	**3/A 03 L2**	**BN 71B 4**	**M 1SD 4**	21100	24400	37400	45000	13500	269
5.1	640	1.6	269	–	**–**	**3/A 01 L2**	**BN 71B 4**	**M 1SD 4**	6860	6860	18300	21000	4510	259
5.4	600	1.9	255	–	**–**	**3/A 01 L2**	**BN 71B 4**	**M 1SD 4**	6740	6740	18000	20700	4430	259
5.4	600	0.9	253	–	**–**	**3/A 00 L2**	**BN 71B 4**	**M 1SD 4**	6720	6720	18000	20700	4420	249
6.2	520	1.6	220	–	**–**	**3/A 01 L2**	**BN 71B 4**	**M 1SD 4**	6410	6410	17200	19800	4220	259
6.3	520	1.2	219	–	**–**	**3/A 00 L2**	**BN 71B 4**	**M 1SD 4**	6400	6400	17200	19800	4210	249
6.7	485	2.7	204	–	**–**	**3/A 01 L2**	**BN 71B 4**	**M 1SD 4**	6260	6260	16900	19400	4120	259
6.8	480	1.4	203	–	**–**	**3/A 00 L2**	**BN 71B 4**	**M 1SD 4**	6240	6240	16800	19300	4100	249
7.4	435	2.4	184	–	**–**	**3/A 01 L2**	**BN 71B 4**	**M 1SD 4**	6050	6050	16400	18800	3980	259
8.0	405	1.4	171	–	**–**	**3/A 00 L2**	**BN 71B 4**	**M 1SD 4**	5900	5900	16000	18400	3880	249
8.2	395	2.9	166	–	**–**	**3/A 01 L2**	**BN 71B 4**	**M 1SD 4**	5850	5850	15900	18200	3840	259
10.2	315	1.7	134	–	**–**	**3/A 00 L2**	**BN 71B 4**	**M 1SD 4**	5440	5440	14900	17100	3580	249
12.8	255	2.6	107	–	**–**	**3/A 00 L2**	**BN 71B 4**	**M 1SD 4**	5050	5050	13900	16000	3320	249
13.7	235	2.3	100	–	**–**	**3/A 00 L2**	**BN 71B 4**	**M 1SD 4**	4940	4940	13600	15600	3240	249
15.5	210	2.6	88.6	–	**–**	**3/A 00 L2**	**BN 71B 4**	**M 1SD 4**	4740	4740	13100	15100	3120	249

P_1 = 0.55 kW

n_2	M_{n2}	f_S	i	Pt					Rn_2 [N]					
min^{-1}	Nm			kW					MC/PC	MZ/PZ	HC	HZ	FZ	
0.27	12900	2.7	5081	–	**3/V 10 L4**	**–**	**BN 80A 4**	**M 1LA 4**	–	–	133000	166000	65000	340
0.27	12900	2.7	5081	–	**3/V 10 L4**	**–**	**BN 80A 4**	**M 1LA 4**	–	–	133000	166000	65000	340
0.30	11700	2.6	4637	–	**3/V 10 L4**	**–**	**BN 80A 4**	**M 1LA 4**	–	–	133000	166000	65000	340
0.30	11700	2.6	4637	–	**3/V 10 L4**	**–**	**BN 80A 4**	**M 1LA 4**	–	–	133000	166000	65000	340
0.34	11800	2.6	4036	–	**3/V 10 L4**	**–**	**BN 80A 4**	**M 1LA 4**	–	–	133000	166000	65000	340
0.34	11800	2.6	4036	–	**3/V 10 L4**	**–**	**BN 80A 4**	**M 1LA 4**	–	–	133000	166000	65000	340
0.54	6750	1.0	2588	–	**3/V 06 L3**	**–**	**BN 80A 4**	**M 1LA 4**	45000	51000	101000	119000	35000	304
0.56	6190	1.8	2472	–	**3/V 07 L3**	**–**	**BN 80A 4**	**–**	52000	65000	109000	145000	45000	316
0.65	5690	1.9	2150	–	**3/V 07 L3**	**–**	**BN 80A 4**	**–**	52000	65000	109000	145000	45000	316
0.65	5580	1.5	2139	–	**3/V 06 L3**	**–**	**BN 80A 4**	**M 1LA 4**	45000	51000	101000	119000	35000	304
0.71	4910	2.5	1964	–	**3/V 07 L3**	**–**	**BN 80A 4**	**–**	52000	65000	109000	145000	45000	316
0.78	4600	1.0	1786	–	**3/V 05 L3**	**–**	**BN 80A 4**	**M 1LA 4**	36000	42000	64000	74000	24000	292
0.79	4620	1.9	1768	–	**3/V 06 L3**	**–**	**BN 80A 4**	**M 1LA 4**	45000	51000	101000	119000	35000	304
0.83	4610	1.0	1674	–	**3/V 05 L3**	**–**	**BN 80A 4**	**M 1LA 4**	36000	42000	64000	74000	24000	292
0.90	4200	2.6	1545	–	**3/V 07 L3**	**–**	**BN 80A 4**	**–**	52000	65000	109000	145000	45000	316
0.90	3950	0.9	1536	–	**3/V 04 L3**	**–**	**BN 80A 4**	**M 1LA 4**	36000	42000	63100	74000	24000	280
0.97	3680	1.3	1431	–	**3/V 05 L3**	**–**	**BN 80A 4**	**M 1LA 4**	36000	42000	61700	74000	23600	292
1.0	3790	2.2	1395	–	**3/V 06 L3**	**–**	**BN 80A 4**	**M 1LA 4**	45000	51000	100200	116700	34200	304
1.1	3170	1.1	1231	–	**3/V 04 L3**	**–**	**BN 80A 4**	**M 1LA 4**	35000	40400	59000	71000	22500	280
1.1	3170	1.7	1231	–	**3/V 05 L3**	**–**	**BN 80A 4**	**M 1LA 4**	35000	40400	59000	71000	22500	292
1.1	3160	2.5	1212	–	**3/V 06 L3**	**–**	**BN 80A 4**	**M 1LA 4**	43400	49200	96100	111900	32600	304
1.2	3130	2.6	1153	–	**3/V 06 L3**	**–**	**BN 80A 4**	**M 1LA 4**	42700	48400	94700	110200	32100	304
1.2	3170	1.1	1152	–	**3/V 04 L3**	**–**	**BN 80A 4**	**M 1LA 4**	34300	39600	57900	69600	22000	280
1.2	3190	1.4	1116	–	**3/V 05 L3**	**–**	**BN 80A 4**	**M 1LA 4**	33900	39100	57300	69000	21700	292
1.3	2720	1.6	1057	–	**3/V 05 L3**	**–**	**BN 80A 4**	**M 1LA 4**	33300	38400	56400	67800	21400	292
1.4	2450	1.1	1023	–	**3/V 03 L3**	**–**	**BN 80A 4**	**M 1LA 4**	32900	38000	55800	67200	21100	268
1.4	2520	1.5	981	–	**3/V 04 L3**	**–**	**BN 80A 4**	**M 1LA 4**	32500	37500	55100	66300	20800	280
1.5	2790	2.8	930	–	**3/V 06 L3**	**–**	**BN 80A 4**	**M 1LA 4**	39700	45000	88800	103400	29800	304
1.5	2440	1.1	923	–	**3/V 03 L3**	**–**	**BN 80A 4**	**M 1LA 4**	31800	36700	54100	65100	20400	268
1.6	2560	1.7	894	–	**3/V 05 L3**	**–**	**BN 80A 4**	**M 1LA 4**	31500	36300	53600	64500	20200	292
1.6	2700	1.0	887	–	**3/V 04 L3**	**–**	**BN 80A 4**	**M 1LA 4**	31400	36300	53500	64400	20100	280
1.8	2100	1.0	793	–	**3/V 03 L3**	**–**	**BN 80A 4**	**M 1LA 4**	30200	34900	51700	62200	19400	268
1.8	2180	1.9	793	–	**3/V 05 L3**	**–**	**BN 80A 4**	**M 1LA 4**	30200	34900	51700	62200	19400	292
1.8	2200	1.5	769	–	**3/V 04 L3**	**–**	**BN 80A 4**	**M 1LA 4**	29900	34600	51300	61700	19200	280
1.9	1950	1.4	736	–	**3/V 03 L3**	**–**	**BN 80A 4**	**M 1LA 4**	29500	34100	50600	60800	18900	268
1.9	2120	1.9	715	–	**3/V 05 L3**	**–**	**BN 80A 4**	**M 1LA 4**	29200	33700	50200	60300	18800	292
2.0	2160	1.2	710	–	**3/V 04 L3**	**–**	**BN 80A 4**	**M 1LA 4**	29200	33700	50000	60200	18700	280
2.0	1750	1.0	689	–	**3/V 01 L3**	**–**	**BN 80A 4**	**–**	9390	9390	24300	27900	6170	258
2.1	2250	2.7	671	–	**–**	**3/A 06 L2**	**BN 80A 4**	**M 1LA 4**	35600	40400	80500	93700	26800	305
2.2	1720	2.1	623	–	**3/V 04 L3**	**–**	**BN 80A 4**	**M 1LA 4**	27900	32200	48100	57900	17900	280
2.2	1650	1.3	623	–	**3/V 03 L3**	**–**	**BN 80A 4**	**M 1LA 4**	27900	32200	48100	57900	17900	268
2.2	1720	2.6	623	–	**3/V 05 L3**	**–**	**BN 80A 4**	**M 1LA 4**	27900	32200	48100	57900	17900	292

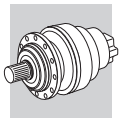

A

P_1 = 0.55 kW

n_2	M_{n2}	f_S	i	Pt					Rn_2 [N]					
min^{-1}	Nm			kW					MC/PC	MZ/PZ	HC	HZ	FZ	
2.3	2050	2.9	611	–	–	**3/A 06 L2**	**BN 80A 4**	**M 1LA 4**	34500	39100	78300	91100	25900	305
2.3	2060	1.6	594	–	–	**3/A 05 L2**	**BN 80A 4**	**M 1LA 4**	27500	31700	47400	57100	17600	293
2.4	1750	2.8	576	–	**3/V 05 L3**	–	**BN 80A 4**	**M 1LA 4**	27200	31400	47000	56500	17400	292
2.4	1630	1.9	568	–	**3/V 04 L3**	–	**BN 80A 4**	**M 1LA 4**	27100	31300	46800	56300	17400	280
2.5	1430	1.0	562	–	**3/V 01 L3**	–	**BN 80A 4**	–	8770	8770	22900	26300	5770	258
2.6	1440	1.9	544	–	**3/V 03 L3**	–	**BN 80A 4**	**M 1LA 4**	26700	30800	46200	55600	17100	268
2.6	1570	2.5	529	–	**3/V 05 L3**	–	**BN 80A 4**	**M 1LA 4**	26400	30500	45800	55100	17000	292
2.7	1800	1.4	520	–	–	**3/A 04 L2**	**BN 80A 4**	**M 1LA 4**	26300	30300	45600	54800	16900	281
2.7	1290	1.0	509	–	**3/V 01 L3**	–	**BN 80A 4**	–	8490	8490	22200	25500	5580	258
2.8	1450	1.4	502	–	**3/V 03 L3**	–	**BN 80A 4**	**M 1LA 4**	26000	30000	45100	54300	16700	268
2.8	1290	2.3	501	–	**3/V 04 L3**	–	**BN 80A 4**	**M 1LA 4**	26000	30000	45100	54200	16700	280
2.8	1720	1.0	495	–	–	**3/A 03 L2**	**BN 80A 4**	**M 1LA 4**	25900	29800	44900	54000	16600	269
2.8	1700	2.3	491	–	–	**3/A 05 L2**	**BN 80A 4**	**M 1LA 4**	25800	29800	44800	53900	16500	293
3.0	1620	1.5	469	–	–	**3/A 04 L2**	**BN 80A 4**	**M 1LA 4**	25400	29300	44200	53100	16300	281
3.0	1220	1.9	460	–	**3/V 03 L3**	–	**BN 80A 4**	**M 1LA 4**	25200	29100	43900	52900	16200	268
3.1	1300	2.9	453	–	**3/V 04 L3**	–	**BN 80A 4**	**M 1LA 4**	25100	29000	43700	52600	16100	280
3.1	1230	1.1	443	–	**3/V 01 L3**	–	**BN 80A 4**	–	8100	8100	21300	24400	5330	258
3.2	1240	1.5	430	–	**3/V 01 L3**	–	**BN 80A 4**	–	8020	8020	21100	24200	5270	258
3.3	1050	0.9	415	–	**3/V 00 L3**	–	**BN 80A 4**	–	7930	7930	20900	24000	5210	248
3.4	1420	1.4	409	–	–	**3/A 03 L2**	**BN 80A 4**	**M 1LA 4**	24300	28000	42400	51000	15600	269
3.5	1380	2.3	398	–	–	**3/A 05 L2**	**BN 80A 4**	**M 1LA 4**	24000	27800	42100	50600	15400	293
3.5	1140	1.9	395	–	**3/V 03 L3**	–	**BN 80A 4**	**M 1LA 4**	24000	27700	42000	50500	15400	268
3.6	1340	1.8	386	–	–	**3/A 04 L2**	**BN 80A 4**	**M 1LA 4**	23800	27500	41700	50200	15300	281
3.8	1260	1.1	364	–	–	**3/A 01 L2**	**BN 80A 4**	**M 1LA 4**	7590	7590	20100	23000	4990	259
3.9	1220	1.7	352	–	–	**3/A 03 L2**	**BN 80A 4**	**M 1LA 4**	23100	26600	40500	48800	14800	269
4.0	1210	2.0	349	–	–	**3/A 04 L2**	**BN 80A 4**	**M 1LA 4**	23000	26600	40400	48600	14800	281
4.3	1130	1.5	326	–	–	**3/A 03 L2**	**BN 80A 4**	**M 1LA 4**	22500	26000	39600	47600	14400	269
4.4	1100	2.2	317	–	–	**3/A 04 L2**	**BN 80A 4**	**M 1LA 4**	22300	25700	39300	47300	14300	281
4.5	1080	1.1	311	–	–	**3/A 01 L2**	**BN 80A 4**	**M 1LA 4**	7200	7200	19100	22000	4740	259
4.9	980	2.9	283	–	–	**3/A 04 L2**	**BN 80A 4**	**M 1LA 4**	21500	24800	38000	45700	13800	281
5.2	930	2.0	269	–	–	**3/A 03 L2**	**BN 80A 4**	**M 1LA 4**	21100	24400	37400	45000	13500	269
5.2	930	2.0	269	–	–	**3/A 03 L2**	**BN 80A 4**	**M 1LA 4**	21100	24400	37400	45000	13500	269
5.2	930	1.1	269	–	–	**3/A 01 L2**	**BN 80A 4**	**M 1LA 4**	6860	6860	18300	21000	4510	259
5.5	880	1.3	255	–	–	**3/A 01 L2**	**BN 80A 4**	**M 1LA 4**	6740	6740	18000	20700	4430	259
6.3	760	2.2	220	–	–	**3/A 03 L2**	**BN 80A 4**	**M 1LA 4**	19700	22800	35200	42300	12700	269
6.3	760	1.1	220	–	–	**3/A 01 L2**	**BN 80A 4**	**M 1LA 4**	6410	6410	17200	19800	4220	259
6.8	710	1.8	204	–	–	**3/A 01 L2**	**BN 80A 4**	**M 1LA 4**	6260	6260	16900	19400	4120	259
6.9	700	0.9	203	–	–	**3/A 00 L2**	**BN 80A 4**	**M 1LA 4**	6240	6240	16800	19300	4100	249
7.5	640	1.6	184	–	–	**3/A 01 L2**	**BN 80A 4**	**M 1LA 4**	6050	6050	16400	18800	3980	259
7.7	630	2.9	182	–	–	**3/A 03 L2**	**BN 80A 4**	**M 1LA 4**	18500	21400	33200	40000	11900	269
8.1	590	0.9	171	–	–	**3/A 00 L2**	**BN 80A 4**	**M 1LA 4**	5900	5900	16000	18400	3880	249
8.4	580	2.0	166	–	–	**3/A 01 L2**	**BN 80A 4**	**M 1LA 4**	5850	5850	15900	18200	3840	259
10.4	465	1.2	134	–	–	**3/A 00 L2**	**BN 80A 4**	**M 1LA 4**	5440	5440	14900	17100	3580	249
10.4	460	2.8	133	–	–	**3/A 01 L2**	**BN 80A 4**	**M 1LA 4**	5430	5430	14800	17100	3570	259
13.0	370	1.7	107	–	–	**3/A 00 L2**	**BN 80A 4**	**M 1LA 4**	5050	5050	13900	16000	3320	249
13.9	345	1.6	100	–	–	**3/A 00 L2**	**BN 80A 4**	**M 1LA 4**	4940	4940	13600	15600	3240	249
15.7	305	1.8	88.6	–	–	**3/A 00 L2**	**BN 80A 4**	**M 1LA 4**	4740	4740	13100	15100	3120	249
17.3	280	2.3	80.2	–	–	**3/A 00 L2**	**BN 80A 4**	**M 1LA 4**	4580	4580	12700	14600	3010	249
19.6	245	2.6	71.0	–	–	**3/A 00 L2**	**BN 80A 4**	**M 1LA 4**	4400	4400	12300	14100	2890	249

P_1 = 0.75 kW

n_2	M_{n2}	f_S	i	Pt					Rn_2 [N]					
min^{-1}	Nm			kW					MC/PC	MZ/PZ	HC	HZ	FZ	
0.28	17300	2.0	5081	–	**3/V 10 L4**	–	**BN 80B 4**	–	–	–	133000	166000	65000	340
0.28	17300	2.0	5081	–	**3/V 10 L4**	–	**BN 80B 4**	–	–	–	133000	166000	65000	340
0.28	17800	2.7	5021	–	**3/V 11 L4**	–	**BN 80B 4**	–	–	–	157000	195000	65000	352
0.30	15800	1.9	4637	–	**3/V 10 L4**	–	**BN 80B 4**	–	–	–	133000	166000	65000	340
0.30	15800	1.9	4637	–	**3/V 10 L4**	–	**BN 80B 4**	–	–	–	133000	166000	65000	340
0.32	15800	2.9	4410	–	**3/V 11 L4**	–	**BN 80B 4**	–	–	–	157000	195000	65000	352
0.35	15800	1.9	4036	–	**3/V 10 L4**	–	**BN 80B 4**	–	–	–	133000	166000	65000	340
0.35	15800	1.9	4036	–	**3/V 10 L4**	–	**BN 80B 4**	–	–	–	133000	166000	65000	340

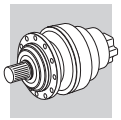

P_1 = 0.75 kW

n_2 min^{-1}	M_{n2} Nm	f_S	i	Pt kW					Rn_2 [N] MC/PC	MZ/PZ	HC	HZ	FZ	
0.39	12600	2.4	3570	–	**3/V 10 L4**	**–**	**BN 80B 4**	**–**	–	–	133000	166000	65000	340
0.39	12600	2.4	3570	–	**3/V 10 L4**	**–**	**BN 80B 4**	**–**	–	–	133000	166000	65000	340
0.43	12800	2.7	3273	–	**3/V 10 L4**	**–**	**BN 80B 4**	**–**	–	–	133000	166000	65000	340
0.43	12800	2.7	3273	–	**3/V 10 L4**	**–**	**BN 80B 4**	**–**	–	–	133000	166000	65000	340
0.49	11100	2.8	2835	–	**3/V 10 L4**	**–**	**BN 80B 4**	**–**	–	–	133000	166000	65000	340
0.49	11100	2.8	2835	–	**3/V 10 L4**	**–**	**BN 80B 4**	**–**	–	–	133000	166000	65000	340
0.57	8300	1.3	2472	–	**3/V 07 L3**	**–**	**BN 80B 4**	**–**	52000	65000	109000	145000	45000	316
0.65	7630	1.4	2150	–	**3/V 07 L3**	**–**	**BN 80B 4**	**–**	52000	65000	109000	145000	45000	316
0.65	7490	1.1	2139	–	**3/V 06 L3**	**–**	**BN 80B 4**	**–**	45000	51000	101000	119000	35000	304
0.71	6600	1.9	1964	–	**3/V 07 L3**	**–**	**BN 80B 4**	**–**	52000	65000	109000	145000	45000	316
0.79	6190	1.4	1768	–	**3/V 06 L3**	**–**	**BN 80B 4**	**–**	45000	51000	101000	119000	35000	304
0.91	5640	2.0	1545	–	**3/V 07 L3**	**–**	**BN 80B 4**	**–**	52000	65000	109000	145000	45000	316
0.98	4940	0.9	1431	–	**3/V 05 L3**	**–**	**BN 80B 4**	**–**	36000	42000	61700	74000	23600	292
0.99	5010	2.5	1411	–	**3/V 07 L3**	**–**	**BN 80B 4**	**–**	50700	63600	108200	141800	44100	316
1.0	5090	1.7	1395	–	**3/V 06 L3**	**–**	**BN 80B 4**	**–**	45000	51000	100200	116700	34200	304
1.1	4250	1.3	1231	–	**3/V 05 L3**	**–**	**BN 80B 4**	**–**	35000	40400	59000	71000	22500	292
1.2	4250	1.8	1212	–	**3/V 06 L3**	**–**	**BN 80B 4**	**–**	43400	49200	96100	111900	32600	304
1.2	4280	2.5	1159	–	**3/V 07 L3**	**–**	**BN 80B 4**	**–**	47500	59600	102000	133700	41300	316
1.2	4210	2.0	1153	–	**3/V 06 L3**	**–**	**BN 80B 4**	**–**	42700	48400	94700	110200	32100	304
1.3	4280	1.0	1116	–	**3/V 05 L3**	**–**	**BN 80B 4**	**–**	33900	39100	57300	69000	21700	292
1.3	3650	1.2	1057	–	**3/V 05 L3**	**–**	**BN 80B 4**	**–**	33300	38400	56400	67800	21400	292
1.4	3620	2.6	992	–	**3/V 06 L3**	**–**	**BN 80B 4**	**–**	40600	46000	90500	105400	30500	304
1.4	3390	1.1	981	–	**3/V 04 L3**	**–**	**BN 80B 4**	**–**	32500	37500	55100	66300	20800	280
1.5	3750	2.1	930	–	**3/V 06 L3**	**–**	**BN 80B 4**	**–**	39700	45000	88800	103400	29800	304
1.6	3430	1.2	894	–	**3/V 05 L3**	**–**	**BN 80B 4**	**–**	31500	36300	53600	64500	20200	292
1.8	2930	1.4	793	–	**3/V 05 L3**	**–**	**BN 80B 4**	**–**	30200	34900	51700	62200	19400	292
1.8	2880	2.7	791	–	**3/V 06 L3**	**–**	**BN 80B 4**	**–**	37600	42600	84500	98400	28300	304
1.8	2950	1.1	769	–	**3/V 04 L3**	**–**	**BN 80B 4**	**–**	29900	34600	51300	61700	19200	280
1.9	2610	1.0	736	–	**3/V 03 L3**	**–**	**BN 80B 4**	**–**	29500	34100	50600	60800	18900	268
2.0	2850	1.4	715	–	**3/V 05 L3**	**–**	**BN 80B 4**	**–**	29200	33700	50200	60300	18800	292
2.0	2890	0.9	710	–	**3/V 04 L3**	**–**	**BN 80B 4**	**–**	29200	33700	50000	60200	18700	280
2.0	2840	2.7	698	–	**3/V 06 L3**	**–**	**BN 80B 4**	**–**	36100	40900	81400	94800	27100	304
2.1	3020	2.0	671	–	**–**	**3/A 06 L2**	**BN 80B 4**	**M 2SA 4**	35600	40400	80500	93700	26800	305
2.2	2300	1.5	623	–	**3/V 04 L3**	**–**	**BN 80B 4**	**–**	27900	32200	48100	57900	17900	280
2.2	2210	1.0	623	–	**3/V 03 L3**	**–**	**BN 80B 4**	**–**	27900	32200	48100	57900	17900	268
2.2	2300	1.9	623	–	**3/V 05 L3**	**–**	**BN 80B 4**	**–**	27900	32200	48100	57900	17900	292
2.3	2750	2.2	611	–	**–**	**3/A 06 L2**	**BN 80B 4**	**M 2SA 4**	34500	39100	78300	91100	25900	305
2.4	2760	1.2	594	–	**–**	**3/A 05 L2**	**BN 80B 4**	**M 2SA 4**	27500	31700	47400	57100	17600	293
2.4	2350	2.1	576	–	**3/V 05 L3**	**–**	**BN 80B 4**	**–**	27200	31400	47000	56500	17400	292
2.5	2180	1.4	568	–	**3/V 04 L3**	**–**	**BN 80B 4**	**–**	27100	31300	46800	56300	17400	280
2.5	2500	2.9	555	–	**–**	**3/A 06 L2**	**BN 80B 4**	**M 2SA 4**	33400	37900	76000	88500	25100	305
2.6	1930	1.4	544	–	**3/V 03 L3**	**–**	**BN 80B 4**	**–**	26700	30800	46200	55600	17100	268
2.6	2110	1.9	529	–	**3/V 05 L3**	**–**	**BN 80B 4**	**–**	26400	30500	45800	55100	17000	292
2.7	2420	1.0	520	–	**–**	**3/A 04 L2**	**BN 80B 4**	**M 2SA 4**	26300	30300	45600	54800	16900	281
2.8	1950	1.0	502	–	**3/V 03 L3**	**–**	**BN 80B 4**	**–**	26000	30000	45100	54300	16700	268
2.8	1730	1.7	501	–	**3/V 04 L3**	**–**	**BN 80B 4**	**–**	26000	30000	45100	54200	16700	280
2.9	2280	1.7	491	–	**–**	**3/A 05 L2**	**BN 80B 4**	**M 2SA 4**	25800	29800	44800	53900	16500	293
3.0	2180	1.1	469	–	**–**	**3/A 04 L2**	**BN 80B 4**	**M 2SA 4**	25400	29300	44200	53100	16300	281
3.0	1880	2.6	462	–	**3/V 05 L3**	**–**	**BN 80B 4**	**–**	25300	29200	44000	52900	16200	292
3.0	1630	1.4	460	–	**3/V 03 L3**	**–**	**BN 80B 4**	**–**	25200	29100	43900	52900	16200	268
3.1	1740	2.1	453	–	**3/V 04 L3**	**–**	**BN 80B 4**	**–**	25100	29000	43700	52600	16100	280
3.3	1670	1.1	430	–	**3/V 01 L3**	**–**	**BN 80B 4**	**–**	8020	8020	21100	24200	5270	258
3.3	1960	2.2	422	–	**–**	**3/A 05 L2**	**BN 80B 4**	**M 2SA 4**	24500	28300	42800	51500	15700	293
3.4	1900	1.0	409	–	**–**	**3/A 03 L2**	**BN 80B 4**	**M 2SA 4**	24300	28000	42400	51000	15600	269
3.5	1850	1.7	398	–	**–**	**3/A 05 L2**	**BN 80B 4**	**M 2SA 4**	24000	27800	42100	50600	15400	293
3.5	1620	2.3	396	–	**3/V 05 L3**	**–**	**BN 80B 4**	**–**	24000	27700	42000	50500	15400	292
3.5	1530	1.4	395	–	**3/V 03 L3**	**–**	**BN 80B 4**	**–**	24000	27700	42000	50500	15400	268
3.6	1800	1.4	386	–	**–**	**3/A 04 L2**	**BN 80B 4**	**M 2SA 4**	23800	27500	41700	50200	15300	281
3.6	1470	2.4	384	–	**3/V 04 L3**	**–**	**BN 80B 4**	**–**	23700	27400	41600	50100	15200	280
4.0	1640	1.2	352	–	**–**	**3/A 03 L2**	**BN 80B 4**	**M 2SA 4**	23100	26600	40500	48800	14800	269
4.0	1620	1.5	349	–	**–**	**3/A 04 L2**	**BN 80B 4**	**M 2SA 4**	23000	26600	40400	48600	14800	281
4.3	1530	2.4	329	–	**–**	**3/A 05 L2**	**BN 80B 4**	**M 2SA 4**	22600	26100	39700	47800	14500	293
4.3	1510	1.1	326	–	**–**	**3/A 03 L2**	**BN 80B 4**	**M 2SA 4**	22500	26000	39600	47600	14400	269
4.4	1480	1.6	317	–	**–**	**3/A 04 L2**	**BN 80B 4**	**M 2SA 4**	22300	25700	39300	47300	14300	281
4.9	1320	2.2	283	–	**–**	**3/A 04 L2**	**BN 80B 4**	**M 2SA 4**	21500	24800	38000	45700	13800	281

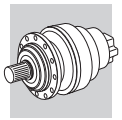

A

P_1 = 0.75 kW

n_2	M_{n2}	f_S	i	Pt					Rn_2 [N]					
min^{-1}	Nm			kW					MC/PC	MZ/PZ	HC	HZ	FZ	
5.0	1300	2.8	280	–	–	**3/A 05 L2**	**BN 80B 4**	**M 2SA 4**	21400	24700	37800	45500	13700	293
5.2	1250	1.5	269	–	–	**3/A 03 L2**	**BN 80B 4**	**M 2SA 4**	21100	24400	37400	45000	13500	269
5.2	1250	1.5	269	–	–	**3/A 03 L2**	**BN 80B 4**	**M 2SA 4**	21100	24400	37400	45000	13500	269
5.5	1190	1.0	255	–	–	**3/A 01 L2**	**BN 80B 4**	**M 2SA 4**	6740	6740	18000	20700	4430	259
6.4	1020	1.6	220	–	–	**3/A 03 L2**	**BN 80B 4**	**M 2SA 4**	19700	22800	35200	42300	12700	269
6.9	950	1.4	204	–	–	**3/A 01 L2**	**BN 80B 4**	**M 2SA 4**	6260	6260	16900	19400	4120	259
7.6	860	1.2	184	–	–	**3/A 01 L2**	**BN 80B 4**	**M 2SA 4**	6050	6050	16400	18800	3980	259
7.7	840	2.2	182	–	–	**3/A 03 L2**	**BN 80B 4**	**M 2SA 4**	18500	21400	33200	40000	11900	269
8.4	770	1.5	166	–	–	**3/A 01 L2**	**BN 80B 4**	**M 2SA 4**	5850	5850	15900	18200	3840	259
10.5	620	2.1	133	–	–	**3/A 01 L2**	**BN 80B 4**	**M 2SA 4**	5430	5430	14800	17100	3570	259
13.0	500	1.3	107	–	–	**3/A 00 L2**	**BN 80B 4**	**M 2SA 4**	5050	5050	13900	16000	3320	249
13.8	470	2.4	102	–	–	**3/A 01 L2**	**BN 80B 4**	**M 2SA 4**	4960	4960	13700	15700	3260	259
14.0	465	1.2	100	–	–	**3/A 00 L2**	**BN 80B 4**	**M 2SA 4**	4940	4940	13600	15600	3240	249
15.8	410	1.3	88.6	–	–	**3/A 00 L2**	**BN 80B 4**	**M 2SA 4**	4740	4740	13100	15100	3120	249
17.5	375	1.7	80.2	–	–	**3/A 00 L2**	**BN 80B 4**	**M 2SA 4**	4580	4580	12700	14600	3010	249
19.7	330	2.0	71.0	–	–	**3/A 00 L2**	**BN 80B 4**	**M 2SA 4**	4400	4400	12300	14100	2890	249
22.9	285	2.3	61.2	–	–	**3/A 00 L2**	**BN 80B 4**	**M 2SA 4**	4190	4190	11700	13500	2750	249
27.0	240	2.3	51.8	–	–	**3/A 00 L2**	**BN 80B 4**	**M 2SA 4**	3960	3960	11200	12800	2610	249
35	185	3.0	39.6	–	–	**3/A 00 L2**	**BN 80B 4**	**M 2SA 4**	3620	3620	10300	11800	2380	249

P_1 = 1.1 kW

n_2	M_{n2}	f_S	i	Pt					Rn_2 [N]					
min^{-1}	Nm			kW					MC/PC	MZ/PZ	HC	HZ	FZ	
0.28	25400	1.3	5081	–	**3/V 10 L4**	–	**BN 90S 4**	–	–	–	133000	166000	65000	340
0.28	25400	1.3	5081	–	**3/V 10 L4**	–	**BN 90S 4**	–	–	–	133000	166000	65000	340
0.28	25600	2.1	5046	–	**3/V 13 L4**	–	**BN 90S 4**	–	–	–	192000	231000	80000	364
0.28	26100	1.8	5021	–	**3/V 11 L4**	–	**BN 90S 4**	–	–	–	157000	195000	65000	352
0.30	23200	1.3	4637	–	**3/V 10 L4**	–	**BN 90S 4**	–	–	–	133000	166000	65000	340
0.30	23200	1.3	4637	–	**3/V 10 L4**	–	**BN 90S 4**	–	–	–	133000	166000	65000	340
0.31	23900	2.4	4536	–	**3/V 13 L4**	–	**BN 90S 4**	–	–	–	192000	231000	80000	364
0.32	23200	1.9	4410	–	**3/V 11 L4**	–	**BN 90S 4**	–	–	–	157000	195000	65000	352
0.34	20800	2.3	4106	–	**3/V 11 L4**	–	**BN 90S 4**	–	–	–	157000	195000	65000	352
0.35	21300	2.6	4046	–	**3/V 13 L4**	–	**BN 90S 4**	–	–	–	192000	231000	80000	364
0.35	23200	1.3	4036	–	**3/V 10 L4**	–	**BN 90S 4**	–	–	–	133000	166000	65000	340
0.35	23200	1.3	4036	–	**3/V 10 L4**	–	**BN 90S 4**	–	–	–	133000	166000	65000	340
0.39	18600	1.6	3570	–	**3/V 10 L4**	–	**BN 90S 4**	–	–	–	133000	166000	65000	340
0.39	18600	1.6	3570	–	**3/V 10 L4**	–	**BN 90S 4**	–	–	–	133000	166000	65000	340
0.39	18000	2.3	3557	–	**3/V 11 L4**	–	**BN 90S 4**	–	–	–	157000	195000	65000	352
0.40	20200	2.9	3515	–	**3/V 13 L4**	–	**BN 90S 4**	–	–	–	192000	231000	80000	364
0.43	18800	1.8	3273	–	**3/V 10 L4**	–	**BN 90S 4**	–	–	–	133000	166000	65000	340
0.43	18800	1.8	3273	–	**3/V 10 L4**	–	**BN 90S 4**	–	–	–	133000	166000	65000	340
0.43	18800	3.0	3263	–	**3/V 13 L4**	–	**BN 90S 4**	–	–	–	192000	231000	80000	364
0.43	18500	2.5	3222	–	**3/V 11 L4**	–	**BN 90S 4**	–	–	–	157000	195000	65000	352
0.48	16400	2.9	2887	–	**3/V 11 L4**	–	**BN 90S 4**	–	–	–	157000	195000	65000	352
0.49	16300	1.9	2835	–	**3/V 10 L4**	–	**BN 90S 4**	–	–	–	133000	166000	65000	340
0.49	16300	1.9	2835	–	**3/V 10 L4**	–	**BN 90S 4**	–	–	–	133000	166000	65000	340
0.57	12200	0.9	2472	–	**3/V 07 L3**	–	**BN 90S 4**	–	52000	65000	109000	145000	45000	316
0.57	14300	2.4	2455	–	**3/V 10 L4**	–	**BN 90S 4**	–	–	–	133000	166000	65000	340
0.57	14300	2.4	2455	–	**3/V 10 L4**	–	**BN 90S 4**	–	–	–	133000	166000	65000	340
0.63	12700	2.5	2209	–	**3/V 10 L4**	–	**BN 90S 4**	–	–	–	133000	166000	65000	340
0.63	12700	2.5	2209	–	**3/V 10 L4**	–	**BN 90S 4**	–	–	–	133000	166000	65000	340
0.65	11200	1.0	2150	–	**3/V 07 L3**	–	**BN 90S 4**	–	52000	65000	109000	145000	45000	316
0.69	11600	2.5	2016	–	**3/V 10 L4**	–	**BN 90S 4**	–	–	–	133000	166000	65000	340
0.69	11600	2.5	2016	–	**3/V 10 L4**	–	**BN 90S 4**	–	–	–	133000	166000	65000	340
0.71	9700	1.3	1964	–	**3/V 07 L3**	–	**BN 90S 4**	–	52000	65000	109000	145000	45000	316
0.77	10500	2.5	1826	–	**3/V 10 L4**	–	**BN 90S 4**	–	–	–	133000	166000	65000	340
0.77	10500	2.5	1826	–	**3/V 10 L4**	–	**BN 90S 4**	–	–	–	133000	166000	65000	340
0.79	9110	0.9	1768	–	**3/V 06 L3**	–	**BN 90S 4**	–	45000	51000	101000	119000	35000	304
0.91	8290	1.3	1545	–	**3/V 07 L3**	–	**BN 90S 4**	–	52000	65000	109000	145000	45000	316
0.99	7370	1.7	1411	–	**3/V 07 L3**	–	**BN 90S 4**	–	50700	63600	108200	141800	44100	316
1.0	7480	1.1	1395	–	**3/V 06 L3**	–	**BN 90S 4**	–	45000	51000	100200	116700	34200	304

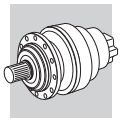

P_1 = 1.1 kW

n_2	M_{n2}	f_S	i	Pt					Rn_2 [N]					
min^{-1}	Nm			kW					MC/PC	MZ/PZ	HC	HZ	FZ	
1.1	6730	2.2	1288	–	**3/V 07 L3**	**–**	**BN 90S 4**	**–**	49200	61700	105300	138000	42800	316
1.2	6240	1.3	1212	–	**3/V 06 L3**	**–**	**BN 90S 4**	**–**	43400	49200	96100	111900	32600	304
1.2	6300	1.7	1159	–	**3/V 07 L3**	**–**	**BN 90S 4**	**–**	47500	59600	102000	133700	41300	316
1.2	6180	1.3	1153	–	**3/V 06 L3**	**–**	**BN 90S 4**	**–**	42700	48400	94700	110200	32100	304
1.4	5440	2.6	1015	–	**3/V 07 L3**	**–**	**BN 90S 4**	**–**	45400	57000	98000	128400	39500	316
1.4	5320	1.8	992	–	**3/V 06 L3**	**–**	**BN 90S 4**	**–**	40600	46000	90500	105400	30500	304
1.5	5510	1.4	930	–	**3/V 06 L3**	**–**	**BN 90S 4**	**–**	39700	45000	88800	103400	29800	304
1.5	5000	2.5	920	–	**3/V 07 L3**	**–**	**BN 90S 4**	**–**	44000	55200	95200	124700	38200	316
1.8	4310	1.0	793	–	**3/V 05 L3**	**–**	**BN 90S 4**	**–**	30200	34900	51700	62200	19400	292
1.8	4240	1.8	791	–	**3/V 06 L3**	**–**	**BN 90S 4**	**–**	37600	42600	84500	98400	28300	304
1.8	4580	2.2	773	–	**3/V 07 L3**	**–**	**BN 90S 4**	**–**	41500	52100	90300	118400	36100	316
2.0	4190	1.0	715	–	**3/V 05 L3**	**–**	**BN 90S 4**	**–**	29200	33700	50200	60300	18800	292
2.0	4180	1.8	698	–	**3/V 06 L3**	**–**	**BN 90S 4**	**–**	36100	40900	81400	94800	27100	304
2.1	4440	1.4	671	–	**–**	**3/A 06 L2**	**BN 90S 4**	**M 2SB 4**	35600	40400	80500	93700	26800	305
2.1	3920	2.4	661	–	**3/V 06 L3**	**–**	**BN 90S 4**	**–**	35500	40200	80100	93300	26600	304
2.2	3390	1.0	623	–	**3/V 04 L3**	**–**	**BN 90S 4**	**–**	27900	32200	48100	57900	17900	280
2.2	3390	1.3	623	–	**3/V 05 L3**	**–**	**BN 90S 4**	**–**	27900	32200	48100	57900	17900	292
2.3	4050	1.5	611	–	**–**	**3/A 06 L2**	**BN 90S 4**	**M 2SB 4**	34500	39100	78300	91100	25900	305
2.4	3450	1.4	576	–	**3/V 05 L3**	**–**	**BN 90S 4**	**–**	27200	31400	47000	56500	17400	292
2.5	3370	2.5	569	–	**3/V 06 L3**	**–**	**BN 90S 4**	**–**	33700	38200	76600	89200	25300	304
2.5	3210	1.0	568	–	**3/V 04 L3**	**–**	**BN 90S 4**	**–**	27100	31300	46800	56300	17400	280
2.5	3670	2.0	555	–	**–**	**3/A 06 L2**	**BN 90S 4**	**M 2SB 4**	33400	37900	76000	88500	25100	305
2.6	2840	1.0	544	–	**3/V 03 L3**	**–**	**BN 90S 4**	**–**	26700	30800	46200	55600	17100	268
2.6	3100	1.3	529	–	**3/V 05 L3**	**–**	**BN 90S 4**	**–**	26400	30500	45800	55100	17000	292
2.7	3120	2.4	527	–	**3/V 06 L3**	**–**	**BN 90S 4**	**–**	32900	37200	74900	87200	24700	304
2.8	3350	2.1	505	–	**–**	**3/A 06 L2**	**BN 90S 4**	**M 2SB 4**	32400	36700	73900	86100	24400	305
2.8	2550	1.2	501	–	**3/V 04 L3**	**–**	**BN 90S 4**	**–**	26000	30000	45100	54200	16700	280
2.9	3360	1.2	491	–	**–**	**3/A 05 L2**	**BN 90S 4**	**M 2SB 4**	25800	29800	44800	53900	16500	293
3.0	2770	1.7	462	–	**3/V 05 L3**	**–**	**BN 90S 4**	**–**	25300	29200	44000	52900	16200	292
3.0	2400	1.0	460	–	**3/V 03 L3**	**–**	**BN 90S 4**	**–**	25200	29100	43900	52900	16200	268
3.1	2560	1.5	453	–	**3/V 04 L3**	**–**	**BN 90S 4**	**–**	25100	29000	43700	52600	16100	280
3.2	2880	2.7	435	–	**–**	**3/A 06 L2**	**BN 90S 4**	**M 2SB 4**	30800	34900	70600	82300	23200	305
3.3	2890	1.5	422	–	**–**	**3/A 05 L2**	**BN 90S 4**	**M 2SB 4**	24500	28300	42800	51500	15700	293
3.5	2720	1.2	398	–	**–**	**3/A 05 L2**	**BN 90S 4**	**M 2SB 4**	24000	27800	42100	50600	15400	293
3.5	2380	1.6	396	–	**3/V 05 L3**	**–**	**BN 90S 4**	**–**	24000	27700	42000	50500	15400	292
3.5	2260	1.0	395	–	**3/V 03 L3**	**–**	**BN 90S 4**	**–**	24000	27700	42000	50500	15400	268
3.6	2570	2.2	388	–	**–**	**3/A 06 L2**	**BN 90S 4**	**M 2SB 4**	29700	33600	68300	79500	22300	305
3.6	2640	0.9	386	–	**–**	**3/A 04 L2**	**BN 90S 4**	**M 2SB 4**	23800	27500	41700	50200	15300	281
3.6	2170	1.6	384	–	**3/V 04 L3**	**–**	**BN 90S 4**	**–**	23700	27400	41600	50100	15200	280
3.7	2520	2.5	380	–	**–**	**3/A 06 L2**	**BN 90S 4**	**M 2SB 4**	29500	33400	67900	79000	22200	305
4.0	2390	1.0	349	–	**–**	**3/A 04 L2**	**BN 90S 4**	**M 2SB 4**	23000	26600	40400	48600	14800	281
4.3	2250	1.6	329	–	**–**	**3/A 05 L2**	**BN 90S 4**	**M 2SB 4**	22600	26100	39700	47800	14500	293
4.4	2170	1.1	317	–	**–**	**3/A 04 L2**	**BN 90S 4**	**M 2SB 4**	22300	25700	39300	47300	14300	281
4.9	1940	1.5	283	–	**–**	**3/A 04 L2**	**BN 90S 4**	**M 2SB 4**	21500	24800	38000	45700	13800	281
5.0	1910	1.9	280	–	**–**	**3/A 05 L2**	**BN 90S 4**	**M 2SB 4**	21400	24700	37800	45500	13700	293
5.2	1840	1.0	269	–	**–**	**3/A 03 L2**	**BN 90S 4**	**M 2SB 4**	21100	24400	37400	45000	13500	269
5.2	1840	1.0	269	–	**–**	**3/A 03 L2**	**BN 90S 4**	**M 2SB 4**	21100	24400	37400	45000	13500	269
5.6	1710	2.0	250	–	**–**	**3/A 04 L2**	**BN 90S 4**	**M 2SB 4**	20600	23800	36600	44000	13200	281
5.8	1640	2.6	241	–	**–**	**3/A 05 L2**	**BN 90S 4**	**M 2SB 4**	20300	23500	36200	43500	13000	293
6.2	1540	2.3	226	–	**–**	**3/A 04 L2**	**BN 90S 4**	**M 2SB 4**	19900	23000	35500	42700	12800	281
6.4	1500	1.1	220	–	**–**	**3/A 03 L2**	**BN 90S 4**	**M 2SB 4**	19700	22800	35200	42300	12700	269
6.6	1450	2.1	212	–	**–**	**3/A 05 L2**	**BN 90S 4**	**M 2SB 4**	19500	22500	34800	41900	12500	293
6.6	1450	2.1	212	–	**–**	**3/A 05 L2**	**BN 90S 4**	**M 2SB 4**	19500	22500	34800	41900	12500	293
6.8	1400	2.5	205	–	**–**	**3/A 04 L2**	**BN 90S 4**	**M 2SB 4**	19300	22300	34500	41500	12400	281
6.9	1400	0.9	204	–	**–**	**3/A 01 L2**	**BN 90S 4**	**M 2SB 4**	6260	6260	16900	19400	4120	259
7.7	1240	1.5	182	–	**–**	**3/A 03 L2**	**BN 90S 4**	**M 2SB 4**	18500	21400	33200	40000	11900	269
8.1	1190	2.5	174	–	**–**	**3/A 04 L2**	**BN 90S 4**	**M 2SB 4**	18200	21100	32800	39500	11700	281
8.4	1140	1.0	166	–	**–**	**3/A 01 L2**	**BN 90S 4**	**M 2SB 4**	5850	5850	15900	18200	3840	259
8.6	1110	2.6	162	–	**–**	**3/A 04 L2**	**BN 90S 4**	**M 2SB 4**	17800	20600	32100	38700	11400	281
8.6	1110	2.6	162	–	**–**	**3/A 05 L2**	**BN 90S 4**	**M 2SB 4**	17800	20600	32100	38700	11400	293
9.4	1020	2.3	149	–	**–**	**3/A 04 L2**	**BN 90S 4**	**M 2SB 4**	17300	20000	31300	37700	11100	281
10.5	910	1.4	133	–	**–**	**3/A 01 L2**	**BN 90S 4**	**M 2SB 4**	5430	5430	14800	17100	3570	259
12.0	800	3.0	117	–	**–**	**3/A 04 L2**	**BN 90S 4**	**M 2SB 4**	16000	18500	29100	35000	10300	281
13.8	690	1.7	102	–	**–**	**3/A 01 L2**	**BN 90S 4**	**M 2SB 4**	4960	4960	13700	15700	3260	259
14.4	660	2.6	96.9	–	**–**	**3/A 03 L2**	**BN 90S 4**	**M 2SB 4**	15000	17300	27500	33100	9630	269

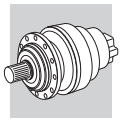

A

P_1 = 1.1 kW

n_2	M_{n2}	f_S	i	Pt					Rn_2 [N]					
min^{-1}	Nm			kW					MC/PC	MZ/PZ	HC	HZ	FZ	
15.8	610	0.9	88.6	–	**–**	**3/A 00 L2**	**BN 90S 4**	**M 2SB 4**	4740	4740	13100	15100	3120	249
15.8	610	2.7	88.5	–	**–**	**3/A 03 L2**	**BN 90S 4**	**M 2SB 4**	14600	16800	26800	32200	9340	269
17.2	560	2.3	81.3	–	**–**	**3/A 01 L2**	**BN 90S 4**	**M 2SB 4**	4610	4610	12800	14700	3030	259
17.5	550	1.2	80.2	–	**–**	**3/A 00 L2**	**BN 90S 4**	**M 2SB 4**	4580	4580	12700	14600	3010	249
18.9	510	2.3	74.2	–	**–**	**3/A 01 L2**	**BN 90S 4**	**M 2SB 4**	4470	4470	12400	14300	2940	259
19.7	485	1.3	71.0	–	**–**	**3/A 00 L2**	**BN 90S 4**	**M 2SB 4**	4400	4400	12300	14100	2890	249
22.9	420	1.6	61.2	–	**–**	**3/A 00 L2**	**BN 90S 4**	**M 2SB 4**	4190	4190	11700	13500	2750	249
27.0	355	1.6	51.8	–	**–**	**3/A 00 L2**	**BN 90S 4**	**M 2SB 4**	3960	3960	11200	12800	2610	249
28.5	335	2.5	49.1	–	**–**	**3/A 01 L2**	**BN 90S 4**	**M 2SB 4**	3890	3890	11000	12600	2560	259
34	285	2.3	41.5	–	**–**	**3/A 00 L2**	**BN 90S 4**	**M 2SB 4**	3680	3680	10500	12000	2420	249
35	270	2.0	39.6	–	**–**	**3/A 00 L2**	**BN 90S 4**	**M 2SB 4**	3620	3620	10300	11800	2380	249
44	215	3.0	31.7	–	**–**	**3/A 00 L2**	**BN 90S 4**	**M 2SB 4**	3370	3370	9650	11100	2210	249

P_1 = 1.5 kW

n_2	M_{n2}	f_S	i	Pt					Rn_2 [N]					
min^{-1}	Nm			kW					MC/PC	MZ/PZ	HC	HZ	FZ	
0.27	34900	1.0	5081	–	**3/V 10 L4**	**–**	**BN 90LA 4**	**–**	–	–	133000	166000	65000	340
0.27	34900	1.0	5081	–	**3/V 10 L4**	**–**	**BN 90LA 4**	**–**	–	–	133000	166000	65000	340
0.28	35100	1.5	5046	–	**3/V 13 L4**	**–**	**BN 90LA 4**	**–**	–	–	192000	231000	80000	364
0.28	35900	1.3	5021	–	**3/V 11 L4**	**–**	**BN 90LA 4**	**–**	–	–	157000	195000	65000	352
0.30	31800	1.0	4637	–	**3/V 10 L4**	**–**	**BN 90LA 4**	**–**	–	–	133000	166000	65000	340
0.30	31800	1.0	4637	–	**3/V 10 L4**	**–**	**BN 90LA 4**	**–**	–	–	133000	166000	65000	340
0.31	32800	1.8	4536	–	**3/V 13 L4**	**–**	**BN 90LA 4**	**–**	–	–	192000	231000	80000	364
0.32	31900	1.4	4410	–	**3/V 11 L4**	**–**	**BN 90LA 4**	**–**	–	–	157000	195000	65000	352
0.34	28600	1.7	4106	–	**3/V 11 L4**	**–**	**BN 90LA 4**	**–**	–	–	157000	195000	65000	352
0.34	29300	1.9	4046	–	**3/V 13 L4**	**–**	**BN 90LA 4**	**–**	–	–	192000	231000	80000	364
0.34	31900	1.0	4036	–	**3/V 10 L4**	**–**	**BN 90LA 4**	**–**	–	–	133000	166000	65000	340
0.34	31900	1.0	4036	–	**3/V 10 L4**	**–**	**BN 90LA 4**	**–**	–	–	133000	166000	65000	340
0.39	25500	1.2	3570	–	**3/V 10 L4**	**–**	**BN 90LA 4**	**–**	–	–	133000	166000	65000	340
0.39	25500	1.2	3570	–	**3/V 10 L4**	**–**	**BN 90LA 4**	**–**	–	–	133000	166000	65000	340
0.39	24700	1.7	3557	–	**3/V 11 L4**	**–**	**BN 90LA 4**	**–**	–	–	157000	195000	65000	352
0.40	27800	2.1	3515	–	**3/V 13 L4**	**–**	**BN 90LA 4**	**–**	–	–	192000	231000	80000	364
0.42	25800	1.3	3273	–	**3/V 10 L4**	**–**	**BN 90LA 4**	**–**	–	–	133000	166000	65000	340
0.42	25800	1.3	3273	–	**3/V 10 L4**	**–**	**BN 90LA 4**	**–**	–	–	133000	166000	65000	340
0.43	25800	2.2	3263	–	**3/V 13 L4**	**–**	**BN 90LA 4**	**–**	–	–	192000	231000	80000	364
0.43	25400	1.8	3222	–	**3/V 11 L4**	**–**	**BN 90LA 4**	**–**	–	–	157000	195000	65000	352
0.48	22500	2.1	2887	–	**3/V 11 L4**	**–**	**BN 90LA 4**	**–**	–	–	157000	195000	65000	352
0.49	22400	1.4	2835	–	**3/V 10 L4**	**–**	**BN 90LA 4**	**–**	–	–	133000	166000	65000	340
0.49	22400	1.4	2835	–	**3/V 10 L4**	**–**	**BN 90LA 4**	**–**	–	–	133000	166000	65000	340
0.50	20100	2.8	2773	–	**3/V 13 L4**	**–**	**BN 90LA 4**	**–**	–	–	192000	231000	80000	364
0.55	19800	2.4	2510	–	**3/V 11 L4**	**–**	**BN 90LA 4**	**–**	–	–	157000	195000	65000	352
0.57	19600	1.7	2455	–	**3/V 10 L4**	**–**	**BN 90LA 4**	**–**	–	–	133000	166000	65000	340
0.57	19600	1.7	2455	–	**3/V 10 L4**	**–**	**BN 90LA 4**	**–**	–	–	133000	166000	65000	340
0.63	17400	1.9	2209	–	**3/V 10 L4**	**–**	**BN 90LA 4**	**–**	–	–	133000	166000	65000	340
0.63	17400	1.9	2209	–	**3/V 10 L4**	**–**	**BN 90LA 4**	**–**	–	–	133000	166000	65000	340
0.69	15900	1.8	2016	–	**3/V 10 L4**	**–**	**BN 90LA 4**	**–**	–	–	133000	166000	65000	340
0.69	15900	1.8	2016	–	**3/V 10 L4**	**–**	**BN 90LA 4**	**–**	–	–	133000	166000	65000	340
0.71	13300	0.9	1964	–	**3/V 07 L3**	**–**	**BN 90LA 4**	**–**	52000	65000	109000	145000	45000	316
0.76	14400	1.9	1826	–	**3/V 10 L4**	**–**	**BN 90LA 4**	**–**	–	–	133000	166000	65000	340
0.76	14400	1.9	1826	–	**3/V 10 L4**	**–**	**BN 90LA 4**	**–**	–	–	133000	166000	65000	340
0.84	13200	2.5	1657	–	**3/V 10 L4**	**–**	**BN 90LA 4**	**–**	–	–	133000	166000	65000	340
0.84	13200	2.5	1657	–	**3/V 10 L4**	**–**	**BN 90LA 4**	**–**	–	–	133000	166000	65000	340
0.90	11400	1.0	1545	–	**3/V 07 L3**	**–**	**BN 90LA 4**	**–**	52000	65000	109000	145000	45000	316
0.98	10100	1.2	1411	–	**3/V 07 L3**	**–**	**BN 90LA 4**	**–**	50700	63600	108200	141800	44100	316
1.1	9240	1.6	1288	–	**3/V 07 L3**	**–**	**BN 90LA 4**	**–**	49200	61700	105300	138000	42800	316
1.1	8580	0.9	1212	–	**3/V 06 L3**	**–**	**BN 90LA 4**	**–**	43400	49200	96100	111900	32600	304
1.2	8650	1.2	1159	–	**3/V 07 L3**	**–**	**BN 90LA 4**	**–**	47500	59600	102000	133700	41300	316
1.2	8490	1.0	1153	–	**3/V 06 L3**	**–**	**BN 90LA 4**	**–**	42700	48400	94700	110200	32100	304
1.4	7470	1.9	1015	–	**3/V 07 L3**	**–**	**BN 90LA 4**	**–**	45400	57000	98000	128400	39500	316
1.4	7310	1.3	992	–	**3/V 06 L3**	**–**	**BN 90LA 4**	**–**	40600	46000	90500	105400	30500	304
1.5	7570	1.0	930	–	**3/V 06 L3**	**–**	**BN 90LA 4**	**–**	39700	45000	88800	103400	29800	304

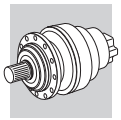

P_1 = 1.5 kW

n_2	M_{n2}	f_S	i	Pt					Rn_2 [N]					
min^{-1}	Nm			kW					MC/PC	MZ/PZ	HC	HZ	FZ	
1.5	6870	1.8	920	–	**3/V 07 L3**	**–**	**BN 90LA 4**	**–**	44000	55200	95200	124700	38200	316
1.8	5820	1.3	791	–	**3/V 06 L3**	**–**	**BN 90LA 4**	**–**	37600	42600	84500	98400	28300	304
1.8	6290	1.6	773	–	**3/V 07 L3**	**–**	**BN 90LA 4**	**–**	41500	52100	90300	118400	36100	316
1.8	5680	2.5	761	–	**3/V 07 L3**	**–**	**BN 90LA 4**	**–**	41300	51800	89900	117800	35900	316
2.0	5750	1.3	698	–	**3/V 06 L3**	**–**	**BN 90LA 4**	**–**	36100	40900	81400	94800	27100	304
2.1	6100	1.0	671	–	**–**	**3/A 06 L2**	**BN 90LA 4**	**M 3SA 4**	35600	40400	80500	93700	26800	305
2.1	5380	1.7	661	–	**3/V 06 L3**	**–**	**BN 90LA 4**	**–**	35500	40200	80100	93300	26600	304
2.1	4880	2.9	655	–	**3/V 07 L3**	**–**	**BN 90LA 4**	**–**	39300	49300	85900	112600	34100	316
2.2	4650	1.0	623	–	**3/V 05 L3**	**–**	**BN 90LA 4**	**–**	27900	32200	48100	57900	17900	292
2.3	5560	1.1	611	–	**–**	**3/A 06 L2**	**BN 90LA 4**	**M 3SA 4**	34500	39100	78300	91100	25900	305
2.4	4740	1.0	576	–	**3/V 05 L3**	**–**	**BN 90LA 4**	**–**	27200	31400	47000	56500	17400	292
2.4	4630	1.8	569	–	**3/V 06 L3**	**–**	**BN 90LA 4**	**–**	33700	38200	76600	89200	25300	304
2.5	5050	1.4	555	–	**–**	**3/A 06 L2**	**BN 90LA 4**	**M 3SA 4**	33400	37900	76000	88500	25100	305
2.6	4250	0.9	529	–	**3/V 05 L3**	**–**	**BN 90LA 4**	**–**	26400	30500	45800	55100	17000	292
2.6	4290	1.8	527	–	**3/V 06 L3**	**–**	**BN 90LA 4**	**–**	32900	37200	74900	87200	24700	304
2.8	4590	1.6	505	–	**–**	**3/A 06 L2**	**BN 90LA 4**	**M 3SA 4**	32400	36700	73900	86100	24400	305
3.0	3800	1.3	462	–	**3/V 05 L3**	**–**	**BN 90LA 4**	**–**	25300	29200	44000	52900	16200	292
3.1	3510	1.1	453	–	**3/V 04 L3**	**–**	**BN 90LA 4**	**–**	25100	29000	43700	52600	16100	280
3.2	3990	2.3	439	–	**–**	**3/A 07 L2**	**BN 90LA 4**	**M 3SA 4**	34400	43100	76200	99900	29900	317
3.2	3950	2.0	435	–	**–**	**3/A 06 L2**	**BN 90LA 4**	**M 3SA 4**	30800	34900	70600	82300	23200	305
3.3	3510	2.5	427	–	**3/V 06 L3**	**–**	**BN 90LA 4**	**–**	30600	34700	70300	81800	23000	304
3.3	3970	1.1	422	–	**–**	**3/A 05 L2**	**BN 90LA 4**	**M 3SA 4**	24500	28300	42800	51500	15700	293
3.4	3680	2.5	405	–	**–**	**3/A 07 L2**	**BN 90LA 4**	**M 3SA 4**	33500	42000	74400	97500	29100	317
3.5	3270	1.2	396	–	**3/V 05 L3**	**–**	**BN 90LA 4**	**–**	24000	27700	42000	50500	15400	292
3.5	3260	2.3	395	–	**3/V 06 L3**	**–**	**BN 90LA 4**	**–**	29900	33800	68700	80000	22400	304
3.6	3530	1.6	388	–	**–**	**3/A 06 L2**	**BN 90LA 4**	**M 3SA 4**	29700	33600	68300	79500	22300	305
3.6	3260	2.8	386	–	**3/V 07 L3**	**–**	**BN 90LA 4**	**–**	32900	41300	73400	96100	28600	316
3.6	2970	1.2	384	–	**3/V 04 L3**	**–**	**BN 90LA 4**	**–**	23700	27400	41600	50100	15200	280
3.7	3460	1.8	380	–	**–**	**3/A 06 L2**	**BN 90LA 4**	**M 3SA 4**	29500	33400	67900	79000	22200	305
4.2	3090	1.2	329	–	**–**	**3/A 05 L2**	**BN 90LA 4**	**M 3SA 4**	22600	26100	39700	47800	14500	293
4.3	2910	2.3	321	–	**–**	**3/A 06 L2**	**BN 90LA 4**	**M 3SA 4**	27900	31600	64500	75100	20900	305
4.9	2660	1.1	283	–	**–**	**3/A 04 L2**	**BN 90LA 4**	**M 3SA 4**	21500	24800	38000	45700	13800	281
5.0	2630	1.4	280	–	**–**	**3/A 05 L2**	**BN 90LA 4**	**M 3SA 4**	21400	24700	37800	45500	13700	293
5.2	2430	2.3	267	–	**–**	**3/A 06 L2**	**BN 90LA 4**	**M 3SA 4**	26200	29700	61000	71100	19700	305
5.6	2350	1.5	250	–	**–**	**3/A 04 L2**	**BN 90LA 4**	**M 3SA 4**	20600	23800	36600	44000	13200	281
5.8	2260	1.9	241	–	**–**	**3/A 05 L2**	**BN 90LA 4**	**M 3SA 4**	20300	23500	36200	43500	13000	293
6.2	2120	1.7	226	–	**–**	**3/A 04 L2**	**BN 90LA 4**	**M 3SA 4**	19900	23000	35500	42700	12800	281
6.5	1990	1.6	212	–	**–**	**3/A 05 L2**	**BN 90LA 4**	**M 3SA 4**	19500	22500	34800	41900	12500	293
6.5	1990	1.6	212	–	**–**	**3/A 05 L2**	**BN 90LA 4**	**M 3SA 4**	19500	22500	34800	41900	12500	293
6.8	1930	1.8	205	–	**–**	**3/A 04 L2**	**BN 90LA 4**	**M 3SA 4**	19300	22300	34500	41500	12400	281
7.7	1710	1.1	182	–	**–**	**3/A 03 L2**	**BN 90LA 4**	**M 3SA 4**	18500	21400	33200	40000	11900	269
7.9	1650	2.2	175	–	**–**	**3/A 05 L2**	**BN 90LA 4**	**M 3SA 4**	18300	21100	32900	39600	11700	293
8.0	1630	1.8	174	–	**–**	**3/A 04 L2**	**BN 90LA 4**	**M 3SA 4**	18200	21100	32800	39500	11700	281
8.6	1520	1.9	162	–	**–**	**3/A 04 L2**	**BN 90LA 4**	**M 3SA 4**	17800	20600	32100	38700	11400	281
8.6	1520	1.9	162	–	**–**	**3/A 05 L2**	**BN 90LA 4**	**M 3SA 4**	17800	20600	32100	38700	11400	293
9.3	1400	1.7	149	–	**–**	**3/A 04 L2**	**BN 90LA 4**	**M 3SA 4**	17300	20000	31300	37700	11100	281
9.9	1320	2.7	141	–	**–**	**3/A 05 L2**	**BN 90LA 4**	**M 3SA 4**	17000	19600	30800	37000	10900	293
10.4	1250	1.0	133	–	**–**	**3/A 01 L2**	**BN 90LA 4**	**M 3SA 4**	5430	5430	14800	17100	3570	259
10.8	1210	2.2	129	–	**–**	**3/A 04 L2**	**BN 90LA 4**	**M 3SA 4**	16500	19100	30000	36100	10600	281
11.9	1100	2.2	117	–	**–**	**3/A 04 L2**	**BN 90LA 4**	**M 3SA 4**	16000	18500	29100	35000	10300	281
13.6	960	2.7	102	–	**–**	**3/A 04 L2**	**BN 90LA 4**	**M 3SA 4**	15300	17600	27900	33600	9790	281
13.7	950	1.2	102	–	**–**	**3/A 01 L2**	**BN 90LA 4**	**M 3SA 4**	4960	4960	13700	15700	3260	259
14.3	910	1.9	96.9	–	**–**	**3/A 03 L2**	**BN 90LA 4**	**M 3SA 4**	15000	17300	27500	33100	9630	269
15.3	850	2.8	90.7	–	**–**	**3/A 04 L2**	**BN 90LA 4**	**M 3SA 4**	14700	17000	27000	32500	9420	281
15.7	830	2.0	88.5	–	**–**	**3/A 03 L2**	**BN 90LA 4**	**M 3SA 4**	14600	16800	26800	32200	9340	269
17.1	760	1.7	81.3	–	**–**	**3/A 01 L2**	**BN 90LA 4**	**M 3SA 4**	4610	4610	12800	14700	3030	259
18.7	700	1.7	74.2	–	**–**	**3/A 01 L2**	**BN 90LA 4**	**M 3SA 4**	4470	4470	12400	14300	2940	259
19.0	690	2.6	73.2	–	**–**	**3/A 03 L2**	**BN 90LA 4**	**M 3SA 4**	13700	15800	25300	30400	8770	269
19.6	670	1.0	71.0	–	**–**	**3/A 00 L2**	**BN 90LA 4**	**M 3SA 4**	4400	4400	12300	14100	2890	249
22.1	590	2.6	62.9	–	**–**	**3/A 03 L2**	**BN 90LA 4**	**M 3SA 4**	13000	15000	24200	29100	8340	269
22.7	570	1.1	61.2	–	**–**	**3/A 00 L2**	**BN 90LA 4**	**M 3SA 4**	4190	4190	11700	13500	2750	249
23.4	560	2.3	59.4	–	**–**	**3/A 01 L2**	**BN 90LA 4**	**M 3SA 4**	4150	4150	11600	13400	2730	259
25.6	510	2.3	54.2	–	**–**	**3/A 01 L2**	**BN 90LA 4**	**M 3SA 4**	4020	4020	11300	13000	2650	259
26.8	485	1.1	51.8	–	**–**	**3/A 00 L2**	**BN 90LA 4**	**M 3SA 4**	3960	3960	11200	12800	2610	249
28.3	460	1.8	49.1	–	**–**	**3/A 01 L2**	**BN 90LA 4**	**M 3SA 4**	3890	3890	11000	12600	2560	259

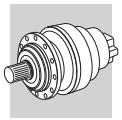

A

P_1 = 1.5 kW

n_2 min^{-1}	M_{n2} Nm	f_S	i	Pt kW					Rn$_2$ [N] MC/PC	MZ/PZ	HC	HZ	FZ	
32	410	2.3	43.9	–	–	**3/A 01 L2**	**BN 90LA 4**	**M 3SA 4**	3750	3750	10600	12200	2470	259
33	390	1.7	41.5	–	–	**3/A 00 L2**	**BN 90LA 4**	**M 3SA 4**	3680	3680	10500	12000	2420	249
35	375	2.3	40.1	–	–	**3/A 01 L2**	**BN 90LA 4**	**M 3SA 4**	3640	3640	10300	11900	2390	259
35	370	1.5	39.6	–	–	**3/A 00 L2**	**BN 90LA 4**	**M 3SA 4**	3620	3620	10300	11800	2380	249
39	335	2.3	35.8	–	–	**3/A 01 L2**	**BN 90LA 4**	**M 3SA 4**	3500	3500	10000	11500	2300	259
44	300	2.2	31.7	–	–	**3/A 00 L2**	**BN 90LA 4**	**M 3SA 4**	3370	3370	9650	11100	2210	249
59	220	2.6	23.4	–	–	**3/A 00 L2**	**BN 90LA 4**	**M 3SA 4**	3040	3040	8810	10100	2000	249
73	180	2.6	19.1	–	–	**3/A 00 L2**	**BN 90LA 4**	**M 3SA 4**	2840	2840	8290	9530	1870	249

P_1 = 1.85 kW

n_2 min^{-1}	M_{n2} Nm	f_S	i	Pt kW					Rn$_2$ [N] MC/PC	MZ/PZ	HC	HZ	FZ	
0.28	43300	1.2	5046	–	**3/V 13 L4**	–	**BN 90LB 4**	–	–	–	192000	231000	80000	364
0.28	44200	1.1	5021	–	**3/V 11 L4**	–	**BN 90LB 4**	–	–	–	157000	195000	65000	352
0.31	40500	1.4	4536	–	**3/V 13 L4**	–	**BN 90LB 4**	–	–	–	192000	231000	80000	364
0.32	39400	1.1	4410	–	**3/V 11 L4**	–	**BN 90LB 4**	–	–	–	157000	195000	65000	352
0.34	35200	1.4	4106	–	**3/V 11 L4**	–	**BN 90LB 4**	–	–	–	157000	195000	65000	352
0.34	36100	1.5	4046	–	**3/V 13 L4**	–	**BN 90LB 4**	–	–	–	192000	231000	80000	364
0.39	31400	1.0	3570	–	**3/V 10 L4**	–	**BN 90LB 4**	–	–	–	133000	166000	65000	340
0.39	31400	1.0	3570	–	**3/V 10 L4**	–	**BN 90LB 4**	–	–	–	133000	166000	65000	340
0.39	30500	1.4	3557	–	**3/V 11 L4**	–	**BN 90LB 4**	–	–	–	157000	195000	65000	352
0.40	34200	1.7	3515	–	**3/V 13 L4**	–	**BN 90LB 4**	–	–	–	192000	231000	80000	364
0.42	31900	1.1	3273	–	**3/V 10 L4**	–	**BN 90LB 4**	–	–	–	133000	166000	65000	340
0.42	31900	1.1	3273	–	**3/V 10 L4**	–	**BN 90LB 4**	–	–	–	133000	166000	65000	340
0.43	31800	1.7	3263	–	**3/V 13 L4**	–	**BN 90LB 4**	–	–	–	192000	231000	80000	364
0.43	31400	1.5	3222	–	**3/V 11 L4**	–	**BN 90LB 4**	–	–	–	157000	195000	65000	352
0.48	27800	1.7	2887	–	**3/V 11 L4**	–	**BN 90LB 4**	–	–	–	157000	195000	65000	352
0.49	27600	1.1	2835	–	**3/V 10 L4**	–	**BN 90LB 4**	–	–	–	133000	166000	65000	340
0.49	27600	1.1	2835	–	**3/V 10 L4**	–	**BN 90LB 4**	–	–	–	133000	166000	65000	340
0.50	24800	2.2	2773	–	**3/V 13 L4**	–	**BN 90LB 4**	–	–	–	192000	231000	80000	364
0.55	24400	2.0	2510	–	**3/V 11 L4**	–	**BN 90LB 4**	–	–	–	157000	195000	65000	352
0.57	24200	1.4	2455	–	**3/V 10 L4**	–	**BN 90LB 4**	–	–	–	133000	166000	65000	340
0.57	24200	1.4	2455	–	**3/V 10 L4**	–	**BN 90LB 4**	–	–	–	133000	166000	65000	340
0.63	21500	1.5	2209	–	**3/V 10 L4**	–	**BN 90LB 4**	–	–	–	133000	166000	65000	340
0.63	21500	1.5	2209	–	**3/V 10 L4**	–	**BN 90LB 4**	–	–	–	133000	166000	65000	340
0.69	19600	1.5	2016	–	**3/V 10 L4**	–	**BN 90LB 4**	–	–	–	133000	166000	65000	340
0.69	19600	1.5	2016	–	**3/V 10 L4**	–	**BN 90LB 4**	–	–	–	133000	166000	65000	340
0.76	17800	1.5	1826	–	**3/V 10 L4**	–	**BN 90LB 4**	–	–	–	133000	166000	65000	340
0.76	17800	1.5	1826	–	**3/V 10 L4**	–	**BN 90LB 4**	–	–	–	133000	166000	65000	340
0.84	16300	2.0	1657	–	**3/V 10 L4**	–	**BN 90LB 4**	–	–	–	133000	166000	65000	340
0.84	16300	2.0	1657	–	**3/V 10 L4**	–	**BN 90LB 4**	–	–	–	133000	166000	65000	340
0.98	12500	1.0	1411	–	**3/V 07 L3**	–	**BN 90LB 4**	–	50700	63600	108200	141800	44100	316
1.1	11400	1.3	1288	–	**3/V 07 L3**	–	**BN 90LB 4**	–	49200	61700	105300	138000	42800	316
1.2	10700	1.0	1159	–	**3/V 07 L3**	–	**BN 90LB 4**	–	47500	59600	102000	133700	41300	316
1.4	9210	1.6	1015	–	**3/V 07 L3**	–	**BN 90LB 4**	–	45400	57000	98000	128400	39500	316
1.4	9010	1.0	992	–	**3/V 06 L3**	–	**BN 90LB 4**	–	40600	46000	90500	105400	30500	304
1.5	8470	1.5	920	–	**3/V 07 L3**	–	**BN 90LB 4**	–	44000	55200	95200	124700	38200	316
1.8	7180	1.1	791	–	**3/V 06 L3**	–	**BN 90LB 4**	–	37600	42600	84500	98400	28300	304
1.8	7760	1.3	773	–	**3/V 07 L3**	–	**BN 90LB 4**	–	41500	52100	90300	118400	36100	316
1.8	7000	2.0	761	–	**3/V 07 L3**	–	**BN 90LB 4**	–	41300	51800	89900	117800	35900	316
2.0	7080	1.1	698	–	**3/V 06 L3**	–	**BN 90LB 4**	–	36100	40900	81400	94800	27100	304
2.1	6640	1.4	661	–	**3/V 06 L3**	–	**BN 90LB 4**	–	35500	40200	80100	93300	26600	304
2.1	6020	2.4	655	–	**3/V 07 L3**	–	**BN 90LB 4**	–	39300	49300	85900	112600	34100	316
2.4	5710	1.5	569	–	**3/V 06 L3**	–	**BN 90LB 4**	–	33700	38200	76600	89200	25300	304
2.5	6220	1.2	555	–	–	**3/A 06 L2**	**BN 90LB 4**	–	33400	37900	76000	88500	25100	305
2.6	5290	1.4	527	–	**3/V 06 L3**	–	**BN 90LB 4**	–	32900	37200	74900	87200	24700	304
2.7	5090	2.7	507	–	**3/V 07 L3**	–	**BN 90LB 4**	–	36100	45300	79600	104300	31400	316
2.8	5660	1.3	505	–	–	**3/A 06 L2**	**BN 90LB 4**	–	32400	36700	73900	86100	24400	305
3.0	4690	1.0	462	–	**3/V 05 L3**	–	**BN 90LB 4**	–	25300	29200	44000	52900	16200	292
3.0	4620	2.7	460	–	**3/V 07 L3**	–	**BN 90LB 4**	–	34900	43800	77300	101300	30400	316
3.2	4920	1.9	439	–	–	**3/A 07 L2**	**BN 90LB 4**	–	34400	43100	76200	99900	29900	317

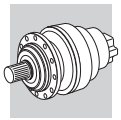

P_1 = 1.85 kW

n_2 min^{-1}	M_{n2} Nm	f_S	i	Pt kW					Rn$_2$ [N] MC/PC	MZ/PZ	HC	HZ	FZ	
3.2	4870	1.6	435	–	–	**3/A 06 L2**	**BN 90LB 4**	–	30800	34900	70600	82300	23200	305
3.3	4330	2.0	427	–	**3/V 06 L3**	–	**BN 90LB 4**	–	30600	34700	70300	81800	23000	304
3.4	4540	2.0	405	–	–	**3/A 07 L2**	**BN 90LB 4**	–	33500	42000	74400	97500	29100	317
3.5	4030	0.9	396	–	**3/V 05 L3**	–	**BN 90LB 4**	–	24000	27700	42000	50500	15400	292
3.5	4010	1.9	395	–	**3/V 06 L3**	–	**BN 90LB 4**	–	29900	33800	68700	80000	22400	304
3.6	4350	1.3	388	–	–	**3/A 06 L2**	**BN 90LB 4**	–	29700	33600	68300	79500	22300	305
3.6	4020	2.2	386	–	**3/V 07 L3**	–	**BN 90LB 4**	–	32900	41300	73400	96100	28600	316
3.6	3670	1.0	384	–	**3/V 04 L3**	–	**BN 90LB 4**	–	23700	27400	41600	50100	15200	280
3.7	4260	1.4	380	–	–	**3/A 06 L2**	**BN 90LB 4**	–	29500	33400	67900	79000	22200	305
4.2	3810	1.0	329	–	–	**3/A 05 L2**	**BN 90LB 4**	–	22600	26100	39700	47800	14500	293
4.3	3590	1.8	321	–	–	**3/A 06 L2**	**BN 90LB 4**	–	27900	31600	64500	75100	20900	305
4.9	3160	2.8	282	–	–	**3/A 07 L2**	**BN 90LB 4**	–	29600	37200	66700	87400	25800	317
5.0	3240	1.1	280	–	–	**3/A 05 L2**	**BN 90LB 4**	–	21400	24700	37800	45500	13700	293
5.0	3090	2.5	276	–	–	**3/A 06 L2**	**BN 90LB 4**	–	26500	30000	61600	71800	19900	305
5.2	2990	1.8	267	–	–	**3/A 06 L2**	**BN 90LB 4**	–	26200	29700	61000	71100	19700	305
5.6	2890	1.2	250	–	–	**3/A 04 L2**	**BN 90LB 4**	–	20600	23800	36600	44000	13200	281
5.8	2790	1.5	241	–	–	**3/A 05 L2**	**BN 90LB 4**	–	20300	23500	36200	43500	13000	293
6.2	2610	1.3	226	–	–	**3/A 04 L2**	**BN 90LB 4**	–	19900	23000	35500	42700	12800	281
6.3	2470	2.6	221	–	–	**3/A 06 L2**	**BN 90LB 4**	–	24600	27900	57700	67100	18500	305
6.5	2460	1.3	212	–	–	**3/A 05 L2**	**BN 90LB 4**	–	19500	22500	34800	41900	12500	293
6.5	2460	1.3	212	–	–	**3/A 05 L2**	**BN 90LB 4**	–	19500	22500	34800	41900	12500	293
6.8	2380	1.5	205	–	–	**3/A 04 L2**	**BN 90LB 4**	–	19300	22300	34500	41500	12400	281
7.0	2220	2.5	198	–	–	**3/A 06 L2**	**BN 90LB 4**	–	23700	26900	55800	65000	17800	305
7.9	2030	1.8	175	–	–	**3/A 05 L2**	**BN 90LB 4**	–	18300	21100	32900	39600	11700	293
8.0	2010	1.5	174	–	–	**3/A 04 L2**	**BN 90LB 4**	–	18200	21100	32800	39500	11700	281
8.6	1880	1.5	162	–	–	**3/A 04 L2**	**BN 90LB 4**	–	17800	20600	32100	38700	11400	281
8.6	1880	1.5	162	–	–	**3/A 05 L2**	**BN 90LB 4**	–	17800	20600	32100	38700	11400	293
9.3	1730	1.4	149	–	–	**3/A 04 L2**	**BN 90LB 4**	–	17300	20000	31300	37700	11100	281
9.9	1630	2.2	141	–	–	**3/A 05 L2**	**BN 90LB 4**	–	17000	19600	30800	37000	10900	293
10.8	1500	1.8	129	–	–	**3/A 04 L2**	**BN 90LB 4**	–	16500	19100	30000	36100	10600	281
11.5	1400	2.5	121	–	–	**3/A 05 L2**	**BN 90LB 4**	–	16200	18700	29400	35400	10400	293
11.9	1350	1.8	117	–	–	**3/A 04 L2**	**BN 90LB 4**	–	16000	18500	29100	35000	10300	281
13.4	1200	2.6	104	–	–	**3/A 05 L2**	**BN 90LB 4**	–	15300	17700	28100	33800	9840	293
13.6	1180	2.2	102	–	–	**3/A 04 L2**	**BN 90LB 4**	–	15300	17600	27900	33600	9790	281
13.7	1180	1.0	102	–	–	**3/A 01 L2**	**BN 90LB 4**	–	4960	4960	13700	15700	3260	259
14.3	1120	1.5	96.9	–	–	**3/A 03 L2**	**BN 90LB 4**	–	15000	17300	27500	33100	9630	269
15.3	1050	2.3	90.7	–	–	**3/A 04 L2**	**BN 90LB 4**	–	14700	17000	27000	32500	9420	281
15.7	1020	1.6	88.5	–	–	**3/A 03 L2**	**BN 90LB 4**	–	14600	16800	26800	32200	9340	269
17.0	950	2.5	81.7	–	–	**3/A 04 L2**	**BN 90LB 4**	–	14200	16400	26200	31500	9100	281
17.1	940	1.4	81.3	–	–	**3/A 01 L2**	**BN 90LB 4**	–	4610	4610	12800	14700	3030	259
18.7	860	1.3	74.2	–	–	**3/A 01 L2**	**BN 90LB 4**	–	4470	4470	12400	14300	2940	259
19.0	850	2.1	73.2	–	–	**3/A 03 L2**	**BN 90LB 4**	–	13700	15800	25300	30400	8770	269
22.1	730	2.1	62.9	–	–	**3/A 03 L2**	**BN 90LB 4**	–	13000	15000	24200	29100	8340	269
22.7	710	0.9	61.2	–	–	**3/A 00 L2**	**BN 90LB 4**	–	4190	4190	11700	13500	2750	249
23.4	690	1.8	59.4	–	–	**3/A 01 L2**	**BN 90LB 4**	–	4150	4150	11600	13400	2730	259
25.6	630	1.9	54.2	–	–	**3/A 01 L2**	**BN 90LB 4**	–	4020	4020	11300	13000	2650	259
26.5	610	2.7	52.5	–	–	**3/A 03 L2**	**BN 90LB 4**	–	12200	14100	22900	27600	7850	269
26.5	610	2.7	52.5	–	–	**3/A 03 L2**	**BN 90LB 4**	–	12200	14100	22900	27600	7850	269
26.8	600	0.9	51.8	–	–	**3/A 00 L2**	**BN 90LB 4**	–	3960	3960	11200	12800	2610	249
28.3	570	1.5	49.1	–	–	**3/A 01 L2**	**BN 90LB 4**	–	3890	3890	11000	12600	2560	259
32	510	1.8	43.9	–	–	**3/A 01 L2**	**BN 90LB 4**	–	3750	3750	10600	12200	2470	259
33	480	1.4	41.5	–	–	**3/A 00 L2**	**BN 90LB 4**	–	3680	3680	10500	12000	2420	249
35	465	1.9	40.1	–	–	**3/A 01 L2**	**BN 90LB 4**	–	3640	3640	10300	11900	2390	259
35	460	1.2	39.6	–	–	**3/A 00 L2**	**BN 90LB 4**	–	3620	3620	10300	11800	2380	249
39	415	1.8	35.8	–	–	**3/A 01 L2**	**BN 90LB 4**	–	3500	3500	10000	11500	2300	259
44	365	1.8	31.7	–	–	**3/A 00 L2**	**BN 90LB 4**	–	3370	3370	9650	11100	2210	249
59	270	2.1	23.4	–	–	**3/A 00 L2**	**BN 90LB 4**	–	3040	3040	8810	10100	2000	249
73	220	2.1	19.1	–	–	**3/A 00 L2**	**BN 90LB 4**	–	2840	2840	8290	9530	1870	249

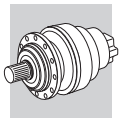

P_1 = 2.2 kW

n_2	M_{n2}	f_S	i	Pt					Rn_2 [N]					
min^{-1}	Nm			kW					MC/PC	MZ/PZ	HC	HZ	FZ	
0.27	56900	1.7	5234	–	**3/V 15 L4**	–	**BN 100LA 4**	–	–	–	206000	243000	90000	388
0.28	50800	1.0	5046	–	**3/V 13 L4**	–	**BN 100LA 4**	–	–	–	192000	231000	80000	364
0.28	51900	0.9	5021	–	**3/V 11 L4**	–	**BN 100LA 4**	–	–	–	157000	195000	65000	352
0.28	51900	1.6	4959	–	**3/V 14 L4**	–	**BN 100LA 4**	–	–	–	206000	243000	90000	376
0.28	53800	1.9	4950	–	**3/V 15 L4**	–	**BN 100LA 4**	–	–	–	206000	243000	90000	388
0.28	53800	2.3	4950	–	**3/V 16 L4**	–	**BN 100LA 4**	–	–	–	345000	385000	150000	400
0.31	47500	1.2	4536	–	**3/V 13 L4**	–	**BN 100LA 4**	–	–	–	192000	231000	80000	364
0.32	46200	1.0	4410	–	**3/V 11 L4**	–	**BN 100LA 4**	–	–	–	157000	195000	65000	352
0.33	45100	1.8	4312	–	**3/V 14 L4**	–	**BN 100LA 4**	–	–	–	206000	243000	90000	376
0.34	45400	2.3	4171	–	**3/V 15 L4**	–	**BN 100LA 4**	–	–	–	206000	243000	90000	388
0.34	41300	1.2	4106	–	**3/V 11 L4**	–	**BN 100LA 4**	–	–	–	157000	195000	65000	352
0.35	42400	1.3	4046	–	**3/V 13 L4**	–	**BN 100LA 4**	–	–	–	192000	231000	80000	364
0.35	45100	1.7	3993	–	**3/V 14 L4**	–	**BN 100LA 4**	–	–	–	206000	243000	90000	376
0.40	35800	1.2	3557	–	**3/V 11 L4**	–	**BN 100LA 4**	–	–	–	157000	195000	65000	352
0.40	40200	1.4	3515	–	**3/V 13 L4**	–	**BN 100LA 4**	–	–	–	192000	231000	80000	364
0.43	37400	0.9	3273	–	**3/V 10 L4**	–	**BN 100LA 4**	–	–	–	133000	166000	65000	340
0.43	37400	0.9	3273	–	**3/V 10 L4**	–	**BN 100LA 4**	–	–	–	133000	166000	65000	340
0.43	37300	1.5	3263	–	**3/V 13 L4**	–	**BN 100LA 4**	–	–	–	192000	231000	80000	364
0.44	36800	1.3	3222	–	**3/V 11 L4**	–	**BN 100LA 4**	–	–	–	157000	195000	65000	352
0.44	35900	2.2	3182	–	**3/V 14 L4**	–	**BN 100LA 4**	–	–	–	206000	243000	90000	376
0.49	32600	1.5	2887	–	**3/V 11 L4**	–	**BN 100LA 4**	–	–	–	157000	195000	65000	352
0.50	32400	0.9	2835	–	**3/V 10 L4**	–	**BN 100LA 4**	–	–	–	133000	166000	65000	340
0.50	32400	0.9	2835	–	**3/V 10 L4**	–	**BN 100LA 4**	–	–	–	133000	166000	65000	340
0.51	30300	2.7	2782	–	**3/V 14 L4**	–	**BN 100LA 4**	–	–	–	206000	243000	90000	376
0.51	29000	1.9	2773	–	**3/V 13 L4**	–	**BN 100LA 4**	–	–	–	192000	231000	80000	364
0.56	28700	1.7	2510	–	**3/V 11 L4**	–	**BN 100LA 4**	–	–	–	157000	195000	65000	352
0.57	28400	1.2	2455	–	**3/V 10 L4**	–	**BN 100LA 4**	–	–	–	133000	166000	65000	340
0.57	28400	1.2	2455	–	**3/V 10 L4**	–	**BN 100LA 4**	–	–	–	133000	166000	65000	340
0.58	25200	1.9	2430	–	**3/V 13 L3**	–	**BN 100LA 4**	–	–	–	192000	231000	80000	364
0.61	24200	1.4	2329	–	**3/V 11 L3**	–	**BN 100LA 4**	–	–	–	157000	195000	65000	352
0.61	24000	2.8	2318	–	**3/V 14 L3**	–	**BN 100LA 4**	–	–	–	206000	243000	90000	376
0.64	25200	1.3	2209	–	**3/V 10 L4**	–	**BN 100LA 4**	–	–	–	133000	166000	65000	340
0.64	25200	1.3	2209	–	**3/V 10 L4**	–	**BN 100LA 4**	–	–	–	133000	166000	65000	340
0.70	20900	2.8	2019	–	**3/V 13 L3**	–	**BN 100LA 4**	–	–	–	192000	231000	80000	364
0.70	23000	1.3	2016	–	**3/V 10 L4**	–	**BN 100LA 4**	–	–	–	133000	166000	65000	340
0.70	23000	1.3	2016	–	**3/V 10 L4**	–	**BN 100LA 4**	–	–	–	133000	166000	65000	340
0.72	20400	2.1	1963	–	**3/V 11 L3**	–	**BN 100LA 4**	–	–	–	157000	195000	65000	352
0.77	20900	1.3	1826	–	**3/V 10 L4**	–	**BN 100LA 4**	–	–	–	133000	166000	65000	340
0.77	20900	1.3	1826	–	**3/V 10 L4**	–	**BN 100LA 4**	–	–	–	133000	166000	65000	340
0.79	18100	1.2	1792	–	**3/V 09 L3**	–	**BN 100LA 4**	–	–	–	110000	145000	36000	352
0.85	19200	1.7	1657	–	**3/V 10 L4**	–	**BN 100LA 4**	–	–	–	133000	166000	65000	340
0.85	19200	1.7	1657	–	**3/V 10 L4**	–	**BN 100LA 4**	–	–	–	133000	166000	65000	340
0.86	17400	2.5	1636	–	**3/V 11 L3**	–	**BN 100LA 4**	–	–	–	157000	195000	65000	352
0.94	16200	1.1	1497	–	**3/V 09 L3**	–	**BN 100LA 4**	–	–	–	110000	144300	36000	352
1.0	15200	1.4	1411	–	**3/V 10 L3**	–	**BN 100LA 4**	–	–	–	130300	163800	63700	340
1.1	13400	1.1	1288	–	**3/V 07 L3**	–	**BN 100LA 4**	–	49200	61700	105300	138000	42800	316
1.1	13900	1.5	1288	–	**3/V 09 L3**	–	**BN 100LA 4**	–	–	–	107000	138000	34200	352
1.1	13600	2.6	1274	–	**3/V 11 L3**	–	**BN 100LA 4**	–	–	–	149300	186000	61600	352
1.1	13200	1.6	1227	–	**3/V 10 L3**	–	**BN 100LA 4**	–	–	–	124900	157100	60800	340
1.2	13000	1.2	1159	–	**3/V 09 L3**	–	**BN 100LA 4**	–	–	–	103600	133700	33000	352
1.3	12100	2.4	1120	–	**3/V 10 L3**	–	**BN 100LA 4**	–	–	–	121600	152800	59000	340
1.4	10800	1.3	1015	–	**3/V 07 L3**	–	**BN 100LA 4**	–	45400	57000	98000	128400	39500	316
1.4	10800	1.7	1004	–	**3/V 09 L3**	–	**BN 100LA 4**	–	–	–	99300	128000	31500	352
1.4	10800	2.9	1004	–	**3/V 10 L3**	–	**BN 100LA 4**	–	–	–	117600	147900	56900	340
1.5	9940	1.2	920	–	**3/V 07 L3**	–	**BN 100LA 4**	–	44000	55200	95200	124700	38200	316
1.5	10300	2.1	920	–	**3/V 10 L3**	–	**BN 100LA 4**	–	–	–	114600	144100	55200	340
1.7	9420	2.1	840	–	**3/V 09 L3**	–	**BN 100LA 4**	–	–	–	94100	121400	29700	352
1.8	8630	2.5	800	–	**3/V 09 L3**	–	**BN 100LA 4**	–	–	–	92700	119600	29200	352
1.8	8420	0.9	791	–	**3/V 06 L3**	–	**BN 100LA 4**	–	37600	42600	84500	98400	28300	304
1.8	9100	1.1	773	–	**3/V 07 L3**	–	**BN 100LA 4**	–	41500	52100	90300	118400	36100	316
1.9	8210	1.7	761	–	**3/V 07 L3**	–	**BN 100LA 4**	–	41300	51800	89900	117800	35900	316
1.9	8530	1.7	761	–	**3/V 09 L3**	–	**BN 100LA 4**	–	–	–	91300	117800	28700	352
2.0	8310	0.9	698	–	**3/V 06 L3**	–	**BN 100LA 4**	–	36100	40900	81400	94800	27100	304
2.1	7790	1.2	661	–	**3/V 06 L3**	–	**BN 100LA 4**	–	35500	40200	80100	93300	26600	304
2.2	7070	2.0	655	–	**3/V 07 L3**	–	**BN 100LA 4**	–	39300	49300	85900	112600	34100	316

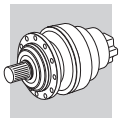

P_1 = 2.2 kW

n_2	M_{n2}	f_S	i	Pt					Rn_2 [N]					
min^{-1}	Nm			kW					MC/PC	MZ/PZ	HC	HZ	FZ	
2.2	7340	2.4	655	–	**3/V 09 L3**	**–**	**BN 100LA 4**	**–**	–	–	87300	112600	27300	352
2.5	6700	1.3	569	–	**3/V 06 L3**	**–**	**BN 100LA 4**	**–**	33700	38200	76600	89200	25300	304
2.5	7300	1.0	555	–	**–**	**3/A 06 L2**	**BN 100LA 4**	**M 3LA 4**	33400	37900	76000	88500	25100	305
2.7	6210	1.2	527	–	**3/V 06 L3**	**–**	**BN 100LA 4**	**–**	32900	37200	74900	87200	24700	304
2.8	5970	2.3	507	–	**3/V 07 L3**	**–**	**BN 100LA 4**	**–**	36100	45300	79600	104300	31400	316
2.8	6650	1.1	505	–	**–**	**3/A 06 L2**	**BN 100LA 4**	**M 3LA 4**	32400	36700	73900	86100	24400	305
3.1	5420	2.3	460	–	**3/V 07 L3**	**–**	**BN 100LA 4**	**–**	34900	43800	77300	101300	30400	316
3.2	5770	1.6	439	–	**–**	**3/A 07 L2**	**BN 100LA 4**	**M 3LA 4**	34400	43100	76200	99900	29900	317
3.2	5720	1.4	435	–	**–**	**3/A 06 L2**	**BN 100LA 4**	**M 3LA 4**	30800	34900	70600	82300	23200	305
3.3	5080	1.7	427	–	**3/V 06 L3**	**–**	**BN 100LA 4**	**–**	30600	34700	70300	81800	23000	304
3.5	5330	1.7	405	–	**–**	**3/A 07 L2**	**BN 100LA 4**	**M 3LA 4**	33500	42000	74400	97500	29100	317
3.6	4710	1.6	395	–	**3/V 06 L3**	**–**	**BN 100LA 4**	**–**	29900	33800	68700	80000	22400	304
3.6	5100	1.1	388	–	**–**	**3/A 06 L2**	**BN 100LA 4**	**M 3LA 4**	29700	33600	68300	79500	22300	305
3.6	4710	1.9	386	–	**3/V 07 L3**	**–**	**BN 100LA 4**	**–**	32900	41300	73400	96100	28600	316
3.7	5000	1.2	380	–	**–**	**3/A 06 L2**	**BN 100LA 4**	**M 3LA 4**	29500	33400	67900	79000	22200	305
4.1	4490	2.6	341	–	**–**	**3/A 07 L2**	**BN 100LA 4**	**M 3LA 4**	31600	39700	70700	92600	27500	317
4.4	4220	1.6	321	–	**–**	**3/A 06 L2**	**BN 100LA 4**	**M 3LA 4**	27900	31600	64500	75100	20900	305
5.0	3700	2.3	282	–	**–**	**3/A 07 L2**	**BN 100LA 4**	**M 3LA 4**	29600	37200	66700	87400	25800	317
5.0	3800	0.9	280	–	**–**	**3/A 05 L2**	**BN 100LA 4**	**M 3LA 4**	21400	24700	37800	45500	13700	293
5.1	3630	2.1	276	–	**–**	**3/A 06 L2**	**BN 100LA 4**	**M 3LA 4**	26500	30000	61600	71800	19900	305
5.3	3510	1.6	267	–	**–**	**3/A 06 L2**	**BN 100LA 4**	**M 3LA 4**	26200	29700	61000	71100	19700	305
5.6	3400	1.0	250	–	**–**	**3/A 04 L2**	**BN 100LA 4**	**M 3LA 4**	20600	23800	36600	44000	13200	281
5.8	3170	2.8	241	–	**–**	**3/A 07 L2**	**BN 100LA 4**	**M 3LA 4**	28200	35300	63700	83500	24500	317
5.9	3270	1.3	241	–	**–**	**3/A 05 L2**	**BN 100LA 4**	**M 3LA 4**	20300	23500	36200	43500	13000	293
6.2	3070	1.1	226	–	**–**	**3/A 04 L2**	**BN 100LA 4**	**M 3LA 4**	19900	23000	35500	42700	12800	281
6.4	2900	2.2	221	–	**–**	**3/A 06 L2**	**BN 100LA 4**	**M 3LA 4**	24600	27900	57700	67100	18500	305
6.6	2880	1.1	212	–	**–**	**3/A 05 L2**	**BN 100LA 4**	**M 3LA 4**	19500	22500	34800	41900	12500	293
6.6	2880	1.1	212	–	**–**	**3/A 05 L2**	**BN 100LA 4**	**M 3LA 4**	19500	22500	34800	41900	12500	293
6.9	2790	1.3	205	–	**–**	**3/A 04 L2**	**BN 100LA 4**	**M 3LA 4**	19300	22300	34500	41500	12400	281
7.1	2600	2.1	198	–	**–**	**3/A 06 L2**	**BN 100LA 4**	**M 3LA 4**	23700	26900	55800	65000	17800	305
8.0	2380	1.5	175	–	**–**	**3/A 05 L2**	**BN 100LA 4**	**M 3LA 4**	18300	21100	32900	39600	11700	293
8.1	2360	1.3	174	–	**–**	**3/A 04 L2**	**BN 100LA 4**	**M 3LA 4**	18200	21100	32800	39500	11700	281
8.7	2210	1.3	162	–	**–**	**3/A 04 L2**	**BN 100LA 4**	**M 3LA 4**	17800	20600	32100	38700	11400	281
8.7	2210	1.3	162	–	**–**	**3/A 05 L2**	**BN 100LA 4**	**M 3LA 4**	17800	20600	32100	38700	11400	293
9.5	2030	1.2	149	–	**–**	**3/A 04 L2**	**BN 100LA 4**	**M 3LA 4**	17300	20000	31300	37700	11100	281
10.0	1910	1.9	141	–	**–**	**3/A 05 L2**	**BN 100LA 4**	**M 3LA 4**	17000	19600	30800	37000	10900	293
10.9	1760	1.5	129	–	**–**	**3/A 04 L2**	**BN 100LA 4**	**M 3LA 4**	16500	19100	30000	36100	10600	281
11.6	1640	2.1	121	–	**–**	**3/A 05 L2**	**BN 100LA 4**	**M 3LA 4**	16200	18700	29400	35400	10400	293
12.1	1590	1.5	117	–	**–**	**3/A 04 L2**	**BN 100LA 4**	**M 3LA 4**	16000	18500	29100	35000	10300	281
13.6	1410	2.2	104	–	**–**	**3/A 05 L2**	**BN 100LA 4**	**M 3LA 4**	15300	17700	28100	33800	9840	293
13.8	1380	1.8	102	–	**–**	**3/A 04 L2**	**BN 100LA 4**	**M 3LA 4**	15300	17600	27900	33600	9790	281
14.6	1320	1.3	96.9	–	**–**	**3/A 03 L2**	**BN 100LA 4**	**M 3LA 4**	15000	17300	27500	33100	9630	269
15.5	1230	1.9	90.7	–	**–**	**3/A 04 L2**	**BN 100LA 4**	**M 3LA 4**	14700	17000	27000	32500	9420	281
15.9	1200	1.4	88.5	–	**–**	**3/A 03 L2**	**BN 100LA 4**	**M 3LA 4**	14600	16800	26800	32200	9340	269
17.3	1110	2.1	81.7	–	**–**	**3/A 04 L2**	**BN 100LA 4**	**M 3LA 4**	14200	16400	26200	31500	9100	281
17.3	1110	1.2	81.3	–	**–**	**3/A 01 L2**	**BN 100LA 4**	**M 3LA 4**	4610	4610	12800	14700	3030	259
18.6	1030	3.0	75.8	–	**–**	**3/A 05 L2**	**BN 100LA 4**	**M 3LA 4**	13800	16000	25600	30800	8870	293
19.0	1010	1.1	74.2	–	**–**	**3/A 01 L2**	**BN 100LA 4**	**M 3LA 4**	4470	4470	12400	14300	2940	259
19.3	990	1.8	73.2	–	**–**	**3/A 03 L2**	**BN 100LA 4**	**M 3LA 4**	13700	15800	25300	30400	8770	269
20.6	930	2.7	68.4	–	**–**	**3/A 04 L2**	**BN 100LA 4**	**M 3LA 4**	13400	15400	24800	29800	8580	281
22.4	860	1.8	62.9	–	**–**	**3/A 03 L2**	**BN 100LA 4**	**M 3LA 4**	13000	15000	24200	29100	8340	269
23.7	810	1.6	59.4	–	**–**	**3/A 01 L2**	**BN 100LA 4**	**M 3LA 4**	4150	4150	11600	13400	2730	259
26.0	740	1.6	54.2	–	**–**	**3/A 01 L2**	**BN 100LA 4**	**M 3LA 4**	4020	4020	11300	13000	2650	259
26.9	710	2.3	52.5	–	**–**	**3/A 03 L2**	**BN 100LA 4**	**M 3LA 4**	12200	14100	22900	27600	7850	269
26.9	710	2.3	52.5	–	**–**	**3/A 03 L2**	**BN 100LA 4**	**M 3LA 4**	12200	14100	22900	27600	7850	269
28.7	670	1.2	49.1	–	**–**	**3/A 01 L2**	**BN 100LA 4**	**M 3LA 4**	3890	3890	11000	12600	2560	259
32	600	1.6	43.9	–	**–**	**3/A 01 L2**	**BN 100LA 4**	**M 3LA 4**	3750	3750	10600	12200	2470	259
34	560	1.2	41.5	–	**–**	**3/A 00 L2**	**BN 100LA 4**	**M 3LA 4**	3680	3680	10500	12000	2420	249
35	550	3.0	40.5	–	**–**	**3/A 03 L2**	**BN 100LA 4**	**M 3LA 4**	11200	13000	21200	25500	7200	269
35	540	1.6	40.1	–	**–**	**3/A 01 L2**	**BN 100LA 4**	**M 3LA 4**	3640	3640	10300	11900	2390	259
36	540	1.0	39.6	–	**–**	**3/A 00 L2**	**BN 100LA 4**	**M 3LA 4**	3620	3620	10300	11800	2380	249
39	485	1.6	35.8	–	**–**	**3/A 01 L2**	**BN 100LA 4**	**M 3LA 4**	3500	3500	10000	11500	2300	259
44	430	1.5	31.7	–	**–**	**3/A 00 L2**	**BN 100LA 4**	**M 3LA 4**	3370	3370	9650	11100	2210	249
45	425	2.8	31.2	–	**–**	**3/A 01 L2**	**BN 100LA 4**	**M 3LA 4**	3340	3340	9600	11000	2200	259
60	320	1.8	23.4	–	**–**	**3/A 00 L2**	**BN 100LA 4**	**M 3LA 4**	3040	3040	8810	10100	2000	249

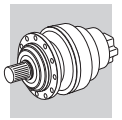

P_1 = 2.2 kW

n_2	M_{n2}	f_S	i	Pt					Rn_2 [N]					
min^{-1}	Nm			kW					MC/PC	MZ/PZ	HC	HZ	FZ	
61	315	2.8	23.0	–	**–**	**3/A 01 L2**	**BN 100LA 4**	**M 3LA 4**	3020	3020	8760	10100	1990	259
74	260	1.8	19.1	–	**–**	**3/A 00 L2**	**BN 100LA 4**	**M 3LA 4**	2840	2840	8290	9530	1870	249
75	255	2.8	18.8	–	**–**	**3/A 01 L2**	**BN 100LA 4**	**M 3LA 4**	2830	2830	8250	9470	1860	259

P_1 = 3 kW

n_2	M_{n2}	f_S	i	Pt					Rn_2 [N]					
min^{-1}	Nm			kW					MC/PC	MZ/PZ	HC	HZ	FZ	
0.27	76400	1.3	5234	–	**3/V 15 L4**	**–**	**BN 100LB 4**	**–**	–	–	206000	243000	90000	388
0.28	69700	1.2	4959	–	**3/V 14 L4**	**–**	**BN 100LB 4**	**–**	–	–	206000	243000	90000	376
0.28	72300	1.5	4950	–	**3/V 15 L4**	**–**	**BN 100LB 4**	**–**	–	–	206000	243000	90000	388
0.28	72300	1.7	4950	–	**3/V 16 L4**	**–**	**BN 100LB 4**	**–**	–	–	345000	385000	150000	400
0.31	63800	0.9	4536	–	**3/V 13 L4**	**–**	**BN 100LB 4**	**–**	–	–	192000	231000	80000	364
0.33	60600	1.4	4312	–	**3/V 14 L4**	**–**	**BN 100LB 4**	**–**	–	–	206000	243000	90000	376
0.34	60900	1.7	4171	–	**3/V 15 L4**	**–**	**BN 100LB 4**	**–**	–	–	206000	243000	90000	388
0.34	60900	2.3	4171	–	**3/V 16 L4**	**–**	**BN 100LB 4**	**–**	–	–	345000	385000	150000	400
0.35	56900	1.0	4046	–	**3/V 13 L4**	**–**	**BN 100LB 4**	**–**	–	–	192000	231000	80000	364
0.35	60500	1.2	3993	–	**3/V 14 L4**	**–**	**BN 100LB 4**	**–**	–	–	206000	243000	90000	376
0.40	53900	1.1	3515	–	**3/V 13 L4**	**–**	**BN 100LB 4**	**–**	–	–	192000	231000	80000	364
0.40	51300	2.7	3514	–	**3/V 16 L4**	**–**	**BN 100LB 4**	**–**	–	–	345000	385000	150000	400
0.43	50000	1.1	3263	–	**3/V 13 L4**	**–**	**BN 100LB 4**	**–**	–	–	192000	231000	80000	364
0.43	47500	2.9	3250	–	**3/V 16 L4**	**–**	**BN 100LB 4**	**–**	–	–	345000	385000	150000	400
0.44	49400	0.9	3222	–	**3/V 11 L4**	**–**	**BN 100LB 4**	**–**	–	–	157000	195000	65000	352
0.44	48200	1.7	3182	–	**3/V 14 L4**	**–**	**BN 100LB 4**	**–**	–	–	206000	243000	90000	376
0.49	43700	1.1	2887	–	**3/V 11 L4**	**–**	**BN 100LB 4**	**–**	–	–	157000	195000	65000	352
0.51	40600	2.0	2782	–	**3/V 14 L4**	**–**	**BN 100LB 4**	**–**	–	–	206000	243000	90000	376
0.51	39000	1.4	2773	–	**3/V 13 L4**	**–**	**BN 100LB 4**	**–**	–	–	192000	231000	80000	364
0.51	40000	2.9	2738	–	**3/V 16 L4**	**–**	**BN 100LB 4**	**–**	–	–	345000	385000	150000	400
0.56	38500	1.3	2510	–	**3/V 11 L4**	**–**	**BN 100LB 4**	**–**	–	–	157000	195000	65000	352
0.56	35200	2.4	2504	–	**3/V 14 L4**	**–**	**BN 100LB 4**	**–**	–	–	206000	243000	90000	376
0.58	33800	1.4	2430	–	**3/V 13 L3**	**–**	**BN 100LB 4**	**–**	–	–	192000	231000	80000	364
0.61	32400	1.0	2329	–	**3/V 11 L3**	**–**	**BN 100LB 4**	**–**	–	–	157000	195000	65000	352
0.61	32300	2.1	2318	–	**3/V 14 L3**	**–**	**BN 100LB 4**	**–**	–	–	206000	243000	90000	376
0.64	33900	1.0	2209	–	**3/V 10 L4**	**–**	**BN 100LB 4**	**–**	–	–	133000	166000	65000	340
0.64	33900	1.0	2209	–	**3/V 10 L4**	**–**	**BN 100LB 4**	**–**	–	–	133000	166000	65000	340
0.70	28100	2.1	2019	–	**3/V 13 L3**	**–**	**BN 100LB 4**	**–**	–	–	192000	231000	80000	364
0.70	30900	1.0	2016	–	**3/V 10 L4**	**–**	**BN 100LB 4**	**–**	–	–	133000	166000	65000	340
0.70	30900	1.0	2016	–	**3/V 10 L4**	**–**	**BN 100LB 4**	**–**	–	–	133000	166000	65000	340
0.71	27800	2.6	1994	–	**3/V 14 L3**	**–**	**BN 100LB 4**	**–**	–	–	206000	243000	90000	376
0.72	27300	1.6	1963	–	**3/V 11 L3**	**–**	**BN 100LB 4**	**–**	–	–	157000	195000	65000	352
0.77	28000	1.0	1826	–	**3/V 10 L4**	**–**	**BN 100LB 4**	**–**	–	–	133000	166000	65000	340
0.77	28000	1.0	1826	–	**3/V 10 L4**	**–**	**BN 100LB 4**	**–**	–	–	133000	166000	65000	340
0.79	24300	0.9	1792	–	**3/V 09 L3**	**–**	**BN 100LB 4**	**–**	–	–	110000	145000	36000	352
0.84	24100	2.4	1682	–	**3/V 13 L3**	**–**	**BN 100LB 4**	**–**	–	–	192000	231000	80000	364
0.85	25700	1.3	1657	–	**3/V 10 L4**	**–**	**BN 100LB 4**	**–**	–	–	133000	166000	65000	340
0.85	25700	1.3	1657	–	**3/V 10 L4**	**–**	**BN 100LB 4**	**–**	–	–	133000	166000	65000	340
0.86	23400	1.8	1636	–	**3/V 11 L3**	**–**	**BN 100LB 4**	**–**	–	–	157000	195000	65000	352
0.89	22100	2.6	1589	–	**3/V 14 L3**	**–**	**BN 100LB 4**	**–**	–	–	206000	243000	90000	376
0.99	20300	2.8	1418	–	**3/V 13 L3**	**–**	**BN 100LB 4**	**–**	–	–	190500	225400	78500	364
1.0	20500	1.1	1411	–	**3/V 10 L3**	**–**	**BN 100LB 4**	**–**	–	–	130300	163800	63700	340
1.0	19700	2.3	1378	–	**3/V 11 L3**	**–**	**BN 100LB 4**	**–**	–	–	152900	190400	63200	352
1.1	18600	2.6	1339	–	**3/V 14 L3**	**–**	**BN 100LB 4**	**–**	–	–	199900	234700	86700	376
1.1	18500	2.9	1291	–	**3/V 13 L3**	**–**	**BN 100LB 4**	**–**	–	–	185200	219200	76100	364
1.1	18700	1.2	1288	–	**3/V 09 L3**	**–**	**BN 100LB 4**	**–**	–	–	107000	138000	34200	352
1.1	18200	1.9	1274	–	**3/V 11 L3**	**–**	**BN 100LB 4**	**–**	–	–	149300	186000	61600	352
1.1	17800	1.2	1227	–	**3/V 10 L3**	**–**	**BN 100LB 4**	**–**	–	–	124900	157100	60800	340
1.2	17400	0.9	1159	–	**3/V 09 L3**	**–**	**BN 100LB 4**	**–**	–	–	103600	133700	33000	352
1.3	16200	1.8	1120	–	**3/V 10 L3**	**–**	**BN 100LB 4**	**–**	–	–	121600	152800	59000	340
1.4	14500	1.0	1015	–	**3/V 07 L3**	**–**	**BN 100LB 4**	**–**	45400	57000	98000	128400	39500	316
1.4	14000	2.6	1004	–	**3/V 11 L3**	**–**	**BN 100LB 4**	**–**	–	–	139000	173200	56900	352
1.4	14500	1.2	1004	–	**3/V 09 L3**	**–**	**BN 100LB 4**	**–**	–	–	99300	128000	31500	352
1.4	14500	2.2	1004	–	**3/V 10 L3**	**–**	**BN 100LB 4**	**–**	–	–	117600	147900	56900	340

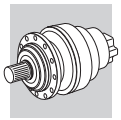

P_1 = 3 kW

n_2	M_{n2}	f_S	i	Pt					Rn_2 [N]					
min^{-1}	Nm			kW					MC/PC	MZ/PZ	HC	HZ	FZ	
1.5	13300	0.9	920	–	**3/V 07 L3**	**–**	**BN 100LB 4**	**–**	44000	55200	95200	124700	38200	316
1.5	13900	1.6	920	–	**3/V 10 L3**	**–**	**BN 100LB 4**	**–**	–	–	114600	144100	55200	340
1.7	12600	1.6	840	–	**3/V 09 L3**	**–**	**BN 100LB 4**	**–**	–	–	94100	121400	29700	352
1.8	11600	1.8	800	–	**3/V 09 L3**	**–**	**BN 100LB 4**	**–**	–	–	92700	119600	29200	352
1.9	11000	1.3	761	–	**3/V 07 L3**	**–**	**BN 100LB 4**	**–**	41300	51800	89900	117800	35900	316
1.9	11500	1.3	761	–	**3/V 09 L3**	**–**	**BN 100LB 4**	**–**	–	–	91300	117800	28700	352
2.2	9480	1.5	655	–	**3/V 07 L3**	**–**	**BN 100LB 4**	**–**	39300	49300	85900	112600	34100	316
2.2	9850	1.8	655	–	**3/V 09 L3**	**–**	**BN 100LB 4**	**–**	–	–	87300	112600	27300	352
2.5	8990	1.0	569	–	**3/V 06 L3**	**–**	**BN 100LB 4**	**–**	33700	38200	76600	89200	25300	304
2.7	8330	0.9	527	–	**3/V 06 L3**	**–**	**BN 100LB 4**	**–**	32900	37200	74900	87200	24700	304
2.8	8020	1.7	507	–	**3/V 07 L3**	**–**	**BN 100LB 4**	**–**	36100	45300	79600	104300	31400	316
3.1	7270	1.7	460	–	**3/V 07 L3**	**–**	**BN 100LB 4**	**–**	34900	43800	77300	101300	30400	316
3.2	6650	2.7	442	–	**3/V 09 L3**	**–**	**BN 100LB 4**	**–**	–	–	77600	100100	24000	352
3.2	7740	1.2	439	–	**–**	**3/A 07 L2**	**BN 100LB 4**	**M 3LB 4**	34400	43100	76200	99900	29900	317
3.2	7670	1.0	435	–	**–**	**3/A 06 L2**	**BN 100LB 4**	**M 3LB 4**	30800	34900	70600	82300	23200	305
3.3	6820	1.3	427	–	**3/V 06 L3**	**–**	**BN 100LB 4**	**–**	30600	34700	70300	81800	23000	304
3.5	7150	1.3	405	–	**–**	**3/A 07 L2**	**BN 100LB 4**	**M 3LB 4**	33500	42000	74400	97500	29100	317
3.6	6320	1.2	395	–	**3/V 06 L3**	**–**	**BN 100LB 4**	**–**	29900	33800	68700	80000	22400	304
3.6	6320	1.4	386	–	**3/V 07 L3**	**–**	**BN 100LB 4**	**–**	32900	41300	73400	96100	28600	316
3.7	6720	0.9	380	–	**–**	**3/A 06 L2**	**BN 100LB 4**	**M 3LB 4**	29500	33400	67900	79000	22200	305
3.8	5570	2.3	370	–	**3/V 09 L3**	**–**	**BN 100LB 4**	**–**	–	–	73600	94900	22600	352
4.1	6020	1.9	341	–	**–**	**3/A 07 L2**	**BN 100LB 4**	**M 3LB 4**	31600	39700	70700	92600	27500	317
4.4	5660	1.2	321	–	**–**	**3/A 06 L2**	**BN 100LB 4**	**M 3LB 4**	27900	31600	64500	75100	20900	305
5.0	4970	1.7	282	–	**–**	**3/A 07 L2**	**BN 100LB 4**	**M 3LB 4**	29600	37200	66700	87400	25800	317
5.1	4870	1.6	276	–	**–**	**3/A 06 L2**	**BN 100LB 4**	**M 3LB 4**	26500	30000	61600	71800	19900	305
5.3	4710	1.2	267	–	**–**	**3/A 06 L2**	**BN 100LB 4**	**M 3LB 4**	26200	29700	61000	71100	19700	305
5.8	4260	2.1	241	–	**–**	**3/A 07 L2**	**BN 100LB 4**	**M 3LB 4**	28200	35300	63700	83500	24500	317
5.9	4390	1.0	241	–	**–**	**3/A 05 L2**	**BN 100LB 4**	**M 3LB 4**	20300	23500	36200	43500	13000	293
6.3	3930	2.3	223	–	**–**	**3/A 07 L2**	**BN 100LB 4**	**M 3LB 4**	27400	34400	62200	81500	23800	317
6.4	3900	1.7	221	–	**–**	**3/A 06 L2**	**BN 100LB 4**	**M 3LB 4**	24600	27900	57700	67100	18500	305
6.9	3740	0.9	205	–	**–**	**3/A 04 L2**	**BN 100LB 4**	**M 3LB 4**	19300	22300	34500	41500	12400	281
7.1	3500	1.6	198	–	**–**	**3/A 06 L2**	**BN 100LB 4**	**M 3LB 4**	23700	26900	55800	65000	17800	305
7.1	3490	2.5	198	–	**–**	**3/A 07 L2**	**BN 100LB 4**	**M 3LB 4**	26300	33000	60000	78600	22900	317
7.4	3350	2.3	190	–	**–**	**3/A 06 L2**	**BN 100LB 4**	**M 3LB 4**	23400	26500	55100	64200	17600	305
8.0	3200	1.1	175	–	**–**	**3/A 05 L2**	**BN 100LB 4**	**M 3LB 4**	18300	21100	32900	39600	11700	293
8.1	3170	0.9	174	–	**–**	**3/A 04 L2**	**BN 100LB 4**	**M 3LB 4**	18200	21100	32800	39500	11700	281
8.6	2890	2.2	164	–	**–**	**3/A 06 L2**	**BN 100LB 4**	**M 3LB 4**	22300	25200	52700	61400	16700	305
8.7	2960	1.0	162	–	**–**	**3/A 04 L2**	**BN 100LB 4**	**M 3LB 4**	17800	20600	32100	38700	11400	281
8.7	2960	1.0	162	–	**–**	**3/A 05 L2**	**BN 100LB 4**	**M 3LB 4**	17800	20600	32100	38700	11400	293
10.0	2570	1.4	141	–	**–**	**3/A 05 L2**	**BN 100LB 4**	**M 3LB 4**	17000	19600	30800	37000	10900	293
10.9	2360	1.2	129	–	**–**	**3/A 04 L2**	**BN 100LB 4**	**M 3LB 4**	16500	19100	30000	36100	10600	281
11.3	2270	2.4	125	–	**–**	**3/A 06 L2**	**BN 100LB 4**	**M 3LB 4**	20300	23000	48600	56500	15300	305
11.6	2210	1.6	121	–	**–**	**3/A 05 L2**	**BN 100LB 4**	**M 3LB 4**	16200	18700	29400	35400	10400	293
12.1	2130	1.1	117	–	**–**	**3/A 04 L2**	**BN 100LB 4**	**M 3LB 4**	16000	18500	29100	35000	10300	281
13.6	1890	1.6	104	–	**–**	**3/A 05 L2**	**BN 100LB 4**	**M 3LB 4**	15300	17700	28100	33800	9840	293
13.8	1860	1.4	102	–	**–**	**3/A 04 L2**	**BN 100LB 4**	**M 3LB 4**	15300	17600	27900	33600	9790	281
14.6	1770	1.0	96.9	–	**–**	**3/A 03 L2**	**BN 100LB 4**	**M 3LB 4**	15000	17300	27500	33100	9630	269
15.5	1650	1.4	90.7	–	**–**	**3/A 04 L2**	**BN 100LB 4**	**M 3LB 4**	14700	17000	27000	32500	9420	281
15.9	1610	1.0	88.5	–	**–**	**3/A 03 L2**	**BN 100LB 4**	**M 3LB 4**	14600	16800	26800	32200	9340	269
16.5	1560	2.3	85.6	–	**–**	**3/A 05 L2**	**BN 100LB 4**	**M 3LB 4**	14400	16600	26500	31900	9240	293
17.3	1490	1.6	81.7	–	**–**	**3/A 04 L2**	**BN 100LB 4**	**M 3LB 4**	14200	16400	26200	31500	9100	281
18.6	1380	2.2	75.8	–	**–**	**3/A 05 L2**	**BN 100LB 4**	**M 3LB 4**	13800	16000	25600	30800	8870	293
19.3	1330	1.3	73.2	–	**–**	**3/A 03 L2**	**BN 100LB 4**	**M 3LB 4**	13700	15800	25300	30400	8770	269
19.4	1320	2.5	72.5	–	**–**	**3/A 05 L2**	**BN 100LB 4**	**M 3LB 4**	13600	15700	25200	30400	8740	293
20.6	1250	2.0	68.4	–	**–**	**3/A 04 L2**	**BN 100LB 4**	**M 3LB 4**	13400	15400	24800	29800	8580	281
22.4	1150	1.4	62.9	–	**–**	**3/A 03 L2**	**BN 100LB 4**	**M 3LB 4**	13000	15000	24200	29100	8340	269
22.5	1140	2.8	62.6	–	**–**	**3/A 05 L2**	**BN 100LB 4**	**M 3LB 4**	13000	15000	24200	29100	8330	293
22.6	1140	2.5	62.4	–	**–**	**3/A 04 L2**	**BN 100LB 4**	**M 3LB 4**	13000	15000	24100	29000	8320	281
23.7	1080	1.2	59.4	–	**–**	**3/A 01 L2**	**BN 100LB 4**	**M 3LB 4**	4150	4150	11600	13400	2730	259
25.9	990	2.4	54.5	–	**–**	**3/A 04 L2**	**BN 100LB 4**	**M 3LB 4**	12400	14300	23200	27900	7950	281
26.0	990	1.2	54.2	–	**–**	**3/A 01 L2**	**BN 100LB 4**	**M 3LB 4**	4020	4020	11300	13000	2650	259
26.9	960	1.7	52.5	–	**–**	**3/A 03 L2**	**BN 100LB 4**	**M 3LB 4**	12200	14100	22900	27600	7850	269
26.9	960	1.7	52.5	–	**–**	**3/A 03 L2**	**BN 100LB 4**	**M 3LB 4**	12200	14100	22900	27600	7850	269
28.4	910	2.5	49.7	–	**–**	**3/A 04 L2**	**BN 100LB 4**	**M 3LB 4**	12000	13900	22500	27100	7710	281
28.7	890	0.9	49.1	–	**–**	**3/A 01 L2**	**BN 100LB 4**	**M 3LB 4**	3890	3890	11000	12600	2560	259

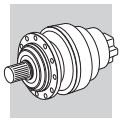

A

P_1 = 3 kW

n_2 min^{-1}	M_{n2} Nm	f_S	i	Pt kW					Rn_2 [N] MC/PC	MZ/PZ	HC	HZ	FZ	
32	800	1.2	43.9	–	–	**3/A 01 L2**	**BN 100LB 4**	**M 3LB 4**	3750	3750	10600	12200	2470	259
32	790	2.3	43.4	–	–	**3/A 03 L2**	**BN 100LB 4**	**M 3LB 4**	11500	13300	21600	26000	7370	269
35	740	2.2	40.5	–	–	**3/A 03 L2**	**BN 100LB 4**	**M 3LB 4**	11200	13000	21200	25500	7200	269
35	730	1.2	40.1	–	–	**3/A 01 L2**	**BN 100LB 4**	**M 3LB 4**	3640	3640	10300	11900	2390	259
39	650	1.2	35.8	–	–	**3/A 01 L2**	**BN 100LB 4**	**M 3LB 4**	3500	3500	10000	11500	2300	259
42	610	2.9	33.5	–	–	**3/A 03 L2**	**BN 100LB 4**	**M 3LB 4**	10500	12200	20000	24100	6760	269
44	580	1.1	31.7	–	–	**3/A 00 L2**	**BN 100LB 4**	**M 3LB 4**	3370	3370	9650	11100	2210	249
45	570	2.1	31.2	–	–	**3/A 01 L2**	**BN 100LB 4**	**M 3LB 4**	3340	3340	9600	11000	2200	259
49	530	3.0	28.8	–	–	**3/A 03 L2**	**BN 100LB 4**	**M 3LB 4**	10000	11600	19100	23000	6430	269
60	430	1.4	23.4	–	–	**3/A 00 L2**	**BN 100LB 4**	**M 3LB 4**	3040	3040	8810	10100	2000	249
61	420	2.1	23.0	–	–	**3/A 01 L2**	**BN 100LB 4**	**M 3LB 4**	3020	3020	8760	10100	1990	259
61	420	3.0	23.0	–	–	**3/A 03 L2**	**BN 100LB 4**	**M 3LB 4**	9290	10700	17900	21500	5960	269
73	355	3.0	19.4	–	–	**3/A 03 L2**	**BN 100LB 4**	**M 3LB 4**	8790	10100	17000	20500	5640	269
74	350	1.3	19.1	–	–	**3/A 00 L2**	**BN 100LB 4**	**M 3LB 4**	2840	2840	8290	9530	1870	249
75	345	2.1	18.8	–	–	**3/A 01 L2**	**BN 100LB 4**	**M 3LB 4**	2830	2830	8250	9470	1860	259

P_1 = 4 kW

n_2 min^{-1}	M_{n2} Nm	f_S	i	Pt kW					Rn_2 [N] MC/PC	MZ/PZ	HC	HZ	FZ	
0.27	103200	1.0	5234	–	**3/V 15 L4**	–	**BN 112M 4**	–	–	–	206000	243000	90000	388
0.29	97600	1.1	4950	–	**3/V 15 L4**	–	**BN 112M 4**	–	–	–	206000	243000	90000	388
0.29	97600	1.3	4950	–	**3/V 16 L4**	–	**BN 112M 4**	–	–	–	345000	385000	150000	400
0.32	83300	2.4	4449	–	**3/V 17 L4**	–	**BN 112M 4**	–	–	–	442000	470000	150000	410
0.33	81800	1.0	4312	–	**3/V 14 L4**	–	**BN 112M 4**	–	–	–	206000	243000	90000	376
0.34	82200	1.3	4171	–	**3/V 15 L4**	–	**BN 112M 4**	–	–	–	206000	243000	90000	388
0.34	82200	1.7	4171	–	**3/V 16 L4**	–	**BN 112M 4**	–	–	–	345000	385000	150000	400
0.36	81700	0.9	3993	–	**3/V 14 L4**	–	**BN 112M 4**	–	–	–	206000	243000	90000	376
0.41	69300	2.0	3514	–	**3/V 16 L4**	–	**BN 112M 4**	–	–	–	345000	385000	150000	400
0.44	64100	2.1	3250	–	**3/V 16 L4**	–	**BN 112M 4**	–	–	–	345000	385000	150000	400
0.45	65100	1.2	3182	–	**3/V 14 L4**	–	**BN 112M 4**	–	–	–	206000	243000	90000	376
0.51	54800	1.5	2782	–	**3/V 14 L4**	–	**BN 112M 4**	–	–	–	206000	243000	90000	376
0.52	52600	1.1	2773	–	**3/V 13 L4**	–	**BN 112M 4**	–	–	–	192000	231000	80000	364
0.52	54000	2.1	2738	–	**3/V 16 L4**	–	**BN 112M 4**	–	–	–	345000	385000	150000	400
0.57	52000	0.9	2510	–	**3/V 11 L4**	–	**BN 112M 4**	–	–	–	157000	195000	65000	352
0.57	47500	1.8	2504	–	**3/V 14 L4**	–	**BN 112M 4**	–	–	–	206000	243000	90000	376
0.59	45700	1.1	2430	–	**3/V 13 L3**	–	**BN 112M 4**	–	–	–	192000	231000	80000	364
0.62	43600	1.5	2318	–	**3/V 14 L3**	–	**BN 112M 4**	–	–	–	206000	243000	90000	376
0.71	38000	1.5	2019	–	**3/V 13 L3**	–	**BN 112M 4**	–	–	–	192000	231000	80000	364
0.72	37500	1.9	1994	–	**3/V 14 L3**	–	**BN 112M 4**	–	–	–	206000	243000	90000	376
0.73	36900	1.2	1963	–	**3/V 11 L3**	–	**BN 112M 4**	–	–	–	157000	195000	65000	352
0.85	32500	1.8	1682	–	**3/V 13 L3**	–	**BN 112M 4**	–	–	–	192000	231000	80000	364
0.86	32100	2.4	1662	–	**3/V 14 L3**	–	**BN 112M 4**	–	–	–	206000	243000	90000	376
0.86	34700	1.0	1657	–	**3/V 10 L4**	–	**BN 112M 4**	–	–	–	133000	166000	65000	340
0.86	34700	1.0	1657	–	**3/V 10 L4**	–	**BN 112M 4**	–	–	–	133000	166000	65000	340
0.87	31600	1.4	1636	–	**3/V 11 L3**	–	**BN 112M 4**	–	–	–	157000	195000	65000	352
0.90	29900	1.9	1589	–	**3/V 14 L3**	–	**BN 112M 4**	–	–	–	206000	243000	90000	376
1.0	27400	2.1	1418	–	**3/V 13 L3**	–	**BN 112M 4**	–	–	–	190500	225400	78500	364
1.0	26600	1.7	1378	–	**3/V 11 L3**	–	**BN 112M 4**	–	–	–	152900	190400	63200	352
1.1	25200	1.9	1339	–	**3/V 14 L3**	–	**BN 112M 4**	–	–	–	199900	234700	86700	376
1.1	25600	2.4	1324	–	**3/V 14 L3**	–	**BN 112M 4**	–	–	–	199300	233900	86300	376
1.1	24900	2.1	1291	–	**3/V 13 L3**	–	**BN 112M 4**	–	–	–	185200	219200	76100	364
1.1	24600	1.4	1274	–	**3/V 11 L3**	–	**BN 112M 4**	–	–	–	149300	186000	61600	352
1.2	24000	0.9	1227	–	**3/V 10 L3**	–	**BN 112M 4**	–	–	–	124900	157100	60800	340
1.3	21900	1.3	1120	–	**3/V 10 L3**	–	**BN 112M 4**	–	–	–	121600	152800	59000	340
1.3	21500	2.4	1116	–	**3/V 14 L3**	–	**BN 112M 4**	–	–	–	189300	222200	81500	376
1.3	21000	2.4	1088	–	**3/V 13 L3**	–	**BN 112M 4**	–	–	–	175900	208200	71900	364
1.4	18900	1.9	1004	–	**3/V 11 L3**	–	**BN 112M 4**	–	–	–	139000	173200	56900	352
1.4	19600	0.9	1004	–	**3/V 09 L3**	–	**BN 112M 4**	–	–	–	99300	128000	31500	352
1.4	19600	1.6	1004	–	**3/V 10 L3**	–	**BN 112M 4**	–	–	–	117600	147900	56900	340
1.6	18700	1.2	920	–	**3/V 10 L3**	–	**BN 112M 4**	–	–	–	114600	144100	55200	340
1.6	17400	2.4	900	–	**3/V 11 L3**	–	**BN 112M 4**	–	–	–	134500	167600	54800	352

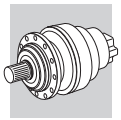

P_1 = 4 kW

n_2	M_{n2}	f_S	i	Pt					Rn_2 [N]					
min^{-1}	Nm			kW					MC/PC	MZ/PZ	HC	HZ	FZ	
1.7	17100	1.2	840	–	**3/V 09 L3**	**–**	**BN 112M 4**	**–**	–	–	94100	121400	29700	352
1.8	15600	1.4	800	–	**3/V 09 L3**	**–**	**BN 112M 4**	**–**	–	–	92700	119600	29200	352
1.9	14900	1.0	761	–	**3/V 07 L3**	**–**	**BN 112M 4**	**–**	41300	51800	89900	117800	35900	316
1.9	15500	0.9	761	–	**3/V 09 L3**	**–**	**BN 112M 4**	**–**	–	–	91300	117800	28700	352
2.2	12800	1.1	655	–	**3/V 07 L3**	**–**	**BN 112M 4**	**–**	39300	49300	85900	112600	34100	316
2.2	13300	1.3	655	–	**3/V 09 L3**	**–**	**BN 112M 4**	**–**	–	–	87300	112600	27300	352
2.8	10800	1.3	507	–	**3/V 07 L3**	**–**	**BN 112M 4**	**–**	36100	45300	79600	104300	31400	316
3.1	9820	1.3	460	–	**3/V 07 L3**	**–**	**BN 112M 4**	**–**	34900	43800	77300	101300	30400	316
3.2	8980	2.0	442	–	**3/V 09 L3**	**–**	**BN 112M 4**	**–**	–	–	77600	100100	24000	352
3.4	9210	1.0	427	–	**3/V 06 L3**	**–**	**BN 112M 4**	**–**	30600	34700	70300	81800	23000	304
3.5	9650	0.9	405	–	**–**	**3/A 07 L2**	**BN 112M 4**	**M 3LC 4**	33500	42000	74400	97500	29100	317
3.7	8540	1.1	386	–	**3/V 07 L3**	**–**	**BN 112M 4**	**–**	32900	41300	73400	96100	28600	316
3.9	7530	1.7	370	–	**3/V 09 L3**	**–**	**BN 112M 4**	**–**	–	–	73600	94900	22600	352
4.2	8130	1.4	341	–	**–**	**3/A 07 L2**	**BN 112M 4**	**M 3LC 4**	31600	39700	70700	92600	27500	317
5.1	6710	1.3	282	–	**–**	**3/A 07 L2**	**BN 112M 4**	**M 3LC 4**	29600	37200	66700	87400	25800	317
5.2	6570	1.2	276	–	**–**	**3/A 06 L2**	**BN 112M 4**	**M 3LC 4**	26500	30000	61600	71800	19900	305
5.9	5750	1.6	241	–	**–**	**3/A 07 L2**	**BN 112M 4**	**M 3LC 4**	28200	35300	63700	83500	24500	317
6.4	5310	1.7	223	–	**–**	**3/A 07 L2**	**BN 112M 4**	**M 3LC 4**	27400	34400	62200	81500	23800	317
6.5	5260	1.2	221	–	**–**	**3/A 06 L2**	**BN 112M 4**	**M 3LC 4**	24600	27900	57700	67100	18500	305
7.2	4720	1.2	198	–	**–**	**3/A 06 L2**	**BN 112M 4**	**M 3LC 4**	23700	26900	55800	65000	17800	305
7.2	4710	1.8	198	–	**–**	**3/A 07 L2**	**BN 112M 4**	**M 3LC 4**	26300	33000	60000	78600	22900	317
7.5	4530	1.7	190	–	**–**	**3/A 06 L2**	**BN 112M 4**	**M 3LC 4**	23400	26500	55100	64200	17600	305
7.9	4290	2.5	180	–	**–**	**3/A 07 L2**	**BN 112M 4**	**M 3LC 4**	25500	32000	58300	76500	22200	317
8.7	3900	1.7	164	–	**–**	**3/A 06 L2**	**BN 112M 4**	**M 3LC 4**	22300	25200	52700	61400	16700	305
9.2	3690	2.4	155	–	**–**	**3/A 07 L2**	**BN 112M 4**	**M 3LC 4**	24300	30500	55800	73100	21100	317
10.2	3360	2.3	141	–	**–**	**3/A 06 L2**	**BN 112M 4**	**M 3LC 4**	21200	24000	50400	58700	15900	305
10.2	3460	1.0	141	–	**–**	**3/A 05 L2**	**BN 112M 4**	**M 3LC 4**	17000	19600	30800	37000	10900	293
11.5	3070	1.8	125	–	**–**	**3/A 06 L2**	**BN 112M 4**	**M 3LC 4**	20300	23000	48600	56500	15300	305
11.8	2980	1.2	121	–	**–**	**3/A 05 L2**	**BN 112M 4**	**M 3LC 4**	16200	18700	29400	35400	10400	293
12.7	2670	2.3	112	–	**–**	**3/A 06 L2**	**BN 112M 4**	**M 3LC 4**	19600	22200	47100	54800	14700	305
13.8	2550	1.2	104	–	**–**	**3/A 05 L2**	**BN 112M 4**	**M 3LC 4**	15300	17700	28100	33800	9840	293
14.0	2510	1.0	102	–	**–**	**3/A 04 L2**	**BN 112M 4**	**M 3LC 4**	15300	17600	27900	33600	9790	281
14.6	2420	2.2	98.3	–	**–**	**3/A 06 L2**	**BN 112M 4**	**M 3LC 4**	18800	21300	45200	52700	14100	305
15.8	2230	1.1	90.7	–	**–**	**3/A 04 L2**	**BN 112M 4**	**M 3LC 4**	14700	17000	27000	32500	9420	281
16.2	2180	2.8	88.5	–	**–**	**3/A 06 L2**	**BN 112M 4**	**M 3LC 4**	18100	20600	43800	51000	13600	305
16.7	2110	1.7	85.6	–	**–**	**3/A 05 L2**	**BN 112M 4**	**M 3LC 4**	14400	16600	26500	31900	9240	293
17.5	2010	1.2	81.7	–	**–**	**3/A 04 L2**	**BN 112M 4**	**M 3LC 4**	14200	16400	26200	31500	9100	281
18.9	1860	1.6	75.8	–	**–**	**3/A 05 L2**	**BN 112M 4**	**M 3LC 4**	13800	16000	25600	30800	8870	293
19.5	1800	1.0	73.2	–	**–**	**3/A 03 L2**	**BN 112M 4**	**M 3LC 4**	13700	15800	25300	30400	8770	269
19.7	1790	1.9	72.5	–	**–**	**3/A 05 L2**	**BN 112M 4**	**M 3LC 4**	13600	15700	25200	30400	8740	293
20.9	1680	1.5	68.4	–	**–**	**3/A 04 L2**	**BN 112M 4**	**M 3LC 4**	13400	15400	24800	29800	8580	281
22.7	1550	1.0	62.9	–	**–**	**3/A 03 L2**	**BN 112M 4**	**M 3LC 4**	13000	15000	24200	29100	8340	269
22.8	1540	2.1	62.6	–	**–**	**3/A 05 L2**	**BN 112M 4**	**M 3LC 4**	13000	15000	24200	29100	8330	293
22.9	1540	1.9	62.4	–	**–**	**3/A 04 L2**	**BN 112M 4**	**M 3LC 4**	13000	15000	24100	29000	8320	281
25.1	1400	2.4	57.0	–	**–**	**3/A 05 L2**	**BN 112M 4**	**M 3LC 4**	12600	14500	23500	28300	8070	293
26.2	1340	1.8	54.5	–	**–**	**3/A 04 L2**	**BN 112M 4**	**M 3LC 4**	12400	14300	23200	27900	7950	281
26.9	1310	2.3	53.3	–	**–**	**3/A 05 L2**	**BN 112M 4**	**M 3LC 4**	12300	14200	23000	27700	7890	293
27.2	1290	1.3	52.5	–	**–**	**3/A 03 L2**	**BN 112M 4**	**M 3LC 4**	12200	14100	22900	27600	7850	269
27.2	1290	1.3	52.5	–	**–**	**3/A 03 L2**	**BN 112M 4**	**M 3LC 4**	12200	14100	22900	27600	7850	269
28.8	1220	1.9	49.7	–	**–**	**3/A 04 L2**	**BN 112M 4**	**M 3LC 4**	12000	13900	22500	27100	7710	281
32	1090	2.6	44.3	–	**–**	**3/A 04 L2**	**BN 112M 4**	**M 3LC 4**	11600	13300	21800	26200	7420	281
33	1070	1.7	43.4	–	**–**	**3/A 03 L2**	**BN 112M 4**	**M 3LC 4**	11500	13300	21600	26000	7370	269
35	1000	1.7	40.5	–	**–**	**3/A 03 L2**	**BN 112M 4**	**M 3LC 4**	11200	13000	21200	25500	7200	269
37	960	2.4	39.1	–	**–**	**3/A 04 L2**	**BN 112M 4**	**M 3LC 4**	11100	12800	21000	25200	7120	281
41	870	2.6	35.3	–	**–**	**3/A 04 L2**	**BN 112M 4**	**M 3LC 4**	10700	12400	20300	24500	6880	281
43	820	2.2	33.5	–	**–**	**3/A 03 L2**	**BN 112M 4**	**M 3LC 4**	10500	12200	20000	24100	6760	269
46	770	1.5	31.2	–	**–**	**3/A 01 L2**	**BN 112M 4**	**M 3LC 4**	3340	3340	9600	11000	2200	259
50	710	2.2	28.8	–	**–**	**3/A 03 L2**	**BN 112M 4**	**M 3LC 4**	10000	11600	19100	23000	6430	269
61	580	1.0	23.4	–	**–**	**3/A 00 L2**	**BN 112M 4**	**M 3LC 4**	3040	3040	8810	10100	2000	249
62	570	1.5	23.0	–	**–**	**3/A 01 L2**	**BN 112M 4**	**M 3LC 4**	3020	3020	8760	10100	1990	259
62	560	2.2	23.0	–	**–**	**3/A 03 L2**	**BN 112M 4**	**M 3LC 4**	9290	10700	17900	21500	5960	269
74	480	2.2	19.4	–	**–**	**3/A 03 L2**	**BN 112M 4**	**M 3LC 4**	8790	10100	17000	20500	5640	269
75	470	1.0	19.1	–	**–**	**3/A 00 L2**	**BN 112M 4**	**M 3LC 4**	2840	2840	8290	9530	1870	249
76	465	1.5	18.8	–	**–**	**3/A 01 L2**	**BN 112M 4**	**M 3LC 4**	2830	2830	8250	9470	1860	259

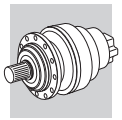

P_1 = 5.5 kW

n_2 min^{-1}	M_{n2} Nm	f_S	i	Pt kW					Rn$_2$ [N] MC/PC	MZ/PZ	HC	HZ	FZ	
0.28	139100	2.0	5099	–	**3/V 18 L4**	**–**	**BN 132S 4**	**–**	–	–	503000	565000	200000	420
0.29	135500	1.1	4970	–	**3/V 17 L4**	**–**	**BN 132S 4**	**–**	–	–	442000	470000	150000	410
0.29	130100	1.0	4950	–	**3/V 16 L4**	**–**	**BN 132S 4**	**–**	–	–	345000	385000	150000	400
0.32	124500	2.9	4457	–	**3/V 19 L4**	**–**	**BN 132S 4**	**–**	–	–	638000	702000	200000	430
0.32	111100	1.8	4449	–	**3/V 17 L4**	**–**	**BN 132S 4**	**–**	–	–	442000	470000	150000	410
0.33	119600	2.3	4386	–	**3/V 18 L4**	**–**	**BN 132S 4**	**–**	–	–	503000	565000	200000	420
0.35	109600	1.0	4171	–	**3/V 15 L4**	**–**	**BN 132S 4**	**–**	–	–	206000	243000	90000	388
0.35	109600	1.3	4171	–	**3/V 16 L4**	**–**	**BN 132S 4**	**–**	–	–	345000	385000	150000	400
0.35	112600	1.6	4129	–	**3/V 17 L4**	**–**	**BN 132S 4**	**–**	–	–	442000	470000	150000	410
0.39	100800	2.8	3696	–	**3/V 18 L4**	**–**	**BN 132S 4**	**–**	–	–	503000	565000	200000	420
0.41	92400	1.5	3514	–	**3/V 16 L4**	**–**	**BN 132S 4**	**–**	–	–	345000	385000	150000	400
0.41	95300	2.9	3495	–	**3/V 18 L4**	**–**	**BN 132S 4**	**–**	–	–	503000	565000	200000	420
0.41	96300	1.0	3489	–	**3/V 15 L4**	**–**	**BN 132S 4**	**–**	–	–	206000	243000	90000	388
0.44	91100	1.2	3300	–	**3/V 15 L4**	**–**	**BN 132S 4**	**–**	–	–	206000	243000	90000	388
0.44	85400	1.6	3250	–	**3/V 16 L4**	**–**	**BN 132S 4**	**–**	–	–	345000	385000	150000	400
0.45	86800	0.9	3182	–	**3/V 14 L4**	**–**	**BN 132S 4**	**–**	–	–	206000	243000	90000	376
0.45	86400	2.2	3168	–	**3/V 17 L4**	**–**	**BN 132S 4**	**–**	–	–	442000	470000	150000	410
0.52	73100	1.1	2782	–	**3/V 14 L4**	**–**	**BN 132S 4**	**–**	–	–	206000	243000	90000	376
0.52	76700	1.4	2780	–	**3/V 15 L4**	**–**	**BN 132S 4**	**–**	–	–	206000	243000	90000	388
0.52	71100	2.3	2773	–	**3/V 17 L4**	**–**	**BN 132S 4**	**–**	–	–	442000	470000	150000	410
0.53	72000	1.6	2738	–	**3/V 16 L4**	**–**	**BN 132S 4**	**–**	–	–	345000	385000	150000	400
0.58	63300	1.3	2504	–	**3/V 14 L4**	**–**	**BN 132S 4**	**–**	–	–	206000	243000	90000	376
0.61	64700	2.1	2343	–	**3/V 16 L4**	**–**	**BN 132S 4**	**–**	–	–	345000	385000	150000	400
0.62	58100	1.1	2318	–	**3/V 14 L3**	**–**	**BN 132S 4**	**–**	–	–	206000	243000	90000	376
0.62	57300	1.5	2318	–	**3/V 15 L3**	**–**	**BN 132S 4**	**–**	–	–	206000	243000	90000	388
0.66	59800	2.1	2167	–	**3/V 16 L4**	**–**	**BN 132S 4**	**–**	–	–	345000	385000	150000	400
0.71	50600	1.1	2019	–	**3/V 13 L3**	**–**	**BN 132S 4**	**–**	–	–	192000	231000	80000	364
0.72	50000	1.4	1994	–	**3/V 14 L3**	**–**	**BN 132S 4**	**–**	–	–	206000	243000	90000	376
0.72	49300	1.9	1994	–	**3/V 15 L3**	**–**	**BN 132S 4**	**–**	–	–	206000	243000	90000	388
0.79	50400	2.1	1826	–	**3/V 16 L4**	**–**	**BN 132S 4**	**–**	–	–	345000	385000	150000	400
0.86	43300	1.3	1682	–	**3/V 13 L3**	**–**	**BN 132S 4**	**–**	–	–	192000	231000	80000	364
0.87	42800	1.8	1662	–	**3/V 14 L3**	**–**	**BN 132S 4**	**–**	–	–	206000	243000	90000	376
0.87	42800	2.3	1662	–	**3/V 15 L3**	**–**	**BN 132S 4**	**–**	–	–	206000	243000	90000	388
0.88	42100	1.0	1636	–	**3/V 11 L3**	**–**	**BN 132S 4**	**–**	–	–	157000	195000	65000	352
0.89	42800	1.1	1620	–	**3/V 13 L3**	**–**	**BN 132S 4**	**–**	–	–	192000	231000	80000	364
0.91	39800	1.4	1589	–	**3/V 14 L3**	**–**	**BN 132S 4**	**–**	–	–	206000	243000	90000	376
0.91	40900	2.7	1589	–	**3/V 16 L3**	**–**	**BN 132S 4**	**–**	–	–	345000	385000	150000	400
1.0	36500	1.6	1418	–	**3/V 13 L3**	**–**	**BN 132S 4**	**–**	–	–	190500	225400	78500	364
1.0	36000	2.4	1400	–	**3/V 15 L3**	**–**	**BN 132S 4**	**–**	–	–	202600	237900	88000	388
1.0	35500	1.3	1378	–	**3/V 11 L3**	**–**	**BN 132S 4**	**–**	–	–	152900	190400	63200	352
1.1	33600	1.4	1339	–	**3/V 14 L3**	**–**	**BN 132S 4**	**–**	–	–	199900	234700	86700	376
1.1	35100	2.8	1329	–	**3/V 15 L3**	**–**	**BN 132S 4**	**–**	–	–	199500	234200	86400	388
1.1	34100	1.8	1324	–	**3/V 14 L3**	**–**	**BN 132S 4**	**–**	–	–	199300	233900	86300	376
1.1	33200	1.6	1291	–	**3/V 13 L3**	**–**	**BN 132S 4**	**–**	–	–	185200	219200	76100	364
1.1	32800	1.1	1274	–	**3/V 11 L3**	**–**	**BN 132S 4**	**–**	–	–	149300	186000	61600	352
1.3	29200	1.0	1120	–	**3/V 10 L3**	**–**	**BN 132S 4**	**–**	–	–	121600	152800	59000	340
1.3	28700	1.8	1116	–	**3/V 14 L3**	**–**	**BN 132S 4**	**–**	–	–	189300	222200	81500	376
1.3	29100	1.5	1103	–	**3/V 11 L3**	**–**	**BN 132S 4**	**–**	–	–	143000	178100	58700	352
1.3	28000	1.8	1088	–	**3/V 13 L3**	**–**	**BN 132S 4**	**–**	–	–	175900	208200	71900	364
1.4	28400	1.9	1009	–	**3/V 13 L3**	**–**	**BN 132S 4**	**–**	–	–	172000	203600	70100	364
1.4	25200	1.4	1004	–	**3/V 11 L3**	**–**	**BN 132S 4**	**–**	–	–	139000	173200	56900	352
1.4	26200	1.2	1004	–	**3/V 10 L3**	**–**	**BN 132S 4**	**–**	–	–	117600	147900	56900	340
1.4	28000	2.2	997	–	**3/V 14 L3**	**–**	**BN 132S 4**	**–**	–	–	183000	214800	78500	376
1.6	23200	1.8	900	–	**3/V 11 L3**	**–**	**BN 132S 4**	**–**	–	–	134500	167600	54800	352
1.6	23600	2.3	893	–	**3/V 14 L3**	**–**	**BN 132S 4**	**–**	–	–	177000	207800	75700	376
1.7	23000	2.3	870	–	**3/V 13 L3**	**–**	**BN 132S 4**	**–**	–	–	164500	194700	66700	364
1.7	23200	1.8	827	–	**3/V 11 L3**	**–**	**BN 132S 4**	**–**	–	–	131100	163400	53300	352
1.8	20900	1.0	800	–	**3/V 09 L3**	**–**	**BN 132S 4**	**–**	–	–	92700	119600	29200	352
1.8	22300	2.2	794	–	**3/V 14 L3**	**–**	**BN 132S 4**	**–**	–	–	170900	200700	72800	376
1.9	22000	1.0	773	–	**3/V 10 L3**	**–**	**BN 132S 4**	**–**	–	–	108700	136700	52100	340
1.9	19600	2.3	741	–	**3/V 13 L3**	**–**	**BN 132S 4**	**–**	–	–	156800	185500	63200	364
2.0	19000	2.1	720	–	**3/V 11 L3**	**–**	**BN 132S 4**	**–**	–	–	125800	156700	50900	352
2.1	20700	1.1	701	–	**3/V 10 L3**	**–**	**BN 132S 4**	**–**	–	–	105600	132800	50400	340
2.1	18400	2.3	695	–	**3/V 14 L3**	**–**	**BN 132S 4**	**–**	–	–	164300	192800	69700	376
2.2	17700	1.0	655	–	**3/V 09 L3**	**–**	**BN 132S 4**	**–**	–	–	87300	112600	27300	352

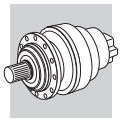

P_1 = 5.5 kW

n_2	M_{n2}	f_S	i	Pt					Rn_2 [N]					
min^{-1}	Nm			kW					MC/PC	MZ/PZ	HC	HZ	FZ	
2.2	18100	2.2	644	–	**3/V 11 L3**	**–**	**BN 132S 4**	**–**	–	–	121700	151600	49000	352
2.3	17500	1.2	614	–	**3/V 10 L3**	**–**	**BN 132S 4**	**–**	–	–	101500	127600	48300	340
2.6	15900	1.6	560	–	**3/V 10 L3**	**–**	**BN 132S 4**	**–**	–	–	98700	124100	46800	340
2.8	14400	0.9	507	–	**3/V 07 L3**	**–**	**BN 132S 4**	**–**	36100	45300	79600	104300	31400	316
2.8	14400	1.0	507	–	**3/V 09 L3**	**–**	**BN 132S 4**	**–**	–	–	80900	104300	25100	352
2.8	14400	1.8	507	–	**3/V 10 L3**	**–**	**BN 132S 4**	**–**	–	–	95800	120500	45300	340
3.1	13100	0.9	460	–	**3/V 07 L3**	**–**	**BN 132S 4**	**–**	34900	43800	77300	101300	30400	316
3.3	12000	1.5	442	–	**3/V 09 L3**	**–**	**BN 132S 4**	**–**	–	–	77600	100100	24000	352
3.3	12400	2.2	436	–	**3/V 10 L3**	**–**	**BN 132S 4**	**–**	–	–	91600	115200	43100	340
3.9	10000	1.3	370	–	**3/V 09 L3**	**–**	**BN 132S 4**	**–**	–	–	73600	94900	22600	352
4.2	10800	1.1	341	–	**–**	**3/A 07 L2**	**BN 132S 4**	**–**	31600	39700	70700	92600	27500	317
5.1	8950	1.0	282	–	**–**	**3/A 07 L2**	**BN 132S 4**	**–**	29600	37200	66700	87400	25800	317
6.0	7670	1.2	241	–	**–**	**3/A 07 L2**	**BN 132S 4**	**–**	28200	35300	63700	83500	24500	317
6.5	7080	1.3	223	–	**–**	**3/A 07 L2**	**BN 132S 4**	**–**	27400	34400	62200	81500	23800	317
6.5	7010	0.9	221	–	**–**	**3/A 06 L2**	**BN 132S 4**	**–**	24600	27900	57700	67100	18500	305
7.3	6280	1.4	198	–	**–**	**3/A 07 L2**	**BN 132S 4**	**–**	26300	33000	60000	78600	22900	317
7.6	6030	1.3	190	–	**–**	**3/A 06 L2**	**BN 132S 4**	**–**	23400	26500	55100	64200	17600	305
8.0	5720	1.9	180	–	**–**	**3/A 07 L2**	**BN 132S 4**	**–**	25500	32000	58300	76500	22200	317
8.8	5200	1.2	164	–	**–**	**3/A 06 L2**	**BN 132S 4**	**–**	22300	25200	52700	61400	16700	305
9.3	4920	1.8	155	–	**–**	**3/A 07 L2**	**BN 132S 4**	**–**	24300	30500	55800	73100	21100	317
10.2	4470	1.7	141	–	**–**	**3/A 06 L2**	**BN 132S 4**	**–**	21200	24000	50400	58700	15900	305
10.3	4460	2.5	140	–	**–**	**3/A 07 L2**	**BN 132S 4**	**–**	23500	29500	54100	70900	20400	317
11.1	4120	2.7	130	–	**–**	**3/A 07 L2**	**BN 132S 4**	**–**	22900	28700	52900	69300	19900	317
11.6	4090	1.3	125	–	**–**	**3/A 06 L2**	**BN 132S 4**	**–**	20300	23000	48600	56500	15300	305
12.8	3570	1.7	112	–	**–**	**3/A 06 L2**	**BN 132S 4**	**–**	19600	22200	47100	54800	14700	305
13.2	3450	2.6	109	–	**–**	**3/A 07 L2**	**BN 132S 4**	**–**	21600	27100	50100	65700	18800	317
13.9	3400	0.9	104	–	**–**	**3/A 05 L2**	**BN 132S 4**	**–**	15300	17700	28100	33800	9840	293
14.7	3230	1.7	98.3	–	**–**	**3/A 06 L2**	**BN 132S 4**	**–**	18800	21300	45200	52700	14100	305
16.3	2910	2.1	88.5	–	**–**	**3/A 06 L2**	**BN 132S 4**	**–**	18100	20600	43800	51000	13600	305
16.8	2810	1.3	85.6	–	**–**	**3/A 05 L2**	**BN 132S 4**	**–**	14400	16600	26500	31900	9240	293
17.7	2670	2.4	81.2	–	**–**	**3/A 06 L2**	**BN 132S 4**	**–**	17600	20000	42700	49700	13200	305
19.0	2490	1.2	75.8	–	**–**	**3/A 05 L2**	**BN 132S 4**	**–**	13800	16000	25600	30800	8870	293
19.9	2380	1.4	72.5	–	**–**	**3/A 05 L2**	**BN 132S 4**	**–**	13600	15700	25200	30400	8740	293
20.6	2290	2.5	69.9	–	**–**	**3/A 06 L2**	**BN 132S 4**	**–**	16800	19000	40800	47500	12600	305
21.0	2250	1.1	68.4	–	**–**	**3/A 04 L2**	**BN 132S 4**	**–**	13400	15400	24800	29800	8580	281
23.0	2060	1.6	62.6	–	**–**	**3/A 05 L2**	**BN 132S 4**	**–**	13000	15000	24200	29100	8330	293
23.1	2050	1.4	62.4	–	**–**	**3/A 04 L2**	**BN 132S 4**	**–**	13000	15000	24100	29000	8320	281
25.2	1870	1.8	57.0	–	**–**	**3/A 05 L2**	**BN 132S 4**	**–**	12600	14500	23500	28300	8070	293
25.9	1830	2.5	55.7	–	**–**	**3/A 06 L2**	**BN 132S 4**	**–**	15500	17600	38100	44400	11700	305
26.4	1790	1.3	54.5	–	**–**	**3/A 04 L2**	**BN 132S 4**	**–**	12400	14300	23200	27900	7950	281
27.0	1750	1.7	53.3	–	**–**	**3/A 05 L2**	**BN 132S 4**	**–**	12300	14200	23000	27700	7890	293
29.0	1630	1.4	49.7	–	**–**	**3/A 04 L2**	**BN 132S 4**	**–**	12000	13900	22500	27100	7710	281
31	1550	2.5	47.2	–	**–**	**3/A 06 L2**	**BN 132S 4**	**–**	14700	16700	36300	42300	11000	305
33	1450	2.0	44.3	–	**–**	**3/A 04 L2**	**BN 132S 4**	**–**	11600	13300	21800	26200	7420	281
33	1440	2.3	44.0	–	**–**	**3/A 05 L2**	**BN 132S 4**	**–**	11500	13300	21700	26100	7400	293
37	1280	1.8	39.1	–	**–**	**3/A 04 L2**	**BN 132S 4**	**–**	11100	12800	21000	25200	7120	281
37	1280	2.4	39.0	–	**–**	**3/A 05 L2**	**BN 132S 4**	**–**	11100	12800	21000	25200	7110	293
41	1160	2.0	35.3	–	**–**	**3/A 04 L2**	**BN 132S 4**	**–**	10700	12400	20300	24500	6880	281
48	990	2.3	30.2	–	**–**	**3/A 04 L2**	**BN 132S 4**	**–**	10200	11700	19400	23300	6530	281
56	840	2.3	25.6	–	**–**	**3/A 04 L2**	**BN 132S 4**	**–**	9630	11100	18500	22200	6180	281

P_1 = 7.5 kW

n_2	M_{n2}	f_S	i	Pt					Rn_2 [N]					
min^{-1}	Nm			kW					MC/PC	MZ/PZ	HC	HZ	FZ	
0.28	183800	2.2	5164	–	**3/V 19 L4**	**–**	**BN 132MA 4**	**–**	–	–	638000	702000	200000	430
0.28	193100	1.5	5099	–	**3/V 18 L4**	**–**	**BN 132MA 4**	**–**	–	–	503000	565000	200000	420
0.32	172900	2.1	4457	–	**3/V 19 L4**	**–**	**BN 132MA 4**	**–**	–	–	638000	702000	200000	430
0.32	154300	1.3	4449	–	**3/V 17 L4**	**–**	**BN 132MA 4**	**–**	–	–	442000	470000	150000	410
0.33	166100	1.7	4386	–	**3/V 18 L4**	**–**	**BN 132MA 4**	**–**	–	–	503000	565000	200000	420
0.35	152300	0.9	4171	–	**3/V 16 L4**	**–**	**BN 132MA 4**	**–**	–	–	345000	385000	150000	400
0.35	156400	1.2	4129	–	**3/V 17 L4**	**–**	**BN 132MA 4**	**–**	–	–	442000	470000	150000	410

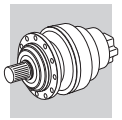

A

P_1 = 7.5 kW

n_2	M_{n2}	f_S	i	Pt					Rn_2 [N]					
min^{-1}	Nm			kW					MC/PC	MZ/PZ	HC	HZ	FZ	
0.35	155100	2.5	4095	–	**3/V 19 L4**	**–**	**BN 132MA 4**	**–**	–	–	638000	702000	200000	430
0.39	140000	2.0	3696	–	**3/V 18 L4**	**–**	**BN 132MA 4**	**–**	–	–	503000	565000	200000	420
0.41	128300	1.1	3514	–	**3/V 16 L4**	**–**	**BN 132MA 4**	**–**	–	–	345000	385000	150000	400
0.41	132400	2.1	3495	–	**3/V 18 L4**	**–**	**BN 132MA 4**	**–**	–	–	503000	565000	200000	420
0.44	118600	1.1	3250	–	**3/V 16 L4**	**–**	**BN 132MA 4**	**–**	–	–	345000	385000	150000	400
0.45	125300	2.9	3231	–	**3/V 19 L4**	**–**	**BN 132MA 4**	**–**	–	–	638000	702000	200000	430
0.45	120000	1.6	3168	–	**3/V 17 L4**	**–**	**BN 132MA 4**	**–**	–	–	442000	470000	150000	410
0.49	111600	2.4	2945	–	**3/V 18 L4**	**–**	**BN 132MA 4**	**–**	–	–	503000	565000	200000	420
0.52	106600	1.0	2780	–	**3/V 15 L4**	**–**	**BN 132MA 4**	**–**	–	–	206000	243000	90000	388
0.52	98700	1.7	2773	–	**3/V 17 L4**	**–**	**BN 132MA 4**	**–**	–	–	442000	470000	150000	410
0.53	100000	1.1	2738	–	**3/V 16 L4**	**–**	**BN 132MA 4**	**–**	–	–	345000	385000	150000	400
0.58	88000	0.9	2504	–	**3/V 14 L4**	**–**	**BN 132MA 4**	**–**	–	–	206000	243000	90000	376
0.58	95600	2.9	2464	–	**3/V 18 L4**	**–**	**BN 132MA 4**	**–**	–	–	503000	565000	200000	420
0.61	89800	1.5	2343	–	**3/V 16 L4**	**–**	**BN 132MA 4**	**–**	–	–	345000	385000	150000	400
0.62	79600	1.0	2318	–	**3/V 15 L3**	**–**	**BN 132MA 4**	**–**	–	–	206000	243000	90000	388
0.63	86900	2.4	2295	–	**3/V 18 L4**	**–**	**BN 132MA 4**	**–**	–	–	503000	565000	200000	420
0.66	83100	1.5	2167	–	**3/V 16 L4**	**–**	**BN 132MA 4**	**–**	–	–	345000	385000	150000	400
0.72	69400	1.0	1994	–	**3/V 14 L3**	**–**	**BN 132MA 4**	**–**	–	–	206000	243000	90000	376
0.72	68500	1.4	1994	–	**3/V 15 L3**	**–**	**BN 132MA 4**	**–**	–	–	206000	243000	90000	388
0.79	70000	1.5	1826	–	**3/V 16 L4**	**–**	**BN 132MA 4**	**–**	–	–	345000	385000	150000	400
0.86	60100	1.0	1682	–	**3/V 13 L3**	**–**	**BN 132MA 4**	**–**	–	–	192000	231000	80000	364
0.87	59400	1.3	1662	–	**3/V 14 L3**	**–**	**BN 132MA 4**	**–**	–	–	206000	243000	90000	376
0.87	59400	1.7	1662	–	**3/V 15 L3**	**–**	**BN 132MA 4**	**–**	–	–	206000	243000	90000	388
0.91	55300	1.0	1589	–	**3/V 14 L3**	**–**	**BN 132MA 4**	**–**	–	–	206000	243000	90000	376
0.91	56800	2.0	1589	–	**3/V 16 L3**	**–**	**BN 132MA 4**	**–**	–	–	345000	385000	150000	400
1.0	50700	1.1	1418	–	**3/V 13 L3**	**–**	**BN 132MA 4**	**–**	–	–	190500	225400	78500	364
1.0	50100	1.7	1400	–	**3/V 15 L3**	**–**	**BN 132MA 4**	**–**	–	–	202600	237900	88000	388
1.0	49300	0.9	1378	–	**3/V 11 L3**	**–**	**BN 132MA 4**	**–**	–	–	152900	190400	63200	352
1.1	46600	1.0	1339	–	**3/V 14 L3**	**–**	**BN 132MA 4**	**–**	–	–	199900	234700	86700	376
1.1	48800	2.0	1329	–	**3/V 15 L3**	**–**	**BN 132MA 4**	**–**	–	–	199500	234200	86400	388
1.1	47300	1.3	1324	–	**3/V 14 L3**	**–**	**BN 132MA 4**	**–**	–	–	199300	233900	86300	376
1.1	47300	2.4	1324	–	**3/V 16 L3**	**–**	**BN 132MA 4**	**–**	–	–	331300	368500	143900	400
1.1	46100	1.1	1291	–	**3/V 13 L3**	**–**	**BN 132MA 4**	**–**	–	–	185200	219200	76100	364
1.3	41100	2.2	1120	–	**3/V 15 L3**	**–**	**BN 132MA 4**	**–**	–	–	189500	222500	81600	388
1.3	39900	1.3	1116	–	**3/V 14 L3**	**–**	**BN 132MA 4**	**–**	–	–	189300	222200	81500	376
1.3	40500	1.1	1103	–	**3/V 11 L3**	**–**	**BN 132MA 4**	**–**	–	–	143000	178100	58700	352
1.3	38900	1.3	1088	–	**3/V 13 L3**	**–**	**BN 132MA 4**	**–**	–	–	175900	208200	71900	364
1.4	39400	1.4	1009	–	**3/V 13 L3**	**–**	**BN 132MA 4**	**–**	–	–	172000	203600	70100	364
1.4	35000	1.0	1004	–	**3/V 11 L3**	**–**	**BN 132MA 4**	**–**	–	–	139000	173200	56900	352
1.4	38900	1.6	997	–	**3/V 14 L3**	**–**	**BN 132MA 4**	**–**	–	–	183000	214800	78500	376
1.4	38900	2.4	997	–	**3/V 15 L3**	**–**	**BN 132MA 4**	**–**	–	–	183000	214800	78500	388
1.6	32200	1.3	900	–	**3/V 11 L3**	**–**	**BN 132MA 4**	**–**	–	–	134500	167600	54800	352
1.6	32800	1.7	893	–	**3/V 14 L3**	**–**	**BN 132MA 4**	**–**	–	–	177000	207800	75700	376
1.7	31900	1.7	870	–	**3/V 13 L3**	**–**	**BN 132MA 4**	**–**	–	–	164500	194700	66700	364
1.7	32800	2.5	840	–	**3/V 15 L3**	**–**	**BN 132MA 4**	**–**	–	–	173800	204100	74200	388
1.7	32300	1.3	827	–	**3/V 11 L3**	**–**	**BN 132MA 4**	**–**	–	–	131100	163400	53300	352
1.8	31000	1.6	794	–	**3/V 14 L3**	**–**	**BN 132MA 4**	**–**	–	–	170900	200700	72800	376
1.9	27200	1.7	741	–	**3/V 13 L3**	**–**	**BN 132MA 4**	**–**	–	–	156800	185500	63200	364
2.0	26400	1.5	720	–	**3/V 11 L3**	**–**	**BN 132MA 4**	**–**	–	–	125800	156700	50900	352
2.1	25500	1.7	695	–	**3/V 14 L3**	**–**	**BN 132MA 4**	**–**	–	–	164300	192800	69700	376
2.2	25200	1.6	644	–	**3/V 11 L3**	**–**	**BN 132MA 4**	**–**	–	–	121700	151600	49000	352
2.6	22100	1.2	560	–	**3/V 10 L3**	**–**	**BN 132MA 4**	**–**	–	–	98700	124100	46800	340
2.8	20000	1.3	507	–	**3/V 10 L3**	**–**	**BN 132MA 4**	**–**	–	–	95800	120500	45300	340
3.3	16600	1.1	442	–	**3/V 09 L3**	**–**	**BN 132MA 4**	**–**	–	–	77600	100100	24000	352
3.3	17200	1.5	436	–	**3/V 10 L3**	**–**	**BN 132MA 4**	**–**	–	–	91600	115200	43100	340
3.9	13900	0.9	370	–	**3/V 09 L3**	**–**	**BN 132MA 4**	**–**	–	–	73600	94900	22600	352
6.5	9840	0.9	223	–	**–**	**3/A 07 L2**	**BN 132MA 4**	**M 4LA 4**	27400	34400	62200	81500	23800	317
7.3	8720	1.0	198	–	**–**	**3/A 07 L2**	**BN 132MA 4**	**M 4LA 4**	26300	33000	60000	78600	22900	317
7.6	8380	0.9	190	–	**–**	**3/A 06 L2**	**BN 132MA 4**	**M 4LA 4**	23400	26500	55100	64200	17600	305
8.0	7950	1.4	180	–	**–**	**3/A 07 L2**	**BN 132MA 4**	**M 4LA 4**	25500	32000	58300	76500	22200	317
9.3	6840	1.3	155	–	**–**	**3/A 07 L2**	**BN 132MA 4**	**M 4LA 4**	24300	30500	55800	73100	21100	317
10.2	6210	1.2	141	–	**–**	**3/A 06 L2**	**BN 132MA 4**	**M 4LA 4**	21200	24000	50400	58700	15900	305
10.3	6190	1.8	140	–	**–**	**3/A 07 L2**	**BN 132MA 4**	**M 4LA 4**	23500	29500	54100	70900	20400	317
11.1	5720	1.9	130	–	**–**	**3/A 07 L2**	**BN 132MA 4**	**M 4LA 4**	22900	28700	52900	69300	19900	317
11.6	5680	1.0	125	–	**–**	**3/A 06 L2**	**BN 132MA 4**	**M 4LA 4**	20300	23000	48600	56500	15300	305

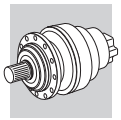

P_1 = 7.5 kW

n_2 min^{-1}	M_{n2} Nm	f_S	i	Pt kW					Rn$_2$ [N] MC/PC	MZ/PZ	HC	HZ	FZ	
12.8	4950	1.2	112	–	–	**3/A 06 L2**	**BN 132MA 4**	**M 4LA 4**	19600	22200	47100	54800	14700	305
13.2	4800	1.8	109	–	–	**3/A 07 L2**	**BN 132MA 4**	**M 4LA 4**	21600	27100	50100	65700	18800	317
14.7	4480	1.2	98.3	–	–	**3/A 06 L2**	**BN 132MA 4**	**M 4LA 4**	18800	21300	45200	52700	14100	305
16.3	4040	1.5	88.5	–	–	**3/A 06 L2**	**BN 132MA 4**	**M 4LA 4**	18100	20600	43800	51000	13600	305
16.4	4000	2.6	87.7	–	–	**3/A 07 L2**	**BN 132MA 4**	**M 4LA 4**	20100	25200	47000	61600	17500	317
16.8	3900	0.9	85.6	–	–	**3/A 05 L2**	**BN 132MA 4**	**M 4LA 4**	14400	16600	26500	31900	9240	293
17.7	3700	1.8	81.2	–	–	**3/A 06 L2**	**BN 132MA 4**	**M 4LA 4**	17600	20000	42700	49700	13200	305
19.9	3310	1.0	72.5	–	–	**3/A 05 L2**	**BN 132MA 4**	**M 4LA 4**	13600	15700	25200	30400	8740	293
20.6	3190	1.8	69.9	–	–	**3/A 06 L2**	**BN 132MA 4**	**M 4LA 4**	16800	19000	40800	47500	12600	305
21.1	3110	2.5	68.3	–	–	**3/A 07 L2**	**BN 132MA 4**	**M 4LA 4**	18500	23200	43600	57200	16100	317
23.0	2850	1.1	62.6	–	–	**3/A 05 L2**	**BN 132MA 4**	**M 4LA 4**	13000	15000	24200	29100	8330	293
23.1	2840	1.0	62.4	–	–	**3/A 04 L2**	**BN 132MA 4**	**M 4LA 4**	13000	15000	24100	29000	8320	281
23.9	2740	2.2	60.1	–	–	**3/A 06 L2**	**BN 132MA 4**	**M 4LA 4**	15900	18100	39000	45500	12000	305
25.1	2610	2.5	57.3	–	–	**3/A 07 L2**	**BN 132MA 4**	**M 4LA 4**	17400	21900	41400	54200	15200	317
25.2	2600	1.3	57.0	–	–	**3/A 05 L2**	**BN 132MA 4**	**M 4LA 4**	12600	14500	23500	28300	8070	293
25.9	2540	1.8	55.7	–	–	**3/A 06 L2**	**BN 132MA 4**	**M 4LA 4**	15500	17600	38100	44400	11700	305
26.4	2490	1.0	54.5	–	–	**3/A 04 L2**	**BN 132MA 4**	**M 4LA 4**	12400	14300	23200	27900	7950	281
27.0	2430	1.3	53.3	–	–	**3/A 05 L2**	**BN 132MA 4**	**M 4LA 4**	12300	14200	23000	27700	7890	293
27.8	2360	2.2	51.7	–	–	**3/A 06 L2**	**BN 132MA 4**	**M 4LA 4**	15200	17200	37300	43400	11400	305
29.0	2270	1.0	49.7	–	–	**3/A 04 L2**	**BN 132MA 4**	**M 4LA 4**	12000	13900	22500	27100	7710	281
31	2150	1.8	47.2	–	–	**3/A 06 L2**	**BN 132MA 4**	**M 4LA 4**	14700	16700	36300	42300	11000	305
33	2020	1.4	44.3	–	–	**3/A 04 L2**	**BN 132MA 4**	**M 4LA 4**	11600	13300	21800	26200	7420	281
33	2010	1.6	44.0	–	–	**3/A 05 L2**	**BN 132MA 4**	**M 4LA 4**	11500	13300	21700	26100	7400	293
35	1870	2.6	41.1	–	–	**3/A 06 L2**	**BN 132MA 4**	**M 4LA 4**	14000	15900	34800	40500	10500	305
37	1780	1.3	39.1	–	–	**3/A 04 L2**	**BN 132MA 4**	**M 4LA 4**	11100	12800	21000	25200	7120	281
37	1780	1.7	39.0	–	–	**3/A 05 L2**	**BN 132MA 4**	**M 4LA 4**	11100	12800	21000	25200	7110	293
41	1610	1.4	35.3	–	–	**3/A 04 L2**	**BN 132MA 4**	**M 4LA 4**	10700	12400	20300	24500	6880	281
41	1590	2.2	34.9	–	–	**3/A 06 L2**	**BN 132MA 4**	**M 4LA 4**	13300	15100	33200	38600	9990	305
44	1490	2.6	32.7	–	–	**3/A 06 L2**	**BN 132MA 4**	**M 4LA 4**	13000	14700	32500	37900	9780	305
45	1470	2.3	32.2	–	–	**3/A 05 L2**	**BN 132MA 4**	**M 4LA 4**	10400	12000	19800	23800	6670	293
48	1380	1.7	30.2	–	–	**3/A 04 L2**	**BN 132MA 4**	**M 4LA 4**	10200	11700	19400	23300	6530	281
52	1260	2.2	27.7	–	–	**3/A 04 L2**	**BN 132MA 4**	**M 4LA 4**	9890	11400	18900	22800	6350	281
52	1260	2.3	27.7	–	–	**3/A 05 L2**	**BN 132MA 4**	**M 4LA 4**	9890	11400	18900	22800	6350	293
52	1260	2.6	27.7	–	–	**3/A 06 L2**	**BN 132MA 4**	**M 4LA 4**	12300	14000	30900	36000	9250	305
56	1170	1.6	25.6	–	–	**3/A 04 L2**	**BN 132MA 4**	**M 4LA 4**	9630	11100	18500	22200	6180	281
65	1010	2.3	22.1	–	–	**3/A 04 L2**	**BN 132MA 4**	**M 4LA 4**	9170	10600	17700	21300	5880	281
65	1010	2.3	22.1	–	–	**3/A 05 L2**	**BN 132MA 4**	**M 4LA 4**	9170	10600	17700	21300	5880	293
77	850	2.2	18.7	–	–	**3/A 04 L2**	**BN 132MA 4**	**M 4LA 4**	8680	10000	16800	20200	5570	281
77	850	2.2	18.7	–	–	**3/A 05 L2**	**BN 132MA 4**	**M 4LA 4**	8680	10000	16800	20200	5570	293

P_1 = 9.2 kW

n_2 min^{-1}	M_{n2} Nm	f_S	i	Pt kW					Rn$_2$ [N] MC/PC	MZ/PZ	HC	HZ	FZ	
0.28	224200	1.8	5164	–	**3/V 19 L4**	–	**BN 132MB 4**	–	–	–	638000	702000	200000	430
0.28	235600	1.2	5099	–	**3/V 18 L4**	–	**BN 132MB 4**	–	–	–	503000	565000	200000	420
0.29	221700	2.5	5040	–	**3/V 21 L4**	–	**BN 132MB 4**	–	–	–	779000	923000	1200000	440
0.32	212800	2.6	4550	–	**3/V 21 L4**	–	**BN 132MB 4**	–	–	–	779000	923000	1200000	440
0.32	210900	1.7	4457	–	**3/V 19 L4**	–	**BN 132MB 4**	–	–	–	638000	702000	200000	430
0.32	188200	1.1	4449	–	**3/V 17 L4**	–	**BN 132MB 4**	–	–	–	442000	470000	150000	410
0.33	202700	1.4	4386	–	**3/V 18 L4**	–	**BN 132MB 4**	–	–	–	503000	565000	200000	420
0.35	190800	1.0	4129	–	**3/V 17 L4**	–	**BN 132MB 4**	–	–	–	442000	470000	150000	410
0.35	189200	2.0	4095	–	**3/V 19 L4**	–	**BN 132MB 4**	–	–	–	638000	702000	200000	430
0.38	176800	2.6	3780	–	**3/V 21 L4**	–	**BN 132MB 4**	–	–	–	779000	923000	1200000	440
0.39	170800	1.6	3696	–	**3/V 18 L4**	–	**BN 132MB 4**	–	–	–	503000	565000	200000	420
0.41	161500	1.7	3495	–	**3/V 18 L4**	–	**BN 132MB 4**	–	–	–	503000	565000	200000	420
0.44	144700	0.9	3250	–	**3/V 16 L4**	–	**BN 132MB 4**	–	–	–	345000	385000	150000	400
0.45	152900	2.4	3231	–	**3/V 19 L4**	–	**BN 132MB 4**	–	–	–	638000	702000	200000	430
0.45	146400	1.3	3168	–	**3/V 17 L4**	–	**BN 132MB 4**	–	–	–	442000	470000	150000	410
0.49	136100	2.0	2945	–	**3/V 18 L4**	–	**BN 132MB 4**	–	–	–	503000	565000	200000	420
0.52	120400	1.4	2773	–	**3/V 17 L4**	–	**BN 132MB 4**	–	–	–	442000	470000	150000	410
0.53	122000	0.9	2738	–	**3/V 16 L4**	–	**BN 132MB 4**	–	–	–	345000	385000	150000	400

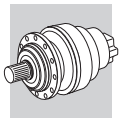

A

P_1 = 9.2 kW

n_2	M_{n2}	f_S	i	Pt					Rn_2 [N]					
min^{-1}	Nm			kW					MC/PC	MZ/PZ	HC	HZ	FZ	
0.56	122200	3.0	2582	–	**3/V 19 L4**	**–**	**BN 132MB 4**	**–**	–	–	638000	702000	200000	430
0.58	116600	2.4	2464	–	**3/V 18 L4**	**–**	**BN 132MB 4**	**–**	–	–	503000	565000	200000	420
0.61	109600	1.3	2343	–	**3/V 16 L4**	**–**	**BN 132MB 4**	**–**	–	–	345000	385000	150000	400
0.63	106000	2.0	2295	–	**3/V 18 L4**	**–**	**BN 132MB 4**	**–**	–	–	503000	565000	200000	420
0.66	101300	1.3	2167	–	**3/V 16 L4**	**–**	**BN 132MB 4**	**–**	–	–	345000	385000	150000	400
0.72	83500	1.1	1994	–	**3/V 15 L3**	**–**	**BN 132MB 4**	**–**	–	–	206000	243000	90000	388
0.79	85400	1.3	1826	–	**3/V 16 L4**	**–**	**BN 132MB 4**	**–**	–	–	345000	385000	150000	400
0.87	72500	1.0	1662	–	**3/V 14 L3**	**–**	**BN 132MB 4**	**–**	–	–	206000	243000	90000	376
0.87	72500	1.4	1662	–	**3/V 15 L3**	**–**	**BN 132MB 4**	**–**	–	–	206000	243000	90000	388
0.91	69300	1.6	1589	–	**3/V 16 L3**	**–**	**BN 132MB 4**	**–**	–	–	345000	385000	150000	400
1.0	61800	0.9	1418	–	**3/V 13 L3**	**–**	**BN 132MB 4**	**–**	–	–	190500	225400	78500	364
1.0	61100	1.4	1400	–	**3/V 15 L3**	**–**	**BN 132MB 4**	**–**	–	–	202600	237900	88000	388
1.1	61900	2.5	1365	–	**3/V 17 L3**	**–**	**BN 132MB 4**	**–**	–	–	429900	457700	145400	410
1.1	59500	1.6	1329	–	**3/V 15 L3**	**–**	**BN 132MB 4**	**–**	–	–	199500	234200	86400	388
1.1	57800	1.1	1324	–	**3/V 14 L3**	**–**	**BN 132MB 4**	**–**	–	–	199300	233900	86300	376
1.1	57800	1.9	1324	–	**3/V 16 L3**	**–**	**BN 132MB 4**	**–**	–	–	331300	368500	143900	400
1.1	56300	0.9	1291	–	**3/V 13 L3**	**–**	**BN 132MB 4**	**–**	–	–	185200	219200	76100	364
1.2	58600	2.6	1215	–	**3/V 17 L3**	**–**	**BN 132MB 4**	**–**	–	–	415100	442000	139800	410
1.3	51400	2.5	1134	–	**3/V 17 L3**	**–**	**BN 132MB 4**	**–**	–	–	406600	432900	136600	410
1.3	50100	1.8	1120	–	**3/V 15 L3**	**–**	**BN 132MB 4**	**–**	–	–	189500	222500	81600	388
1.3	48700	1.1	1116	–	**3/V 14 L3**	**–**	**BN 132MB 4**	**–**	–	–	189300	222200	81500	376
1.3	47400	1.1	1088	–	**3/V 13 L3**	**–**	**BN 132MB 4**	**–**	–	–	175900	208200	71900	364
1.4	48000	2.5	1059	–	**3/V 16 L3**	**–**	**BN 132MB 4**	**–**	–	–	309800	344600	133600	400
1.4	49400	2.6	1024	–	**3/V 17 L3**	**–**	**BN 132MB 4**	**–**	–	–	394300	419900	132100	410
1.4	48100	1.1	1009	–	**3/V 13 L3**	**–**	**BN 132MB 4**	**–**	–	–	172000	203600	70100	364
1.4	47500	1.3	997	–	**3/V 14 L3**	**–**	**BN 132MB 4**	**–**	–	–	183000	214800	78500	376
1.4	47500	2.0	997	–	**3/V 15 L3**	**–**	**BN 132MB 4**	**–**	–	–	183000	214800	78500	388
1.6	39300	1.0	900	–	**3/V 11 L3**	**–**	**BN 132MB 4**	**–**	–	–	134500	167600	54800	352
1.6	40000	1.4	893	–	**3/V 14 L3**	**–**	**BN 132MB 4**	**–**	–	–	177000	207800	75700	376
1.6	40500	2.5	893	–	**3/V 16 L3**	**–**	**BN 132MB 4**	**–**	–	–	294300	327300	126200	400
1.7	38900	1.4	870	–	**3/V 13 L3**	**–**	**BN 132MB 4**	**–**	–	–	164500	194700	66700	364
1.7	41000	2.6	851	–	**3/V 17 L3**	**–**	**BN 132MB 4**	**–**	–	–	373000	397100	124200	410
1.7	40000	2.0	840	–	**3/V 15 L3**	**–**	**BN 132MB 4**	**–**	–	–	173800	204100	74200	388
1.7	39400	1.1	827	–	**3/V 11 L3**	**–**	**BN 132MB 4**	**–**	–	–	131100	163400	53300	352
1.8	37800	1.3	794	–	**3/V 14 L3**	**–**	**BN 132MB 4**	**–**	–	–	170900	200700	72800	376
1.8	38300	2.6	794	–	**3/V 16 L3**	**–**	**BN 132MB 4**	**–**	–	–	284200	316100	121400	400
1.9	33200	1.4	741	–	**3/V 13 L3**	**–**	**BN 132MB 4**	**–**	–	–	156800	185500	63200	364
2.0	32200	1.2	720	–	**3/V 11 L3**	**–**	**BN 132MB 4**	**–**	–	–	125800	156700	50900	352
2.1	31100	1.4	695	–	**3/V 14 L3**	**–**	**BN 132MB 4**	**–**	–	–	164300	192800	69700	376
2.2	32300	2.6	669	–	**3/V 16 L3**	**–**	**BN 132MB 4**	**–**	–	–	270000	300300	114600	400
2.2	32400	2.7	665	–	**3/V 15 L3**	**–**	**BN 132MB 4**	**–**	–	–	162000	190200	68600	388
2.2	30700	1.3	644	–	**3/V 11 L3**	**–**	**BN 132MB 4**	**–**	–	–	121700	151600	49000	352
2.6	27000	1.0	560	–	**3/V 10 L3**	**–**	**BN 132MB 4**	**–**	–	–	98700	124100	46800	340
2.6	27300	3.0	560	–	**3/V 15 L3**	**–**	**BN 132MB 4**	**–**	–	–	153900	180700	64800	388
2.8	24500	1.1	507	–	**3/V 10 L3**	**–**	**BN 132MB 4**	**–**	–	–	95800	120500	45300	340
3.2	21800	3.0	446	–	**3/V 15 L3**	**–**	**BN 132MB 4**	**–**	–	–	143800	168800	60100	388
3.3	21000	1.3	436	–	**3/V 10 L3**	**–**	**BN 132MB 4**	**–**	–	–	91600	115200	43100	340
8.0	9700	1.1	180	–	**–**	**3/A 07 L2**	**BN 132MB 4**	**M 4LB 4**	25500	32000	58300	76500	22200	317
9.3	8340	1.1	155	–	**–**	**3/A 07 L2**	**BN 132MB 4**	**M 4LB 4**	24300	30500	55800	73100	21100	317
10.2	7580	1.0	141	–	**–**	**3/A 06 L2**	**BN 132MB 4**	**M 4LB 4**	21200	24000	50400	58700	15900	305
10.3	7560	1.5	140	–	**–**	**3/A 07 L2**	**BN 132MB 4**	**M 4LB 4**	23500	29500	54100	70900	20400	317
11.1	6980	1.6	130	–	**–**	**3/A 07 L2**	**BN 132MB 4**	**M 4LB 4**	22900	28700	52900	69300	19900	317
12.8	6040	1.0	112	–	**–**	**3/A 06 L2**	**BN 132MB 4**	**M 4LB 4**	19600	22200	47100	54800	14700	305
13.2	5850	1.5	109	–	**–**	**3/A 07 L2**	**BN 132MB 4**	**M 4LB 4**	21600	27100	50100	65700	18800	317
14.7	5460	1.0	98.3	–	**–**	**3/A 06 L2**	**BN 132MB 4**	**M 4LB 4**	18800	21300	45200	52700	14100	305
16.3	4920	1.3	88.5	–	**–**	**3/A 06 L2**	**BN 132MB 4**	**M 4LB 4**	18100	20600	43800	51000	13600	305
16.4	4880	2.1	87.7	–	**–**	**3/A 07 L2**	**BN 132MB 4**	**M 4LB 4**	20100	25200	47000	61600	17500	317
17.7	4520	1.4	81.2	–	**–**	**3/A 06 L2**	**BN 132MB 4**	**M 4LB 4**	17600	20000	42700	49700	13200	305
20.6	3890	1.5	69.9	–	**–**	**3/A 06 L2**	**BN 132MB 4**	**M 4LB 4**	16800	19000	40800	47500	12600	305
21.1	3800	2.1	68.3	–	**–**	**3/A 07 L2**	**BN 132MB 4**	**M 4LB 4**	18500	23200	43600	57200	16100	317
23.0	3480	0.9	62.6	–	**–**	**3/A 05 L2**	**BN 132MB 4**	**M 4LB 4**	13000	15000	24200	29100	8330	293
23.9	3340	1.8	60.1	–	**–**	**3/A 06 L2**	**BN 132MB 4**	**M 4LB 4**	15900	18100	39000	45500	12000	305
25.1	3180	2.1	57.3	–	**–**	**3/A 07 L2**	**BN 132MB 4**	**M 4LB 4**	17400	21900	41400	54200	15200	317
25.2	3170	1.0	57.0	–	**–**	**3/A 05 L2**	**BN 132MB 4**	**M 4LB 4**	12600	14500	23500	28300	8070	293
25.9	3100	1.5	55.7	–	**–**	**3/A 06 L2**	**BN 132MB 4**	**M 4LB 4**	15500	17600	38100	44400	11700	305

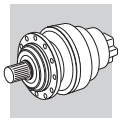

P_1 = 9.2 kW

n_2 min^{-1}	M_{n2} Nm	f_S	i	Pt kW					Rn_2 [N] MC/PC	MZ/PZ	HC	HZ	FZ	
27.0	2960	1.0	53.3	–	–	**3/A 05 L2**	**BN 132MB 4**	**M 4LB 4**	12300	14200	23000	27700	7890	293
27.8	2880	1.8	51.7	–	–	**3/A 06 L2**	**BN 132MB 4**	**M 4LB 4**	15200	17200	37300	43400	11400	305
31	2620	1.5	47.2	–	–	**3/A 06 L2**	**BN 132MB 4**	**M 4LB 4**	14700	16700	36300	42300	11000	305
33	2460	1.2	44.3	–	–	**3/A 04 L2**	**BN 132MB 4**	**M 4LB 4**	11600	13300	21800	26200	7420	281
33	2450	1.4	44.0	–	–	**3/A 05 L2**	**BN 132MB 4**	**M 4LB 4**	11500	13300	21700	26100	7400	293
35	2280	2.1	41.1	–	–	**3/A 06 L2**	**BN 132MB 4**	**M 4LB 4**	14000	15900	34800	40500	10500	305
37	2170	1.0	39.1	–	–	**3/A 04 L2**	**BN 132MB 4**	**M 4LB 4**	11100	12800	21000	25200	7120	281
37	2170	1.4	39.0	–	–	**3/A 05 L2**	**BN 132MB 4**	**M 4LB 4**	11100	12800	21000	25200	7110	293
41	1960	1.2	35.3	–	–	**3/A 04 L2**	**BN 132MB 4**	**M 4LB 4**	10700	12400	20300	24500	6880	281
41	1940	1.8	34.9	–	–	**3/A 06 L2**	**BN 132MB 4**	**M 4LB 4**	13300	15100	33200	38600	9990	305
44	1820	2.2	32.7	–	–	**3/A 06 L2**	**BN 132MB 4**	**M 4LB 4**	13000	14700	32500	37900	9780	305
45	1790	1.8	32.2	–	–	**3/A 05 L2**	**BN 132MB 4**	**M 4LB 4**	10400	12000	19800	23800	6670	293
48	1680	1.4	30.2	–	–	**3/A 04 L2**	**BN 132MB 4**	**M 4LB 4**	10200	11700	19400	23300	6530	281
52	1540	1.8	27.7	–	–	**3/A 04 L2**	**BN 132MB 4**	**M 4LB 4**	9890	11400	18900	22800	6350	281
52	1540	1.8	27.7	–	–	**3/A 05 L2**	**BN 132MB 4**	**M 4LB 4**	9890	11400	18900	22800	6350	293
52	1540	2.2	27.7	–	–	**3/A 06 L2**	**BN 132MB 4**	**M 4LB 4**	12300	14000	30900	36000	9250	305
56	1420	1.4	25.6	–	–	**3/A 04 L2**	**BN 132MB 4**	**M 4LB 4**	9630	11100	18500	22200	6180	281
65	1230	1.8	22.1	–	–	**3/A 04 L2**	**BN 132MB 4**	**M 4LB 4**	9170	10600	17700	21300	5880	281
65	1230	1.8	22.1	–	–	**3/A 05 L2**	**BN 132MB 4**	**M 4LB 4**	9170	10600	17700	21300	5880	293
77	1040	1.8	18.7	–	–	**3/A 04 L2**	**BN 132MB 4**	**M 4LB 4**	8680	10000	16800	20200	5570	281
77	1040	1.8	18.7	–	–	**3/A 05 L2**	**BN 132MB 4**	**M 4LB 4**	8680	10000	16800	20200	5570	293

P_1 = 11 kW

n_2 min^{-1}	M_{n2} Nm	f_S	i	Pt kW					Rn_2 [N] MC/PC	MZ/PZ	HC	HZ	FZ	
0.28	268300	1.5	5164	–	**3/V 19 L4**	–	**BN 160MR 4**	–	–	–	638000	702000	200000	430
0.28	282000	1.0	5099	–	**3/V 18 L4**	–	**BN 160MR 4**	–	–	–	503000	565000	200000	420
0.29	265300	2.1	5040	–	**3/V 21 L4**	–	**BN 160MR 4**	–	–	–	779000	923000	1200000	440
0.32	254600	2.2	4550	–	**3/V 21 L4**	–	**BN 160MR 4**	–	–	–	779000	923000	1200000	440
0.32	252400	1.4	4457	–	**3/V 19 L4**	–	**BN 160MR 4**	–	–	–	638000	702000	200000	430
0.33	242600	1.2	4386	–	**3/V 18 L4**	–	**BN 160MR 4**	–	–	–	503000	565000	200000	420
0.35	226400	1.7	4095	–	**3/V 19 L4**	–	**BN 160MR 4**	–	–	–	638000	702000	200000	430
0.38	211500	2.2	3780	–	**3/V 21 L4**	–	**BN 160MR 4**	–	–	–	779000	923000	1200000	440
0.39	204400	1.4	3696	–	**3/V 18 L4**	–	**BN 160MR 4**	–	–	–	503000	565000	200000	420
0.40	206300	2.6	3600	–	**3/V 21 L4**	–	**BN 160MR 4**	–	–	–	779000	923000	1200000	440
0.41	193300	1.5	3495	–	**3/V 18 L4**	–	**BN 160MR 4**	–	–	–	503000	565000	200000	420
0.45	183000	2.0	3231	–	**3/V 19 L4**	–	**BN 160MR 4**	–	–	–	638000	702000	200000	430
0.45	175200	1.1	3168	–	**3/V 17 L4**	–	**BN 160MR 4**	–	–	–	442000	470000	150000	410
0.49	162900	1.7	2945	–	**3/V 18 L4**	–	**BN 160MR 4**	–	–	–	503000	565000	200000	420
0.52	144100	1.2	2773	–	**3/V 17 L4**	–	**BN 160MR 4**	–	–	–	442000	470000	150000	410
0.56	146200	2.5	2582	–	**3/V 19 L4**	–	**BN 160MR 4**	–	–	–	638000	702000	200000	430
0.58	145700	1.1	2485	–	**3/V 17 L4**	–	**BN 160MR 4**	–	–	–	442000	470000	150000	410
0.58	139500	2.0	2464	–	**3/V 18 L4**	–	**BN 160MR 4**	–	–	–	503000	565000	200000	420
0.61	131100	1.1	2343	–	**3/V 16 L4**	–	**BN 160MR 4**	–	–	–	345000	385000	150000	400
0.63	126900	1.7	2295	–	**3/V 18 L4**	–	**BN 160MR 4**	–	–	–	503000	565000	200000	420
0.66	121300	1.1	2167	–	**3/V 16 L4**	–	**BN 160MR 4**	–	–	–	345000	385000	150000	400
0.70	121100	1.5	2065	–	**3/V 17 L4**	–	**BN 160MR 4**	–	–	–	442000	470000	150000	410
0.72	100000	0.9	1994	–	**3/V 15 L3**	–	**BN 160MR 4**	–	–	–	206000	243000	90000	388
0.78	108300	2.6	1848	–	**3/V 18 L4**	–	**BN 160MR 4**	–	–	–	503000	565000	200000	420
0.79	102200	1.1	1826	–	**3/V 16 L4**	–	**BN 160MR 4**	–	–	–	345000	385000	150000	400
0.81	100800	1.8	1780	–	**3/V 17 L4**	–	**BN 160MR 4**	–	–	–	442000	470000	150000	410
0.82	102500	2.7	1748	–	**3/V 18 L4**	–	**BN 160MR 4**	–	–	–	503000	565000	200000	420
0.87	86700	1.1	1662	–	**3/V 15 L3**	–	**BN 160MR 4**	–	–	–	206000	243000	90000	388
0.91	82900	1.4	1589	–	**3/V 16 L3**	–	**BN 160MR 4**	–	–	–	345000	385000	150000	400
0.98	86300	3.0	1473	–	**3/V 18 L4**	–	**BN 160MR 4**	–	–	–	503000	563100	198800	420
1.0	73100	1.2	1400	–	**3/V 15 L3**	–	**BN 160MR 4**	–	–	–	202600	237900	88000	388
1.1	74100	2.1	1365	–	**3/V 17 L3**	–	**BN 160MR 4**	–	–	–	429900	457700	145400	410
1.1	71200	1.4	1329	–	**3/V 15 L3**	–	**BN 160MR 4**	–	–	–	199500	234200	86400	388
1.1	69100	1.6	1324	–	**3/V 16 L3**	–	**BN 160MR 4**	–	–	–	331300	368500	143900	400
1.2	70100	2.2	1215	–	**3/V 17 L3**	–	**BN 160MR 4**	–	–	–	415100	442000	139800	410
1.3	61500	2.1	1134	–	**3/V 17 L3**	–	**BN 160MR 4**	–	–	–	406600	432900	136600	410

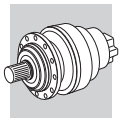

A

P_1 = 11 kW

n_2	M_{n2}	f_S	i	Pt					Rn_2 [N]					
min^{-1}	Nm			kW					MC/PC	MZ/PZ	HC	HZ	FZ	
1.3	60000	1.5	1120	–	**3/V 15 L3**	**–**	**BN 160MR 4**	**–**	–	–	189500	222500	81600	388
1.4	57500	2.1	1059	–	**3/V 16 L3**	**–**	**BN 160MR 4**	**–**	–	–	309800	344600	133600	400
1.4	59100	2.2	1024	–	**3/V 17 L3**	**–**	**BN 160MR 4**	**–**	–	–	394300	419900	132100	410
1.4	57500	0.9	1009	–	**3/V 13 L3**	**–**	**BN 160MR 4**	**–**	–	–	172000	203600	70100	364
1.4	56800	1.1	997	–	**3/V 14 L3**	**–**	**BN 160MR 4**	**–**	–	–	183000	214800	78500	376
1.4	56800	1.6	997	–	**3/V 15 L3**	**–**	**BN 160MR 4**	**–**	–	–	183000	214800	78500	388
1.6	47800	1.2	893	–	**3/V 14 L3**	**–**	**BN 160MR 4**	**–**	–	–	177000	207800	75700	376
1.6	48400	2.1	893	–	**3/V 16 L3**	**–**	**BN 160MR 4**	**–**	–	–	294300	327300	126200	400
1.7	46600	1.2	870	–	**3/V 13 L3**	**–**	**BN 160MR 4**	**–**	–	–	164500	194700	66700	364
1.7	49100	2.2	851	–	**3/V 17 L3**	**–**	**BN 160MR 4**	**–**	–	–	373000	397100	124200	410
1.7	47900	1.7	840	–	**3/V 15 L3**	**–**	**BN 160MR 4**	**–**	–	–	173800	204100	74200	388
1.8	47300	0.9	810	–	**3/V 13 L3**	**–**	**BN 160MR 4**	**–**	–	–	161100	190600	65100	364
1.8	47800	3.0	810	–	**3/V 17 L3**	**–**	**BN 160MR 4**	**–**	–	–	367600	391400	122100	410
1.8	45300	1.1	794	–	**3/V 14 L3**	**–**	**BN 160MR 4**	**–**	–	–	170900	200700	72800	376
1.8	45800	2.2	794	–	**3/V 16 L3**	**–**	**BN 160MR 4**	**–**	–	–	284200	316100	121400	400
1.9	39700	1.2	741	–	**3/V 13 L3**	**–**	**BN 160MR 4**	**–**	–	–	156800	185500	63200	364
2.0	38600	1.0	720	–	**3/V 11 L3**	**–**	**BN 160MR 4**	**–**	–	–	125800	156700	50900	352
2.1	37300	1.2	695	–	**3/V 14 L3**	**–**	**BN 160MR 4**	**–**	–	–	164300	192800	69700	376
2.1	39300	1.3	673	–	**3/V 13 L3**	**–**	**BN 160MR 4**	**–**	–	–	152300	180300	61200	364
2.2	38600	2.2	669	–	**3/V 16 L3**	**–**	**BN 160MR 4**	**–**	–	–	270000	300300	114600	400
2.2	38800	1.8	665	–	**3/V 14 L3**	**–**	**BN 160MR 4**	**–**	–	–	162000	190200	68600	376
2.2	38800	2.3	665	–	**3/V 15 L3**	**–**	**BN 160MR 4**	**–**	–	–	162000	190200	68600	388
2.2	36700	1.1	644	–	**3/V 11 L3**	**–**	**BN 160MR 4**	**–**	–	–	121700	151600	49000	352
2.5	35000	1.6	579	–	**3/V 14 L3**	**–**	**BN 160MR 4**	**–**	–	–	155500	182600	65500	376
2.5	33100	1.5	567	–	**3/V 13 L3**	**–**	**BN 160MR 4**	**–**	–	–	144700	171300	57800	364
2.6	32700	2.5	560	–	**3/V 15 L3**	**–**	**BN 160MR 4**	**–**	–	–	153900	180700	64800	388
2.6	32200	1.2	551	–	**3/V 11 L3**	**–**	**BN 160MR 4**	**–**	–	–	116100	144600	46600	352
2.8	30100	1.7	516	–	**3/V 13 L3**	**–**	**BN 160MR 4**	**–**	–	–	140700	166500	56100	364
2.8	29800	1.2	510	–	**3/V 11 L3**	**–**	**BN 160MR 4**	**–**	–	–	113400	141300	45400	352
2.9	30100	1.9	498	–	**3/V 14 L3**	**–**	**BN 160MR 4**	**–**	–	–	148600	174500	62300	376
2.9	30100	2.8	498	–	**3/V 15 L3**	**–**	**BN 160MR 4**	**–**	–	–	148600	174500	62300	388
3.2	26100	1.8	446	–	**3/V 14 L3**	**–**	**BN 160MR 4**	**–**	–	–	143800	168800	60100	376
3.2	26100	2.5	446	–	**3/V 15 L3**	**–**	**BN 160MR 4**	**–**	–	–	143800	168800	60100	388
3.3	25200	1.1	436	–	**3/V 10 L3**	**–**	**BN 160MR 4**	**–**	–	–	91600	115200	43100	340
3.4	25100	1.6	430	–	**3/V 11 L3**	**–**	**BN 160MR 4**	**–**	–	–	107800	134200	42800	352
3.4	25700	1.8	425	–	**3/V 13 L3**	**–**	**BN 160MR 4**	**–**	–	–	132700	157100	52600	364
3.6	24000	1.9	397	–	**3/V 14 L3**	**–**	**BN 160MR 4**	**–**	–	–	138800	163000	57800	376
3.7	23600	2.9	386	–	**3/V 15 L3**	**–**	**BN 160MR 4**	**–**	–	–	137700	161700	57300	388
3.9	21600	1.8	370	–	**3/V 13 L3**	**–**	**BN 160MR 4**	**–**	–	–	127300	150700	50200	364
8.0	11600	0.9	180	–	**–**	**3/A 07 L2**	**BN 160MR 4**	**M 4LC 4**	25500	32000	58300	76500	22200	317
9.3	9990	0.9	155	–	**–**	**3/A 07 L2**	**BN 160MR 4**	**M 4LC 4**	24300	30500	55800	73100	21100	317
10.3	9040	1.2	140	–	**–**	**3/A 07 L2**	**BN 160MR 4**	**M 4LC 4**	23500	29500	54100	70900	20400	317
11.1	8360	1.3	130	–	**–**	**3/A 07 L2**	**BN 160MR 4**	**M 4LC 4**	22900	28700	52900	69300	19900	317
13.2	7000	1.3	109	–	**–**	**3/A 07 L2**	**BN 160MR 4**	**M 4LC 4**	21600	27100	50100	65700	18800	317
16.3	5890	1.1	88.5	–	**–**	**3/A 06 L2**	**BN 160MR 4**	**M 4LC 4**	18100	20600	43800	51000	13600	305
16.4	5840	1.7	87.7	–	**–**	**3/A 07 L2**	**BN 160MR 4**	**M 4LC 4**	20100	25200	47000	61600	17500	317
17.7	5410	1.2	81.2	–	**–**	**3/A 06 L2**	**BN 160MR 4**	**M 4LC 4**	17600	20000	42700	49700	13200	305
20.6	4650	1.2	69.9	–	**–**	**3/A 06 L2**	**BN 160MR 4**	**M 4LC 4**	16800	19000	40800	47500	12600	305
21.1	4550	1.7	68.3	–	**–**	**3/A 07 L2**	**BN 160MR 4**	**M 4LC 4**	18500	23200	43600	57200	16100	317
23.9	4000	1.5	60.1	–	**–**	**3/A 06 L2**	**BN 160MR 4**	**M 4LC 4**	15900	18100	39000	45500	12000	305
25.1	3810	1.7	57.3	–	**–**	**3/A 07 L2**	**BN 160MR 4**	**M 4LC 4**	17400	21900	41400	54200	15200	317
25.9	3710	1.2	55.7	–	**–**	**3/A 06 L2**	**BN 160MR 4**	**M 4LC 4**	15500	17600	38100	44400	11700	305
27.8	3440	1.5	51.7	–	**–**	**3/A 06 L2**	**BN 160MR 4**	**M 4LC 4**	15200	17200	37300	43400	11400	305
29.3	3280	2.6	49.2	–	**–**	**3/A 07 L2**	**BN 160MR 4**	**M 4LC 4**	16600	20800	39500	51800	14400	317
31	3140	1.2	47.2	–	**–**	**3/A 06 L2**	**BN 160MR 4**	**M 4LC 4**	14700	16700	36300	42300	11000	305
33	2950	1.0	44.3	–	**–**	**3/A 04 L2**	**–**	**M 4LC 4**	11600	13300	21800	26200	7420	281
33	2930	1.1	44.0	–	**–**	**3/A 05 L2**	**–**	**M 4LC 4**	11500	13300	21700	26100	7400	293
35	2730	1.8	41.1	–	**–**	**3/A 06 L2**	**BN 160MR 4**	**M 4LC 4**	14000	15900	34800	40500	10500	305
37	2600	1.2	39.0	–	**–**	**3/A 05 L2**	**–**	**M 4LC 4**	11100	12800	21000	25200	7110	293
41	2350	1.0	35.3	–	**–**	**3/A 04 L2**	**–**	**M 4LC 4**	10700	12400	20300	24500	6880	281
41	2320	1.5	34.9	–	**–**	**3/A 06 L2**	**BN 160MR 4**	**M 4LC 4**	13300	15100	33200	38600	9990	305
44	2180	1.8	32.7	–	**–**	**3/A 06 L2**	**BN 160MR 4**	**M 4LC 4**	13000	14700	32500	37900	9780	305
45	2150	1.5	32.2	–	**–**	**3/A 05 L2**	**–**	**M 4LC 4**	10400	12000	19800	23800	6670	293
48	2010	1.1	30.2	–	**–**	**3/A 04 L2**	**–**	**M 4LC 4**	10200	11700	19400	23300	6530	281
52	1850	1.5	27.7	–	**–**	**3/A 04 L2**	**–**	**M 4LC 4**	9890	11400	18900	22800	6350	281

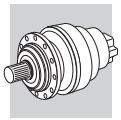

P_1 = 11 kW

n_2 min^{-1}	M_{n2} Nm	f_S	i	Pt kW					Rn$_2$ [N] MC/PC	MZ/PZ	HC	HZ	FZ	
52	1850	1.5	27.7	–	–	**3/A 05 L2**	–	**M 4LC 4**	9890	11400	18900	22800	6350	293
52	1850	1.8	27.7	–	–	**3/A 06 L2**	**BN 160MR 4**	**M 4LC 4**	12300	14000	30900	36000	9250	305
56	1700	1.1	25.6	–	–	**3/A 04 L2**	–	**M 4LC 4**	9630	11100	18500	22200	6180	281
65	1470	1.5	22.1	–	–	**3/A 04 L2**	–	**M 4LC 4**	9170	10600	17700	21300	5880	281
65	1470	1.5	22.1	–	–	**3/A 05 L2**	–	**M 4LC 4**	9170	10600	17700	21300	5880	293
77	1250	1.5	18.7	–	–	**3/A 04 L2**	–	**M 4LC 4**	8680	10000	16800	20200	5570	281
77	1250	1.5	18.7	–	–	**3/A 05 L2**	–	**M 4LC 4**	8680	10000	16800	20200	5570	293

P_1 = 15 kW

n_2 min^{-1}	M_{n2} Nm	f_S	i	Pt kW					Rn$_2$ [N] MC/PC	MZ/PZ	HC	HZ	FZ	
0.28	360200	1.1	5164	–	**3/V 19 L4**	–	**BN 160L 4**	–	–	–	638000	702000	200000	430
0.29	356100	1.6	5040	–	**3/V 21 L4**	–	**BN 160L 4**	–	–	–	779000	923000	1200000	440
0.32	341800	1.6	4550	–	**3/V 21 L4**	–	**BN 160L 4**	–	–	–	779000	923000	1200000	440
0.33	338900	1.1	4457	–	**3/V 19 L4**	–	**BN 160L 4**	–	–	–	638000	702000	200000	430
0.36	304000	1.3	4095	–	**3/V 19 L4**	–	**BN 160L 4**	–	–	–	638000	702000	200000	430
0.39	284000	1.6	3780	–	**3/V 21 L4**	–	**BN 160L 4**	–	–	–	779000	923000	1200000	440
0.40	274400	1.0	3696	–	**3/V 18 L4**	–	**BN 160L 4**	–	–	–	503000	565000	200000	420
0.41	276900	1.9	3600	–	**3/V 21 L4**	–	**BN 160L 4**	–	–	–	779000	923000	1200000	440
0.42	259500	1.1	3495	–	**3/V 18 L4**	–	**BN 160L 4**	–	–	–	503000	565000	200000	420
0.45	245600	1.5	3231	–	**3/V 19 L4**	–	**BN 160L 4**	–	–	–	638000	702000	200000	430
0.50	218600	1.2	2945	–	**3/V 18 L4**	–	**BN 160L 4**	–	–	–	503000	565000	200000	420
0.54	212500	2.5	2700	–	**3/V 21 L4**	–	**BN 160L 4**	–	–	–	779000	923000	1200000	440
0.57	196300	1.9	2582	–	**3/V 19 L4**	–	**BN 160L 4**	–	–	–	638000	702000	200000	430
0.58	193800	2.6	2520	–	**3/V 21 L4**	–	**BN 160L 4**	–	–	–	779000	923000	1200000	440
0.59	187300	1.5	2464	–	**3/V 18 L4**	–	**BN 160L 4**	–	–	–	503000	565000	200000	420
0.64	170400	1.2	2295	–	**3/V 18 L4**	–	**BN 160L 4**	–	–	–	503000	565000	200000	420
0.71	162500	1.1	2065	–	**3/V 17 L4**	–	**BN 160L 4**	–	–	–	442000	470000	150000	410
0.79	145500	1.9	1848	–	**3/V 18 L4**	–	**BN 160L 4**	–	–	–	503000	565000	200000	420
0.82	135300	1.4	1780	–	**3/V 17 L4**	–	**BN 160L 4**	–	–	–	442000	470000	150000	410
0.84	137600	2.0	1748	–	**3/V 18 L4**	–	**BN 160L 4**	–	–	–	503000	565000	200000	420
0.92	111300	1.0	1589	–	**3/V 16 L3**	–	**BN 160L 4**	–	–	–	345000	385000	150000	400
0.99	115900	2.2	1473	–	**3/V 18 L4**	–	**BN 160L 4**	–	–	–	503000	563100	198800	420
1.1	99400	1.5	1365	–	**3/V 17 L3**	–	**BN 160L 4**	–	–	–	429900	457700	145400	410
1.1	95600	1.0	1329	–	**3/V 15 L3**	–	**BN 160L 4**	–	–	–	199500	234200	86400	388
1.1	92800	1.2	1324	–	**3/V 16 L3**	–	**BN 160L 4**	–	–	–	331300	368500	143900	400
1.2	98100	2.8	1232	–	**3/V 18 L4**	–	**BN 160L 4**	–	–	–	503000	533700	187300	420
1.2	94100	1.6	1215	–	**3/V 17 L3**	–	**BN 160L 4**	–	–	–	415100	442000	139800	410
1.3	92800	3.0	1165	–	**3/V 18 L4**	–	**BN 160L 4**	–	–	–	503000	524900	183800	420
1.3	82600	1.5	1134	–	**3/V 17 L3**	–	**BN 160L 4**	–	–	–	406600	432900	136600	410
1.3	80600	1.1	1120	–	**3/V 15 L3**	–	**BN 160L 4**	–	–	–	189500	222500	81600	388
1.4	77200	1.6	1059	–	**3/V 16 L3**	–	**BN 160L 4**	–	–	–	309800	344600	133600	400
1.4	79300	1.6	1024	–	**3/V 17 L3**	–	**BN 160L 4**	–	–	–	394300	419900	132100	410
1.5	76300	1.2	997	–	**3/V 15 L3**	–	**BN 160L 4**	–	–	–	183000	214800	78500	388
1.6	65000	1.6	893	–	**3/V 16 L3**	–	**BN 160L 4**	–	–	–	294300	327300	126200	400
1.7	65900	1.6	851	–	**3/V 17 L3**	–	**BN 160L 4**	–	–	–	373000	397100	124200	410
1.7	64300	1.3	840	–	**3/V 15 L3**	–	**BN 160L 4**	–	–	–	173800	204100	74200	388
1.8	64200	2.2	810	–	**3/V 17 L3**	–	**BN 160L 4**	–	–	–	367600	391400	122100	410
1.8	61500	1.6	794	–	**3/V 16 L3**	–	**BN 160L 4**	–	–	–	284200	316100	121400	400
2.1	54100	2.6	683	–	**3/V 17 L3**	–	**BN 160L 4**	–	–	–	349200	371800	115400	410
2.2	52700	1.0	673	–	**3/V 13 L3**	–	**BN 160L 4**	–	–	–	152300	180300	61200	364
2.2	51800	1.6	669	–	**3/V 16 L3**	–	**BN 160L 4**	–	–	–	270000	300300	114600	400
2.2	52100	1.3	665	–	**3/V 14 L3**	–	**BN 160L 4**	–	–	–	162000	190200	68600	376
2.2	52100	1.7	665	–	**3/V 15 L3**	–	**BN 160L 4**	–	–	–	162000	190200	68600	388
2.4	49300	2.7	608	–	**3/V 17 L3**	–	**BN 160L 4**	–	–	–	337200	359000	111000	410
2.5	47000	1.2	579	–	**3/V 14 L3**	–	**BN 160L 4**	–	–	–	155500	182600	65500	376
2.6	44400	1.1	567	–	**3/V 13 L3**	–	**BN 160L 4**	–	–	–	144700	171300	57800	364
2.6	45000	2.6	567	–	**3/V 17 L3**	–	**BN 160L 4**	–	–	–	330300	351700	108500	410
2.6	43900	1.9	560	–	**3/V 15 L3**	–	**BN 160L 4**	–	–	–	153900	180700	64800	388
2.6	43200	0.9	551	–	**3/V 11 L3**	–	**BN 160L 4**	–	–	–	116100	144600	46600	352
2.8	42000	2.6	530	–	**3/V 16 L3**	–	**BN 160L 4**	–	–	–	251700	279900	106000	400

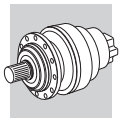

A

P_1 = 15 kW

n_2	M_{n2}	f_S	i	Pt					Rn_2 [N]					
min^{-1}	Nm			kW					MC/PC	MZ/PZ	HC	HZ	FZ	
2.8	40500	1.3	516	–	**3/V 13 L3**	**–**	**BN 160L 4**	**–**	–	–	140700	166500	56100	364
2.9	40400	1.4	498	–	**3/V 14 L3**	**–**	**BN 160L 4**	**–**	–	–	148600	174500	62300	376
2.9	40400	2.1	498	–	**3/V 15 L3**	**–**	**BN 160L 4**	**–**	–	–	148600	174500	62300	388
3.3	35000	1.4	446	–	**3/V 14 L3**	**–**	**BN 160L 4**	**–**	–	–	143800	168800	60100	376
3.3	35000	1.9	446	–	**3/V 15 L3**	**–**	**BN 160L 4**	**–**	–	–	143800	168800	60100	388
3.3	35400	2.6	446	–	**3/V 16 L3**	**–**	**BN 160L 4**	**–**	–	–	239100	265900	100100	400
3.4	33700	1.2	430	–	**3/V 11 L3**	**–**	**BN 160L 4**	**–**	–	–	107800	134200	42800	352
3.4	34500	1.4	425	–	**3/V 13 L3**	**–**	**BN 160L 4**	**–**	–	–	132700	157100	52600	364
3.7	32200	1.4	397	–	**3/V 14 L3**	**–**	**BN 160L 4**	**–**	–	–	138800	163000	57800	376
3.8	31700	2.1	386	–	**3/V 15 L3**	**–**	**BN 160L 4**	**–**	–	–	137700	161700	57300	388
3.9	29000	1.4	370	–	**3/V 13 L3**	**–**	**BN 160L 4**	**–**	–	–	127300	150700	50200	364
10.4	12100	0.9	140	–	**–**	**3/A 07 L2**	**BN 160L 4**	**M 5SB 4**	23500	29500	54100	70900	20400	317
11.3	11200	1.0	130	–	**–**	**3/A 07 L2**	**BN 160L 4**	**M 5SB 4**	22900	28700	52900	69300	19900	317
13.4	9400	0.9	109	–	**–**	**3/A 07 L2**	**BN 160L 4**	**M 5SB 4**	21600	27100	50100	65700	18800	317
16.7	7830	1.3	87.7	–	**–**	**3/A 07 L2**	**BN 160L 4**	**M 5SB 4**	20100	25200	47000	61600	17500	317
20.9	6240	0.9	69.9	–	**–**	**3/A 06 L2**	**BN 160L 4**	**M 5SB 4**	16800	19000	40800	47500	12600	305
21.4	6100	1.3	68.3	–	**–**	**3/A 07 L2**	**BN 160L 4**	**M 5SB 4**	18500	23200	43600	57200	16100	317
24.3	5370	1.1	60.1	–	**–**	**3/A 06 L2**	**BN 160L 4**	**M 5SB 4**	15900	18100	39000	45500	12000	305
25.5	5120	1.3	57.3	–	**–**	**3/A 07 L2**	**BN 160L 4**	**M 5SB 4**	17400	21900	41400	54200	15200	317
26.2	4970	0.9	55.7	–	**–**	**3/A 06 L2**	**BN 160L 4**	**M 5SB 4**	15500	17600	38100	44400	11700	305
28.2	4620	1.1	51.7	–	**–**	**3/A 06 L2**	**BN 160L 4**	**M 5SB 4**	15200	17200	37300	43400	11400	305
29.7	4400	1.9	49.2	–	**–**	**3/A 07 L2**	**BN 160L 4**	**M 5SB 4**	16600	20800	39500	51800	14400	317
31	4210	0.9	47.2	–	**–**	**3/A 06 L2**	**BN 160L 4**	**M 5SB 4**	14700	16700	36300	42300	11000	305
35	3710	2.6	41.5	–	**–**	**3/A 07 L2**	**BN 160L 4**	**M 5SB 4**	15700	19600	37600	49200	13600	317
36	3670	1.3	41.1	–	**–**	**3/A 06 L2**	**BN 160L 4**	**M 5SB 4**	14000	15900	34800	40500	10500	305
42	3120	1.1	34.9	–	**–**	**3/A 06 L2**	**BN 160L 4**	**M 5SB 4**	13300	15100	33200	38600	9990	305
45	2920	1.3	32.7	–	**–**	**3/A 06 L2**	**BN 160L 4**	**M 5SB 4**	13000	14700	32500	37900	9780	305
45	2890	2.7	32.3	–	**–**	**3/A 07 L2**	**BN 160L 4**	**M 5SB 4**	14400	18100	34900	45700	12500	317
53	2480	1.3	27.7	–	**–**	**3/A 06 L2**	**BN 160L 4**	**M 5SB 4**	12300	14000	30900	36000	9250	305
54	2420	2.7	27.1	–	**–**	**3/A 07 L2**	**BN 160L 4**	**M 5SB 4**	13600	17000	33100	43300	11800	317

P_1 = 18.5 kW

n_2	M_{n2}	f_S	i	Pt					Rn_2 [N]					
min^{-1}	Nm			kW					MC/PC	MZ/PZ	HC	HZ	FZ	
0.28	444800	0.9	5164	–	**3/V 19 L4**	**–**	**BN 180M 4**	**–**	–	–	638000	702000	200000	430
0.29	439700	1.3	5040	–	**3/V 21 L4**	**–**	**BN 180M 4**	**–**	–	–	779000	923000	1200000	440
0.32	422100	1.3	4550	–	**3/V 21 L4**	**–**	**BN 180M 4**	**–**	–	–	779000	923000	1200000	440
0.36	375300	1.0	4095	–	**3/V 19 L4**	**–**	**BN 180M 4**	**–**	–	–	638000	702000	200000	430
0.39	350600	1.3	3780	–	**3/V 21 L4**	**–**	**BN 180M 4**	**–**	–	–	779000	923000	1200000	440
0.41	341900	1.6	3600	–	**3/V 21 L4**	**–**	**BN 180M 4**	**–**	–	–	779000	923000	1200000	440
0.45	303300	1.2	3231	–	**3/V 19 L4**	**–**	**BN 180M 4**	**–**	–	–	638000	702000	200000	430
0.50	270000	1.0	2945	–	**3/V 18 L4**	**–**	**BN 180M 4**	**–**	–	–	503000	565000	200000	420
0.54	262400	2.0	2700	–	**3/V 21 L4**	**–**	**BN 180M 4**	**–**	–	–	779000	923000	1200000	440
0.57	242400	1.5	2582	–	**3/V 19 L4**	**–**	**BN 180M 4**	**–**	–	–	638000	702000	200000	430
0.58	239300	2.1	2520	–	**3/V 21 L4**	**–**	**BN 180M 4**	**–**	–	–	779000	923000	1200000	440
0.59	231300	1.2	2464	–	**3/V 18 L4**	**–**	**BN 180M 4**	**–**	–	–	503000	565000	200000	420
0.64	210400	1.0	2295	–	**3/V 18 L4**	**–**	**BN 180M 4**	**–**	–	–	503000	565000	200000	420
0.64	221100	2.5	2275	–	**3/V 21 L4**	**–**	**BN 180M 4**	**–**	–	–	779000	923000	1200000	440
0.71	200600	0.9	2065	–	**3/V 17 L4**	**–**	**BN 180M 4**	**–**	–	–	442000	470000	150000	410
0.77	183700	2.5	1890	–	**3/V 21 L4**	**–**	**BN 180M 4**	**–**	–	–	779000	923000	1200000	440
0.79	179600	1.6	1848	–	**3/V 18 L4**	**–**	**BN 180M 4**	**–**	–	–	503000	565000	200000	420
0.81	178900	3.0	1800	–	**3/V 21 L4**	**–**	**BN 180M 4**	**–**	–	–	779000	923000	1200000	440
0.82	167000	1.1	1780	–	**3/V 17 L4**	**–**	**BN 180M 4**	**–**	–	–	442000	470000	150000	410
0.84	169800	1.7	1748	–	**3/V 18 L4**	**–**	**BN 180M 4**	**–**	–	–	503000	565000	200000	420
0.99	143100	1.8	1473	–	**3/V 18 L4**	**–**	**BN 180M 4**	**–**	–	–	503000	563100	198800	420
1.1	122800	1.3	1365	–	**3/V 17 L3**	**–**	**BN 180M 4**	**–**	–	–	429900	457700	145400	410
1.1	114600	1.0	1324	–	**3/V 16 L3**	**–**	**BN 180M 4**	**–**	–	–	331300	368500	143900	400
1.2	121100	2.3	1232	–	**3/V 18 L4**	**–**	**BN 180M 4**	**–**	–	–	503000	533700	187300	420
1.2	116200	1.3	1215	–	**3/V 17 L3**	**–**	**BN 180M 4**	**–**	–	–	415100	442000	139800	410
1.3	114500	2.4	1165	–	**3/V 18 L4**	**–**	**BN 180M 4**	**–**	–	–	503000	524900	183800	420
1.3	102000	1.3	1134	–	**3/V 17 L3**	**–**	**BN 180M 4**	**–**	–	–	406600	432900	136600	410

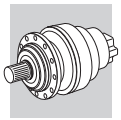

P_1 = 18.5 kW

n_2 min^{-1}	M_{n2} Nm	f_S	i	Pt kW					Rn_2 [N] MC/PC	MZ/PZ	HC	HZ	FZ	
1.3	99500	0.9	1120	–	**3/V 15 L3**	**–**	**BN 180M 4**	**–**	–	–	189500	222500	81600	388
1.4	95300	1.3	1059	–	**3/V 16 L3**	**–**	**BN 180M 4**	**–**	–	–	309800	344600	133600	400
1.4	97900	1.3	1024	–	**3/V 17 L3**	**–**	**BN 180M 4**	**–**	–	–	394300	419900	132100	410
1.5	94200	1.0	997	–	**3/V 15 L3**	**–**	**BN 180M 4**	**–**	–	–	183000	214800	78500	388
1.5	96500	2.5	982	–	**3/V 18 L4**	**–**	**BN 180M 4**	**–**	–	–	488500	498600	173600	420
1.6	80300	1.3	893	–	**3/V 16 L3**	**–**	**BN 180M 4**	**–**	–	–	294300	327300	126200	400
1.7	81300	1.3	851	–	**3/V 17 L3**	**–**	**BN 180M 4**	**–**	–	–	373000	397100	124200	410
1.7	79400	1.0	840	–	**3/V 15 L3**	**–**	**BN 180M 4**	**–**	–	–	173800	204100	74200	388
1.8	79300	1.8	810	–	**3/V 17 L3**	**–**	**BN 180M 4**	**–**	–	–	367600	391400	122100	410
1.8	76000	1.3	794	–	**3/V 16 L3**	**–**	**BN 180M 4**	**–**	–	–	284200	316100	121400	400
1.9	75200	2.5	765	–	**3/V 18 L4**	**–**	**BN 180M 4**	**–**	–	–	453300	462600	159800	420
2.1	66800	2.1	683	–	**3/V 17 L3**	**–**	**BN 180M 4**	**–**	–	–	349200	371800	115400	410
2.2	64000	1.3	669	–	**3/V 16 L3**	**–**	**BN 180M 4**	**–**	–	–	270000	300300	114600	400
2.2	64300	1.1	665	–	**3/V 14 L3**	**–**	**BN 180M 4**	**–**	–	–	162000	190200	68600	376
2.2	64300	1.4	665	–	**3/V 15 L3**	**–**	**BN 180M 4**	**–**	–	–	162000	190200	68600	388
2.4	60900	2.2	608	–	**3/V 17 L3**	**–**	**BN 180M 4**	**–**	–	–	337200	359000	111000	410
2.5	58100	1.0	579	–	**3/V 14 L3**	**–**	**BN 180M 4**	**–**	–	–	155500	182600	65500	376
2.6	55500	2.1	567	–	**3/V 17 L3**	**–**	**BN 180M 4**	**–**	–	–	330300	351700	108500	410
2.6	54200	1.5	560	–	**3/V 15 L3**	**–**	**BN 180M 4**	**–**	–	–	153900	180700	64800	388
2.8	51900	2.1	530	–	**3/V 16 L3**	**–**	**BN 180M 4**	**–**	–	–	251700	279900	106000	400
2.8	50000	1.0	516	–	**3/V 13 L3**	**–**	**BN 180M 4**	**–**	–	–	140700	166500	56100	364
2.9	51300	2.5	512	–	**3/V 17 L3**	**–**	**BN 180M 4**	**–**	–	–	320300	341000	104800	410
2.9	49900	1.2	498	–	**3/V 14 L3**	**–**	**BN 180M 4**	**–**	–	–	148600	174500	62300	376
2.9	49900	1.7	498	–	**3/V 15 L3**	**–**	**BN 180M 4**	**–**	–	–	148600	174500	62300	388
3.3	43200	1.1	446	–	**3/V 14 L3**	**–**	**BN 180M 4**	**–**	–	–	143800	168800	60100	376
3.3	43200	1.5	446	–	**3/V 15 L3**	**–**	**BN 180M 4**	**–**	–	–	143800	168800	60100	388
3.3	43700	2.1	446	–	**3/V 16 L3**	**–**	**BN 180M 4**	**–**	–	–	239100	265900	100100	400
3.4	41600	1.0	430	–	**3/V 11 L3**	**–**	**BN 180M 4**	**–**	–	–	107800	134200	42800	352
3.4	42600	1.1	425	–	**3/V 13 L3**	**–**	**BN 180M 4**	**–**	–	–	132700	157100	52600	364
3.4	42600	2.5	425	–	**3/V 17 L3**	**–**	**BN 180M 4**	**–**	–	–	303000	322600	98500	410
3.7	39800	1.2	397	–	**3/V 14 L3**	**–**	**BN 180M 4**	**–**	–	–	138800	163000	57800	376
3.7	39800	2.5	397	–	**3/V 16 L3**	**–**	**BN 180M 4**	**–**	–	–	230900	256800	96300	400
3.8	39100	1.7	386	–	**3/V 15 L3**	**–**	**BN 180M 4**	**–**	–	–	137700	161700	57300	388
3.9	35800	1.1	370	–	**3/V 13 L3**	**–**	**BN 180M 4**	**–**	–	–	127300	150700	50200	364
16.7	9670	1.1	87.7	–	**–**	**3/A 07 L2**	**BN 180M 4**	**M 5LA 4**	20100	25200	47000	61600	17500	317
21.4	7540	1.1	68.3	–	**–**	**3/A 07 L2**	**BN 180M 4**	**M 5LA 4**	18500	23200	43600	57200	16100	317
24.3	6640	0.9	60.1	–	**–**	**3/A 06 L2**	**BN 180M 4**	**M 5LA 4**	15900	18100	39000	45500	12000	305
25.5	6320	1.1	57.3	–	**–**	**3/A 07 L2**	**BN 180M 4**	**M 5LA 4**	17400	21900	41400	54200	15200	317
28.2	5710	0.9	51.7	–	**–**	**3/A 06 L2**	**BN 180M 4**	**M 5LA 4**	15200	17200	37300	43400	11400	305
29.7	5430	1.5	49.2	–	**–**	**3/A 07 L2**	**BN 180M 4**	**M 5LA 4**	16600	20800	39500	51800	14400	317
35	4580	2.1	41.5	–	**–**	**3/A 07 L2**	**BN 180M 4**	**M 5LA 4**	15700	19600	37600	49200	13600	317
36	4530	1.1	41.1	–	**–**	**3/A 06 L2**	**BN 180M 4**	**M 5LA 4**	14000	15900	34800	40500	10500	305
42	3850	0.9	34.9	–	**–**	**3/A 06 L2**	**BN 180M 4**	**M 5LA 4**	13300	15100	33200	38600	9990	305
45	3610	1.1	32.7	–	**–**	**3/A 06 L2**	**BN 180M 4**	**M 5LA 4**	13000	14700	32500	37900	9780	305
45	3570	2.2	32.3	–	**–**	**3/A 07 L2**	**BN 180M 4**	**M 5LA 4**	14400	18100	34900	45700	12500	317
53	3060	1.1	27.7	–	**–**	**3/A 06 L2**	**BN 180M 4**	**M 5LA 4**	12300	14000	30900	36000	9250	305
54	2990	2.2	27.1	–	**–**	**3/A 07 L2**	**BN 180M 4**	**M 5LA 4**	13600	17000	33100	43300	11800	317

P_1 = 22 kW

n_2 min^{-1}	M_{n2} Nm	f_S	i	Pt kW					Rn_2 [N] MC/PC	MZ/PZ	HC	HZ	FZ	
0.29	523300	1.1	5040	–	**3/V 21 L4**	**–**	**BN 180L 4**	**–**	–	–	779000	923000	1200000	440
0.32	502300	1.1	4550	–	**3/V 21 L4**	**–**	**BN 180L 4**	**–**	–	–	779000	923000	1200000	440
0.39	417300	1.1	3780	–	**3/V 21 L4**	**–**	**BN 180L 4**	**–**	–	–	779000	923000	1200000	440
0.41	406900	1.3	3600	–	**3/V 21 L4**	**–**	**BN 180L 4**	**–**	–	–	779000	923000	1200000	440
0.45	360900	1.0	3231	–	**3/V 19 L4**	**–**	**BN 180L 4**	**–**	–	–	638000	702000	200000	430
0.54	312300	1.7	2700	–	**3/V 21 L4**	**–**	**BN 180L 4**	**–**	–	–	779000	923000	1200000	440
0.57	288400	1.3	2582	–	**3/V 19 L4**	**–**	**BN 180L 4**	**–**	–	–	638000	702000	200000	430
0.58	284800	1.8	2520	–	**3/V 21 L4**	**–**	**BN 180L 4**	**–**	–	–	779000	923000	1200000	440
0.59	275300	1.0	2464	–	**3/V 18 L4**	**–**	**BN 180L 4**	**–**	–	–	503000	565000	200000	420
0.64	263100	2.1	2275	–	**3/V 21 L4**	**–**	**BN 180L 4**	**–**	–	–	779000	923000	1200000	440

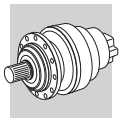

P_1 = 22 kW

n_2	M_{n2}	f_S	i	Pt					Rn_2 [N]					
min^{-1}	Nm			kW					MC/PC	MZ/PZ	HC	HZ	FZ	
0.77	218600	2.1	1890	–	**3/V 21 L4**	**–**	**BN 180L 4**	**–**	–	–	779000	923000	1200000	440
0.79	213700	1.3	1848	–	**3/V 18 L4**	**–**	**BN 180L 4**	**–**	–	–	503000	565000	200000	420
0.81	212900	2.5	1800	–	**3/V 21 L4**	**–**	**BN 180L 4**	**–**	–	–	779000	923000	1200000	440
0.82	198800	0.9	1780	–	**3/V 17 L4**	**–**	**BN 180L 4**	**–**	–	–	442000	470000	150000	410
0.84	202100	1.4	1748	–	**3/V 18 L4**	**–**	**BN 180L 4**	**–**	–	–	503000	565000	200000	420
0.96	179400	2.9	1517	–	**3/V 21 L4**	**–**	**BN 180L 4**	**–**	–	–	779000	923000	1200000	440
0.99	170300	1.5	1473	–	**3/V 18 L4**	**–**	**BN 180L 4**	**–**	–	–	503000	563100	198800	420
1.1	146100	1.1	1365	–	**3/V 17 L3**	**–**	**BN 180L 4**	**–**	–	–	429900	457700	145400	410
1.2	149000	2.9	1260	–	**3/V 21 L4**	**–**	**BN 180L 4**	**–**	–	–	742400	880400	1132200	440
1.2	144100	1.9	1232	–	**3/V 18 L4**	**–**	**BN 180L 4**	**–**	–	–	503000	533700	187300	420
1.2	138300	1.1	1215	–	**3/V 17 L3**	**–**	**BN 180L 4**	**–**	–	–	415100	442000	139800	410
1.3	136300	2.0	1165	–	**3/V 18 L4**	**–**	**BN 180L 4**	**–**	–	–	503000	524900	183800	420
1.3	121400	1.1	1134	–	**3/V 17 L3**	**–**	**BN 180L 4**	**–**	–	–	406600	432900	136600	410
1.4	113400	1.1	1059	–	**3/V 16 L3**	**–**	**BN 180L 4**	**–**	–	–	309800	344600	133600	400
1.4	116500	1.1	1024	–	**3/V 17 L3**	**–**	**BN 180L 4**	**–**	–	–	394300	419900	132100	410
1.5	114800	2.1	982	–	**3/V 18 L4**	**–**	**BN 180L 4**	**–**	–	–	488500	498600	173600	420
1.6	95500	1.1	893	–	**3/V 16 L3**	**–**	**BN 180L 4**	**–**	–	–	294300	327300	126200	400
1.7	96800	1.1	851	–	**3/V 17 L3**	**–**	**BN 180L 4**	**–**	–	–	373000	397100	124200	410
1.8	94400	1.5	810	–	**3/V 17 L3**	**–**	**BN 180L 4**	**–**	–	–	367600	391400	122100	410
1.8	90400	1.1	794	–	**3/V 16 L3**	**–**	**BN 180L 4**	**–**	–	–	284200	316100	121400	400
1.9	89500	2.1	765	–	**3/V 18 L4**	**–**	**BN 180L 4**	**–**	–	–	453300	462600	159800	420
2.1	79500	1.8	683	–	**3/V 17 L3**	**–**	**BN 180L 4**	**–**	–	–	349200	371800	115400	410
2.2	76200	1.1	669	–	**3/V 16 L3**	**–**	**BN 180L 4**	**–**	–	–	270000	300300	114600	400
2.2	76500	0.9	665	–	**3/V 14 L3**	**–**	**BN 180L 4**	**–**	–	–	162000	190200	68600	376
2.2	76500	1.2	665	–	**3/V 15 L3**	**–**	**BN 180L 4**	**–**	–	–	162000	190200	68600	388
2.4	72400	1.9	608	–	**3/V 17 L3**	**–**	**BN 180L 4**	**–**	–	–	337200	359000	111000	410
2.6	66100	1.8	567	–	**3/V 17 L3**	**–**	**BN 180L 4**	**–**	–	–	330300	351700	108500	410
2.6	64500	1.3	560	–	**3/V 15 L3**	**–**	**BN 180L 4**	**–**	–	–	153900	180700	64800	388
2.8	61700	1.8	530	–	**3/V 16 L3**	**–**	**BN 180L 4**	**–**	–	–	251700	279900	106000	400
2.9	61000	2.1	512	–	**3/V 17 L3**	**–**	**BN 180L 4**	**–**	–	–	320300	341000	104800	410
2.9	59400	1.0	498	–	**3/V 14 L3**	**–**	**BN 180L 4**	**–**	–	–	148600	174500	62300	376
2.9	59400	1.4	498	–	**3/V 15 L3**	**–**	**BN 180L 4**	**–**	–	–	148600	174500	62300	388
3.3	51400	0.9	446	–	**3/V 14 L3**	**–**	**BN 180L 4**	**–**	–	–	143800	168800	60100	376
3.3	51400	1.3	446	–	**3/V 15 L3**	**–**	**BN 180L 4**	**–**	–	–	143800	168800	60100	388
3.3	52000	1.8	446	–	**3/V 16 L3**	**–**	**BN 180L 4**	**–**	–	–	239100	265900	100100	400
3.4	50700	0.9	425	–	**3/V 13 L3**	**–**	**BN 180L 4**	**–**	–	–	132700	157100	52600	364
3.4	50700	2.1	425	–	**3/V 17 L3**	**–**	**BN 180L 4**	**–**	–	–	303000	322600	98500	410
3.6	49400	2.6	405	–	**3/V 17 L3**	**–**	**BN 180L 4**	**–**	–	–	298600	317900	96900	410
3.7	47400	1.0	397	–	**3/V 14 L3**	**–**	**BN 180L 4**	**–**	–	–	138800	163000	57800	376
3.7	47400	2.1	397	–	**3/V 16 L3**	**–**	**BN 180L 4**	**–**	–	–	230900	256800	96300	400
3.8	46600	1.4	386	–	**3/V 15 L3**	**–**	**BN 180L 4**	**–**	–	–	137700	161700	57300	388
3.9	42600	0.9	370	–	**3/V 13 L3**	**–**	**BN 180L 4**	**–**	–	–	127300	150700	50200	364
29.7	6460	1.3	49.2	–	**–**	**3/A 07 L2**	**BN 180L 4**	**–**	16600	20800	39500	51800	14400	317
35	5450	1.8	41.5	–	**–**	**3/A 07 L2**	**BN 180L 4**	**–**	15700	19600	37600	49200	13600	317
36	5390	0.9	41.1	–	**–**	**3/A 06 L2**	**BN 180L 4**	**–**	14000	15900	34800	40500	10500	305
45	4300	0.9	32.7	–	**–**	**3/A 06 L2**	**BN 180L 4**	**–**	13000	14700	32500	37900	9780	305
45	4240	1.9	32.3	–	**–**	**3/A 07 L2**	**BN 180L 4**	**–**	14400	18100	34900	45700	12500	317
53	3640	0.9	27.7	–	**–**	**3/A 06 L2**	**BN 180L 4**	**–**	12300	14000	30900	36000	9250	305
54	3560	1.9	27.1	–	**–**	**3/A 07 L2**	**BN 180L 4**	**–**	13600	17000	33100	43300	11800	317

25.3 RATING CHARTS FOR INLINE UNITS 300 L

Reading the rating chart.

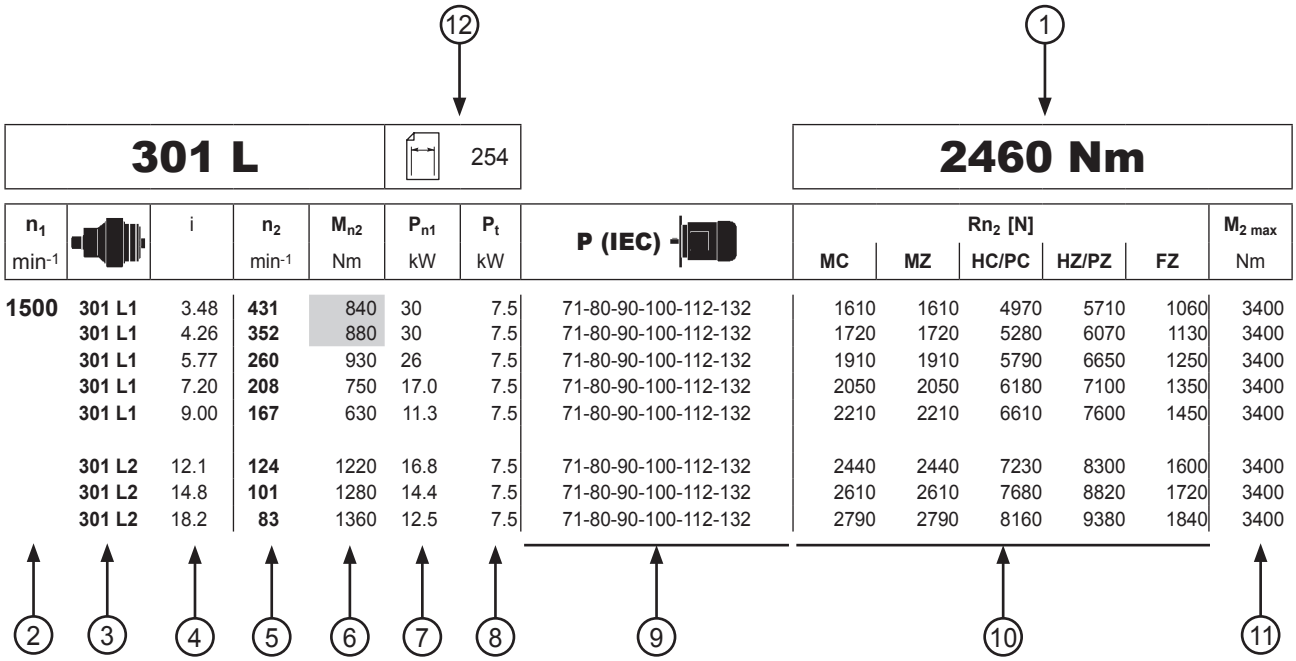

n_1 min^{-1}		i	n_2 min^{-1}	M_{n2} Nm	P_{n1} kW	P_t kW	P (IEC)	Rn_2 [N] MC	MZ	HC/PC	HZ/PZ	FZ	$M_{2\,max}$ Nm
1500	**301 L1**	3.48	**431**	840	30	7.5	71-80-90-100-112-132	1610	1610	4970	5710	1060	3400
	301 L1	4.26	**352**	880	30	7.5	71-80-90-100-112-132	1720	1720	5280	6070	1130	3400
	301 L1	5.77	**260**	930	26	7.5	71-80-90-100-112-132	1910	1910	5790	6650	1250	3400
	301 L1	7.20	**208**	750	17.0	7.5	71-80-90-100-112-132	2050	2050	6180	7100	1350	3400
	301 L1	9.00	**167**	630	11.3	7.5	71-80-90-100-112-132	2210	2210	6610	7600	1450	3400
	301 L2	12.1	**124**	1220	16.8	7.5	71-80-90-100-112-132	2440	2440	7230	8300	1600	3400
	301 L2	14.8	**101**	1280	14.4	7.5	71-80-90-100-112-132	2610	2610	7680	8820	1720	3400
	301 L2	18.2	**83**	1360	12.5	7.5	71-80-90-100-112-132	2790	2790	8160	9380	1840	3400

The rated torque of the gearbox, independent of installed mechanical power

1	Reference torque
2	Gearbox drive speed
3	Frame size of the in-line gear unit
4	Gear ratio
5	Gearbox output speed
6	Gearbox rated output torque based on: - service factor f_S=1 - 10000 h theoretical lifetime
7	Gearbox rated input power, based on: - service factor f_S=1 - 10000 h theoretical lifetime
8	Gearbox thermal capacity
9	Frame size of available IEC motor
10	Permitted overhung loading on output shaft, based on: - service factor f_S=1 - 10000 h theoretical lifetime - speed of output n_2 For forces not applied at shaft middlepoint, see diagrams provided in the specific gearbox overall dimensioning pages
11	Maximum torque
12	Dimensions page

B

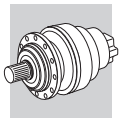

300 L

244

1250 Nm

n_1 min^{-1}		i	n_2 min^{-1}	M_{n2} Nm	P_{n1} kW	P_t kW	P (IEC)	Rn_2 [N] MC/PC	MZ/PZ	HC	HZ	FZ	$M_{2\,max}$ Nm
1500	**300 L1**	**3.48**	431	470	20	7.5	71-80-90-100-112-132	1610	1610	4970	5710	1060	2000
	300 L1	**4.26**	352	490	18.8	7.5	71-80-90-100-112-132	1720	1720	5280	6070	1130	2400
	300 L1	**5.77**	260	470	13.3	7.5	71-80-90-100-112-132	1910	1910	5790	6650	1250	2400
	300 L1	**7.20**	208	410	9.2	7.5	71-80-90-100-112-132	2050	2050	6180	7100	1350	2400
	300 L1	**9.00**	167	320	5.7	7.5	71-80-90-100-112-132	2210	2210	6610	7600	1450	2400
	300 L2	**12.1**	124	680	9.4	7.5	71-80-90-100-112-132	2440	2440	7230	8300	1600	2000
	300 L2	**14.8**	101	720	8.1	7.5	71-80-90-100-112-132	2610	2610	7680	8820	1720	2000
	300 L2	**18.2**	83	750	6.9	7.5	71-80-90-100-112-132	2790	2790	8160	9380	1840	2400
	300 L2	**20.1**	75	640	5.3	7.5	71-80-90-100-112-132	2890	2890	8410	9660	1900	2000
	300 L2	**24.6**	61	800	5.5	7.5	71-80-90-100-112-132	3090	3090	8940	10300	2030	2400
	300 L2	**30.7**	49	840	4.6	7.5	71-80-90-100-112-132	3330	3330	9550	11000	2190	2400
	300 L2	**33.3**	45	650	3.3	7.5	71-80-90-100-112-132	3420	3420	9790	11200	2250	2400
	300 L2	**38.4**	39	840	3.7	7.5	71-80-90-100-112-132	3590	3590	10200	11700	2360	2400
	300 L2	**41.5**	36	650	2.6	7.5	71-80-90-100-112-132	3680	3680	10500	12000	2420	2400
	300 L2	**51.9**	28.9	650	2.1	7.5	71-80-90-100-112-132	3970	3970	11200	12900	2610	2400
	300 L2	**64.8**	23.1	550	1.4	7.5	71-80-90-100-112-132	4270	4270	12000	13700	2810	2400
	300 L3	**51.6**	29.1	850	2.8	7.5	71-80-90-100-112-132	3960	3960	11200	12800	2600	2000
	300 L3	**63.2**	23.7	850	2.3	7.5	71-80-90-100-112-132	4240	4240	11900	13600	2780	2400
	300 L3	**69.9**	21.5	650	1.6	7.5	71-80-90-100-112-132	4380	4380	12200	14000	2880	2000
	300 L3	**77.5**	19.4	850	1.9	7.5	71-80-90-100-112-132	4530	4530	12600	14500	2980	2400
	300 L3	**85.6**	17.5	850	1.7	7.5	71-80-90-100-112-132	4680	4680	13000	14900	3080	2400
	300 L3	**105**	14.3	860	1.4	7.5	71-80-90-100-112-132	5010	5010	13800	15900	3300	2400
	300 L3	**116**	13.0	650	0.97	7.5	71-80-90-100-112-132	5180	5180	14200	16300	3410	2400
	300 L3	**131**	11.5	860	1.1	7.5	71-80-90-100-112-132	5400	5400	14800	17000	3550	2400
	300 L3	**142**	10.6	860	1.0	7.5	71-80-90-100-112-132	5540	5540	15100	17400	3650	2400
	300 L3	**177**	8.5	880	0.86	7.5	71-80-90-100-112-132	5970	5970	16200	18600	3920	2400
	300 L3	**192**	7.8	650	0.58	7.5	71-80-90-100-112-132	6130	6130	16600	19000	4030	2400
	300 L3	**221**	6.8	910	0.71	7.5	71-80-90-100-112-132	6430	6430	17300	19800	4230	2400
	300 L3	**240**	6.3	650	0.47	7.5	71-80-90-100-112-132	6600	6600	17700	20300	4340	2400
	300 L3	**299**	5.0	650	0.37	7.5	71-80-90-100-112-132	7110	7110	18900	21700	4670	2400
	300 L3	**374**	4.0	670	0.31	7.5	71-80-90-100-112-132	7660	7660	20200	23200	5030	2400
	300 L4	**330**	4.5	970	0.52	6.0	71-80-90-100-112-132	7350	7350	19500	22400	4830	2400
	300 L4	**403**	3.7	680	0.30	6.0	71-80-90-100-112-132	7850	7850	20700	23800	5160	2400
	300 L4	**447**	3.4	1020	0.40	6.0	71-80-90-100-112-132	8130	8130	21300	24500	5340	2400
	300 L4	**494**	3.0	1030	0.37	6.0	71-80-90-100-112-132	8400	8400	22000	25300	5520	2400
	300 L4	**558**	2.7	1060	0.34	6.0	71-80-90-100-112-132	8750	8750	22800	26200	5750	2400
	300 L4	**616**	2.4	1070	0.31	6.0	71-80-90-100-112-132	9050	9050	23500	27000	5950	2400
	300 L4	**755**	2.0	1110	0.26	6.0	71-80-90-100-112-132	9680	9680	25000	28700	6360	2400
	300 L4	**819**	1.8	1130	0.24	6.0	71-80-90-100-112-132	9940	9940	25600	29400	6540	2400
	300 L4	**942**	1.6	1160	0.22	6.0	71-80-90-100-112-132	10400	10400	26700	30700	6850	2400
	300 L4	**1022**	1.5	1170	0.20	6.0	71-80-90-100-112-132	10700	10700	27300	31400	7040	2400
	300 L4	**1108**	1.4	810	0.13	6.0	71-80-90-100-112-132	11000	11000	28000	32200	7230	2400
	300 L4	**1275**	1.2	1220	0.17	6.0	71-80-90-100-112-132	11500	11500	29200	33600	7580	2400
	300 L4	**1383**	1.1	850	0.11	6.0	71-80-90-100-112-132	11800	11800	29900	34000	7790	2400
	300 L4	**1591**	0.94	1250	0.14	6.0	71-80-90-100-112-132	12000	12400	31000	34000	8000	2400
	300 L4	**1725**	0.87	860	0.09	6.0	71-80-90-100-112-132	12000	12500	31000	34000	8000	2400
	300 L4	**2153**	0.70	860	0.07	6.0	71-80-90-100-112-132	12000	12500	31000	34000	8000	2400
	300 L4	**2692**	0.56	1000	0.07	6.0	71-80-90-100-112-132	12000	12500	31000	34000	8000	2400
1000	**300 L1**	**3.48**	287	530	16.5	9.0	71-80-90-100-112-132	1840	1840	5610	6450	1210	2000
	300 L1	**4.26**	235	560	14.1	9.0	71-80-90-100-112-132	1970	1970	5970	6860	1300	2400
	300 L1	**5.77**	173	530	10.0	9.0	71-80-90-100-112-132	2180	2180	6530	7510	1430	2400
	300 L1	**7.20**	139	460	6.9	9.0	71-80-90-100-112-132	2350	2350	6980	8020	1540	2400
	300 L1	**9.00**	111	360	4.3	9.0	71-80-90-100-112-132	2530	2530	7470	8580	1660	2400
	300 L2	**12.1**	83	730	6.7	9.0	71-80-90-100-112-132	2790	2790	8160	9380	1840	2000
	300 L2	**14.8**	67	790	5.9	9.0	71-80-90-100-112-132	2990	2990	8670	9970	1970	2000
	300 L2	**18.2**	55	820	5.0	9.0	71-80-90-100-112-132	3200	3200	9220	10600	2100	2400
	300 L2	**20.1**	50	650	3.6	9.0	71-80-90-100-112-132	3310	3310	9500	10900	2170	2000
	300 L2	**24.6**	41	840	3.8	9.0	71-80-90-100-112-132	3540	3540	10100	11600	2330	2400
	300 L2	**30.7**	33	850	3.1	9.0	71-80-90-100-112-132	3810	3810	10800	12400	2500	2400
	300 L2	**33.3**	30	650	2.2	9.0	71-80-90-100-112-132	3910	3910	11100	12700	2570	2400
	300 L2	**38.4**	26.1	850	2.5	9.0	71-80-90-100-112-132	4100	4100	11500	13300	2700	2400

B

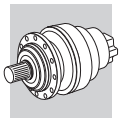

300 L

244

1250 Nm

n_1 min^{-1}		i	n_2 min^{-1}	M_{n2} Nm	P_{n1} kW	P_t kW	P (IEC)	Rn_2 [N] MC/PC	MZ/PZ	HC	HZ	FZ	$M_{2\,max}$ Nm
1000	**300 L2**	**41.5**	24.1	650	1.7	9.0	71-80-90-100-112-132	4210	4210	11800	13600	2770	2400
	300 L2	**51.9**	19.3	650	1.4	9.0	71-80-90-100-112-132	4540	4540	12600	14500	2980	2400
	300 L2	**64.8**	15.4	550	0.94	9.0	71-80-90-100-112-132	4890	4890	13500	15500	3210	2400
	300 L3	**51.6**	19.4	850	1.9	9.0	71-80-90-100-112-132	4530	4530	12600	14500	2980	2000
	300 L3	**63.2**	15.8	850	1.5	9.0	71-80-90-100-112-132	4850	4850	13400	15400	3190	2400
	300 L3	**69.9**	14.3	650	1.1	9.0	71-80-90-100-112-132	5010	5010	13800	15900	3290	2000
	300 L3	**77.5**	12.9	860	1.3	9.0	71-80-90-100-112-132	5190	5190	14200	16400	3410	2400
	300 L3	**85.6**	11.7	860	1.2	9.0	71-80-90-100-112-132	5360	5360	14700	16900	3530	2400
	300 L3	**105**	9.5	870	0.95	9.0	71-80-90-100-112-132	5740	5740	15600	17900	3770	2400
	300 L3	**116**	8.6	650	0.64	9.0	71-80-90-100-112-132	5930	5930	16100	18500	3900	2400
	300 L3	**131**	7.6	890	0.78	9.0	71-80-90-100-112-132	6180	6180	16700	19200	4060	2400
	300 L3	**142**	7.0	900	0.73	9.0	71-80-90-100-112-132	6350	6350	17100	19600	4170	2400
	300 L3	**177**	5.6	930	0.60	9.0	71-80-90-100-112-132	6830	6830	18300	21000	4490	2400
	300 L3	**192**	5.2	650	0.39	9.0	71-80-90-100-112-132	7020	7020	18700	21500	4620	2400
	300 L3	**221**	4.5	970	0.50	9.0	71-80-90-100-112-132	7360	7360	19500	22400	4840	2400
	300 L3	**240**	4.2	670	0.32	9.0	71-80-90-100-112-132	7560	7560	20000	23000	4970	2400
	300 L3	**299**	3.3	700	0.27	9.0	71-80-90-100-112-132	8140	8140	21400	24500	5350	2400
	300 L3	**374**	2.7	720	0.22	9.0	71-80-90-100-112-132	8770	8770	22800	26200	5760	2400
	300 L4	**330**	3.0	1040	0.37	7.2	71-80-90-100-112-132	8410	8410	22000	25300	5530	2400
	300 L4	**403**	2.5	730	0.21	7.2	71-80-90-100-112-132	8990	8990	23400	26800	5910	2400
	300 L4	**447**	2.2	1090	0.29	7.2	71-80-90-100-112-132	9300	9300	24100	27700	6120	2400
	300 L4	**494**	2.0	1110	0.27	7.2	71-80-90-100-112-132	9620	9620	24800	28500	6320	2400
	300 L4	**558**	1.8	1130	0.24	7.2	71-80-90-100-112-132	10000	10000	25800	29600	6590	2400
	300 L4	**616**	1.6	1150	0.22	7.2	71-80-90-100-112-132	10400	10400	26500	30500	6810	2400
	300 L4	**755**	1.3	1190	0.19	7.2	71-80-90-100-112-132	11100	11100	28200	32400	7280	2400
	300 L4	**819**	1.2	1210	0.17	7.2	71-80-90-100-112-132	11400	11400	28900	33200	7480	2400
	300 L4	**942**	1.1	1240	0.16	7.2	71-80-90-100-112-132	11900	11900	30100	34000	7840	2400
	300 L4	**1022**	0.98	1250	0.14	7.2	71-80-90-100-112-132	12000	12300	30900	34000	8000	2400
	300 L4	**1108**	0.90	860	0.09	7.2	71-80-90-100-112-132	12000	12500	31000	34000	8000	2400
	300 L4	**1275**	0.78	1250	0.12	7.2	71-80-90-100-112-132	12000	12500	31000	34000	8000	2400
	300 L4	**1383**	0.72	860	0.07	7.2	71-80-90-100-112-132	12000	12500	31000	34000	8000	2400
	300 L4	**1591**	0.63	1250	0.09	7.2	71-80-90-100-112-132	12000	12500	31000	34000	8000	2400
	300 L4	**1725**	0.58	860	0.06	7.2	71-80-90-100-112-132	12000	12500	31000	34000	8000	2400
	300 L4	**2153**	0.46	860	0.05	7.2	71-80-90-100-112-132	12000	12500	31000	34000	8000	2400
	300 L4	**2692**	0.37	1000	0.04	7.2	71-80-90-100-112-132	12000	12500	31000	34000	8000	2400
500	**300 L1**	**3.48**	144	650	10.2	15.0	71-80-90-100-112-132	2320	2320	6910	7940	1530	2000
	300 L1	**4.26**	117	690	8.7	15.0	71-80-90-100-112-132	2490	2490	7350	8440	1630	2400
	300 L1	**5.77**	87	630	5.9	15.0	71-80-90-100-112-132	2750	2750	8040	9240	1810	2400
	300 L1	**7.20**	69	530	4.0	15.0	71-80-90-100-112-132	2960	2960	8600	9880	1950	2400
	300 L1	**9.00**	56	370	2.2	15.0	71-80-90-100-112-132	3190	3190	9190	10600	2100	2400
	300 L2	**12.1**	41	730	3.4	15.0	71-80-90-100-112-132	3520	3520	10000	11500	2310	2000
	300 L2	**14.8**	34	840	3.2	15.0	71-80-90-100-112-132	3770	3770	10700	12300	2480	2000
	300 L2	**18.2**	27.5	850	2.6	15.0	71-80-90-100-112-132	4030	4030	11300	13000	2650	2400
	300 L2	**20.1**	24.9	650	1.8	15.0	71-80-90-100-112-132	4170	4170	11700	13400	2740	2000
	300 L2	**24.6**	20.3	850	1.9	15.0	71-80-90-100-112-132	4460	4460	12400	14300	2930	2400
	300 L2	**30.7**	16.3	850	1.5	15.0	71-80-90-100-112-132	4800	4800	13300	15300	3160	2400
	300 L2	**33.3**	15.0	650	1.1	15.0	71-80-90-100-112-132	4930	4930	13600	15600	3240	2400
	300 L2	**38.4**	13.0	860	1.2	15.0	71-80-90-100-112-132	5170	5170	14200	16300	3400	2400
	300 L2	**41.5**	12.0	650	0.87	15.0	71-80-90-100-112-132	5310	5310	14500	16700	3490	2400
	300 L2	**51.9**	9.6	650	0.70	15.0	71-80-90-100-112-132	5720	5720	15600	17900	3760	2400
	300 L2	**64.8**	7.7	550	0.47	15.0	71-80-90-100-112-132	6160	6160	16600	19100	4050	2400
	300 L3	**51.6**	9.7	860	0.96	15.0	71-80-90-100-112-132	5710	5710	15500	17800	3750	2000
	300 L3	**63.2**	7.9	890	0.81	15.0	71-80-90-100-112-132	6110	6110	16500	19000	4020	2400
	300 L3	**69.9**	7.2	650	0.53	15.0	71-80-90-100-112-132	6310	6310	17000	19500	4150	2000
	300 L3	**77.5**	6.5	920	0.68	15.0	71-80-90-100-112-132	6540	6540	17500	20100	4300	2400
	300 L3	**85.6**	5.8	930	0.62	15.0	71-80-90-100-112-132	6760	6760	18100	20800	4440	2400
	300 L3	**105**	4.8	960	0.52	15.0	71-80-90-100-112-132	7230	7230	19200	22100	4750	2400
	300 L3	**116**	4.3	670	0.33	15.0	71-80-90-100-112-132	7470	7470	19800	22700	4910	2400
	300 L3	**131**	3.8	990	0.44	15.0	71-80-90-100-112-132	7780	7780	20500	23600	5120	2400
	300 L3	**142**	3.5	1010	0.41	15.0	71-80-90-100-112-132	8000	8000	21000	24200	5260	2400

B

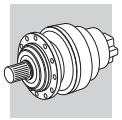

300 L

244

1250 Nm

n_1 min^{-1}		i	n_2 min^{-1}	M_{n2} Nm	P_{n1} kW	P_t kW	P (IEC)	Rn_2 [N] MC/PC	MZ/PZ	HC	HZ	FZ	$M_{2\,max}$ Nm
500	**300 L3**	**177**	2.8	1050	0.34	15.0	71-80-90-100-112-132	8610	8610	22500	25800	5660	2400
	300 L3	**192**	2.6	730	0.22	15.0	71-80-90-100-112-132	8850	8850	23000	26500	5820	2400
	300 L3	**221**	2.3	1090	0.28	15.0	71-80-90-100-112-132	9270	9270	24000	27600	6090	2400
	300 L3	**240**	2.1	750	0.18	15.0	71-80-90-100-112-132	9520	9520	24600	28300	6260	2400
	300 L3	**299**	1.7	780	0.15	15.0	71-80-90-100-112-132	10300	10300	26300	30200	6740	2400
	300 L3	**374**	1.3	820	0.13	15.0	71-80-90-100-112-132	11000	11000	28100	32300	7260	2400
	300 L4	**330**	1.5	1170	0.21	12.0	71-80-90-100-112-132	10600	10600	27100	31100	6970	2400
	300 L4	**403**	1.2	830	0.12	12.0	71-80-90-100-112-132	11300	11300	28800	33000	7450	2400
	300 L4	**447**	1.1	1230	0.16	12.0	71-80-90-100-112-132	11700	11700	29700	34000	7710	2400
	300 L4	**494**	1.0	1250	0.15	12.0	71-80-90-100-112-132	12000	12100	30600	34000	7970	2400
	300 L4	**558**	0.90	1250	0.13	12.0	71-80-90-100-112-132	12000	12500	31000	34000	8000	2400
	300 L4	**616**	0.81	1250	0.12	12.0	71-80-90-100-112-132	12000	12500	31000	34000	8000	2400
	300 L4	**755**	0.66	1250	0.10	12.0	71-80-90-100-112-132	12000	12500	31000	34000	8000	2400
	300 L4	**819**	0.61	1250	0.09	12.0	71-80-90-100-112-132	12000	12500	31000	34000	8000	2400
	300 L4	**942**	0.53	1250	0.08	12.0	71-80-90-100-112-132	12000	12500	31000	34000	8000	2400
	300 L4	**1022**	0.49	1250	0.07	12.0	71-80-90-100-112-132	12000	12500	31000	34000	8000	2400
	300 L4	**1108**	0.45	860	0.05	12.0	71-80-90-100-112-132	12000	12500	31000	34000	8000	2400
	300 L4	**1275**	0.39	1250	0.06	12.0	71-80-90-100-112-132	12000	12500	31000	34000	8000	2400
	300 L4	**1383**	0.36	860	0.04	12.0	71-80-90-100-112-132	12000	12500	31000	34000	8000	2400
	300 L4	**1591**	0.31	1250	0.05	12.0	71-80-90-100-112-132	12000	12500	31000	34000	8000	2400
	300 L4	**1725**	0.29	860	0.03	12.0	71-80-90-100-112-132	12000	12500	31000	34000	8000	2400
	300 L4	**2153**	0.23	860	0.02	12.0	71-80-90-100-112-132	12000	12500	31000	34000	8000	2400
	300 L4	**2692**	0.19	1000	0.02	12.0	71-80-90-100-112-132	12000	12500	31000	34000	8000	2400

301 L

254

2460 Nm

n_1 min^{-1}		i	n_2 min^{-1}	M_{n2} Nm	P_{n1} kW	P_t kW	P (IEC)	Rn_2 [N] MC	MZ	HC/PC	HZ/PZ	FZ	$M_{2\,max}$ Nm
1500	**301 L1**	**3.48**	431	840	30	7.5	71-80-90-100-112-132	1610	1610	4970	5710	1060	3400
	301 L1	**4.26**	352	880	30	7.5	71-80-90-100-112-132	1720	1720	5280	6070	1130	3400
	301 L1	**5.77**	260	930	26	7.5	71-80-90-100-112-132	1910	1910	5790	6650	1250	3400
	301 L1	**7.20**	208	750	17.0	7.5	71-80-90-100-112-132	2050	2050	6180	7100	1350	3400
	301 L1	**9.00**	167	630	11.3	7.5	71-80-90-100-112-132	2210	2210	6610	7600	1450	3400
	301 L2	**12.1**	124	1220	16.8	7.5	71-80-90-100-112-132	2440	2440	7230	8300	1600	3400
	301 L2	**14.8**	101	1280	14.4	7.5	71-80-90-100-112-132	2610	2610	7680	8820	1720	3400
	301 L2	**18.2**	83	1360	12.5	7.5	71-80-90-100-112-132	2790	2790	8160	9380	1840	3400
	301 L2	**20.1**	75	1260	10.5	7.5	71-80-90-100-112-132	2890	2890	8410	9660	1900	3400
	301 L2	**24.6**	61	1490	10.1	7.5	71-80-90-100-112-132	3090	3090	8940	10300	2030	3400
	301 L2	**30.7**	49	1580	8.6	7.5	71-80-90-100-112-132	3330	3330	9550	11000	2190	3400
	301 L2	**33.3**	45	1300	6.5	7.5	71-80-90-100-112-132	3420	3420	9790	11200	2250	3400
	301 L2	**38.4**	39	1540	6.7	7.5	71-80-90-100-112-132	3590	3590	10200	11700	2360	3400
	301 L2	**41.5**	36	1300	5.2	7.5	71-80-90-100-112-132	3680	3680	10500	12000	2420	3400
	301 L2	**51.9**	28.9	1300	4.2	7.5	71-80-90-100-112-132	3970	3970	11200	12900	2610	3400
	301 L2	**64.8**	23.1	1150	3.0	7.5	71-80-90-100-112-132	4270	4270	12000	13700	2810	3400
	301 L3	**51.6**	29.1	1630	5.4	7.5	71-80-90-100-112-132	3960	3960	11200	12800	2600	3400
	301 L3	**63.2**	23.7	1650	4.5	7.5	71-80-90-100-112-132	4240	4240	11900	13600	2780	3400
	301 L3	**69.9**	21.5	1300	3.2	7.5	71-80-90-100-112-132	4380	4380	12200	14000	2880	3400
	301 L3	**77.5**	19.4	1670	3.7	7.5	71-80-90-100-112-132	4530	4530	12600	14500	2980	3400
	301 L3	**85.6**	17.5	1680	3.4	7.5	71-80-90-100-112-132	4680	4680	13000	14900	3080	3400
	301 L3	**105**	14.3	1700	2.8	7.5	71-80-90-100-112-132	5010	5010	13800	15900	3300	3400
	301 L3	**116**	13.0	1300	1.9	7.5	71-80-90-100-112-132	5180	5180	14200	16300	3410	3400
	301 L3	**131**	11.5	1720	2.3	7.5	71-80-90-100-112-132	5400	5400	14800	17000	3550	3400
	301 L3	**142**	10.6	1720	2.1	7.5	71-80-90-100-112-132	5540	5540	15100	17400	3650	3400
	301 L3	**177**	8.5	1770	1.7	7.5	71-80-90-100-112-132	5970	5970	16200	18600	3920	3400
	301 L3	**192**	7.8	1300	1.2	7.5	71-80-90-100-112-132	6130	6130	16600	19000	4030	3400
	301 L3	**221**	6.8	1790	1.4	7.5	71-80-90-100-112-132	6430	6430	17300	19800	4230	3400
	301 L3	**240**	6.3	1300	0.93	7.5	71-80-90-100-112-132	6600	6600	17700	20300	4340	3400
	301 L3	**299**	5.0	1300	0.75	7.5	71-80-90-100-112-132	7110	7110	18900	21700	4670	3400
	301 L3	**374**	4.0	1350	0.62	7.5	71-80-90-100-112-132	7660	7660	20200	23200	5030	3400

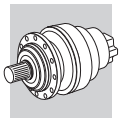

301 L

254

2460 Nm

n_1 min^{-1}		i	n_2 min^{-1}	M_{n2} Nm	P_{n1} kW	P_t kW	P (IEC)	Rn_2 [N] MC	MZ	HC/PC	HZ/PZ	FZ	$M_{2\,max}$ Nm
1500	**301 L4**	**330**	4.5	1920	1.0	6.0	71-80-90-100-112-132	7350	7350	19500	22400	4830	3400
	301 L4	**403**	3.7	1370	0.60	6.0	71-80-90-100-112-132	7850	7850	20700	23800	5160	3400
	301 L4	**447**	3.4	2030	0.81	6.0	71-80-90-100-112-132	8130	8130	21300	24500	5340	3400
	301 L4	**494**	3.0	2070	0.74	6.0	71-80-90-100-112-132	8400	8400	22000	25300	5520	3400
	301 L4	**558**	2.7	2110	0.67	6.0	71-80-90-100-112-132	8750	8750	22800	26200	5750	3400
	301 L4	**616**	2.4	2150	0.62	6.0	71-80-90-100-112-132	9050	9050	23500	27000	5950	3400
	301 L4	**755**	2.0	2220	0.52	6.0	71-80-90-100-112-132	9680	9680	25000	28700	6360	3400
	301 L4	**819**	1.8	2240	0.49	6.0	71-80-90-100-112-132	9940	9940	25600	29400	6540	3400
	301 L4	**942**	1.6	2290	0.43	6.0	71-80-90-100-112-132	10400	10400	26700	30700	6850	3400
	301 L4	**1022**	1.5	2320	0.40	6.0	71-80-90-100-112-132	10700	10700	27300	31400	7040	3400
	301 L4	**1108**	1.4	1630	0.26	6.0	71-80-90-100-112-132	11000	11000	28000	32200	7230	3400
	301 L4	**1275**	1.2	2400	0.33	6.0	71-80-90-100-112-132	11500	11500	29200	33600	7580	3400
	301 L4	**1383**	1.1	1700	0.22	6.0	71-80-90-100-112-132	11800	11800	29900	34000	7790	3400
	301 L4	**1591**	0.94	2000	0.22	6.0	71-80-90-100-112-132	12000	12400	31000	34000	8000	3400
	301 L4	**1725**	0.87	1720	0.18	6.0	71-80-90-100-112-132	12000	12500	31000	34000	8000	3400
	301 L4	**2153**	0.70	1720	0.14	6.0	71-80-90-100-112-132	12000	12500	31000	34000	8000	3400
	301 L4	**2692**	0.56	1720	0.11	6.0	71-80-90-100-112-132	12000	12500	31000	34000	8000	3400
1000	**301 L1**	**3.48**	287	950	29	9.0	71-80-90-100-112-132	1840	1840	5610	6450	1210	3400
	301 L1	**4.26**	235	990	25	9.0	71-80-90-100-112-132	1970	1970	5970	6860	1300	3400
	301 L1	**5.77**	173	1050	19.7	9.0	71-80-90-100-112-132	2180	2180	6530	7510	1430	3400
	301 L1	**7.20**	139	850	12.8	9.0	71-80-90-100-112-132	2350	2350	6980	8020	1540	3400
	301 L1	**9.00**	111	710	8.5	9.0	71-80-90-100-112-132	2530	2530	7470	8580	1660	3400
	301 L2	**12.1**	83	1330	12.3	9.0	71-80-90-100-112-132	2790	2790	8160	9380	1840	3400
	301 L2	**14.8**	67	1440	10.8	9.0	71-80-90-100-112-132	2990	2990	8670	9970	1970	3400
	301 L2	**18.2**	55	1530	9.4	9.0	71-80-90-100-112-132	3200	3200	9220	10600	2100	3400
	301 L2	**20.1**	50	1300	7.2	9.0	71-80-90-100-112-132	3310	3310	9500	10900	2170	3400
	301 L2	**24.6**	41	1600	7.2	9.0	71-80-90-100-112-132	3540	3540	10100	11600	2330	3400
	301 L2	**30.7**	33	1620	5.9	9.0	71-80-90-100-112-132	3810	3810	10800	12400	2500	3400
	301 L2	**33.3**	30	1300	4.3	9.0	71-80-90-100-112-132	3910	3910	11100	12700	2570	3400
	301 L2	**38.4**	26.1	1550	4.5	9.0	71-80-90-100-112-132	4100	4100	11500	13300	2700	3400
	301 L2	**41.5**	24.1	1300	3.5	9.0	71-80-90-100-112-132	4210	4210	11800	13600	2770	3400
	301 L2	**51.9**	19.3	1300	2.8	9.0	71-80-90-100-112-132	4540	4540	12600	14500	2980	3400
	301 L2	**64.8**	15.4	1150	2.0	9.0	71-80-90-100-112-132	4890	4890	13500	15500	3210	3400
	301 L3	**51.6**	19.4	1670	3.7	9.0	71-80-90-100-112-132	4530	4530	12600	14500	2980	3400
	301 L3	**63.2**	15.8	1690	3.1	9.0	71-80-90-100-112-132	4850	4850	13400	15400	3190	3400
	301 L3	**69.9**	14.3	1300	2.1	9.0	71-80-90-100-112-132	5010	5010	13800	15900	3290	3400
	301 L3	**77.5**	12.9	1710	2.5	9.0	71-80-90-100-112-132	5190	5190	14200	16400	3410	3400
	301 L3	**85.6**	11.7	1710	2.3	9.0	71-80-90-100-112-132	5360	5360	14700	16900	3530	3400
	301 L3	**105**	9.5	1740	1.9	9.0	71-80-90-100-112-132	5740	5740	15600	17900	3770	3400
	301 L3	**116**	8.6	1300	1.3	9.0	71-80-90-100-112-132	5930	5930	16100	18500	3900	3400
	301 L3	**131**	7.6	1790	1.6	9.0	71-80-90-100-112-132	6180	6180	16700	19200	4060	3400
	301 L3	**142**	7.0	1810	1.5	9.0	71-80-90-100-112-132	6350	6350	17100	19600	4170	3400
	301 L3	**177**	5.6	1860	1.2	9.0	71-80-90-100-112-132	6830	6830	18300	21000	4490	3400
	301 L3	**192**	5.2	1300	0.78	9.0	71-80-90-100-112-132	7020	7020	18700	21500	4620	3400
	301 L3	**221**	4.5	1850	0.96	9.0	71-80-90-100-112-132	7360	7360	19500	22400	4840	3400
	301 L3	**240**	4.2	1340	0.64	9.0	71-80-90-100-112-132	7560	7560	20000	23000	4970	3400
	301 L3	**299**	3.3	1390	0.53	9.0	71-80-90-100-112-132	8140	8140	21400	24500	5350	3400
	301 L3	**374**	2.7	1440	0.44	9.0	71-80-90-100-112-132	8770	8770	22800	26200	5760	3400
	301 L4	**330**	3.0	2070	0.74	7.2	71-80-90-100-112-132	8410	8410	22000	25300	5530	3400
	301 L4	**403**	2.5	1460	0.43	7.2	71-80-90-100-112-132	8990	8990	23400	26800	5910	3400
	301 L4	**447**	2.2	2180	0.58	7.2	71-80-90-100-112-132	9300	9300	24100	27700	6120	3400
	301 L4	**494**	2.0	2210	0.53	7.2	71-80-90-100-112-132	9620	9620	24800	28500	6320	3400
	301 L4	**558**	1.8	2250	0.48	7.2	71-80-90-100-112-132	10000	10000	25800	29600	6590	3400
	301 L4	**616**	1.6	2290	0.44	7.2	71-80-90-100-112-132	10400	10400	26500	30500	6810	3400
	301 L4	**755**	1.3	2360	0.37	7.2	71-80-90-100-112-132	11100	11100	28200	32400	7280	3400
	301 L4	**819**	1.2	2390	0.34	7.2	71-80-90-100-112-132	11400	11400	28900	33200	7480	3400
	301 L4	**942**	1.1	2440	0.31	7.2	71-80-90-100-112-132	11900	11900	30100	34000	7840	3400
	301 L4	**1022**	0.98	2460	0.28	7.2	71-80-90-100-112-132	12000	12300	30900	34000	8000	3400
	301 L4	**1108**	0.90	1720	0.18	7.2	71-80-90-100-112-132	12000	12500	31000	34000	8000	3400
	301 L4	**1275**	0.78	2460	0.23	7.2	71-80-90-100-112-132	12000	12500	31000	34000	8000	3400
	301 L4	**1383**	0.72	1720	0.15	7.2	71-80-90-100-112-132	12000	12500	31000	34000	8000	3400

B

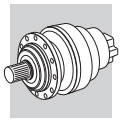

301 L

254

2460 Nm

n_1 min^{-1}		i	n_2 min^{-1}	M_{n2} Nm	P_{n1} kW	P_t kW	P (IEC)	Rn_2 [N] MC	MZ	HC/PC	HZ/PZ	FZ	$M_{2\,max}$ Nm
1000	**301 L4**	**1591**	0.63	2000	0.15	7.2	71-80-90-100-112-132	12000	12500	31000	34000	8000	3400
	301 L4	**1725**	0.58	1720	0.12	7.2	71-80-90-100-112-132	12000	12500	31000	34000	8000	3400
	301 L4	**2153**	0.46	1720	0.09	7.2	71-80-90-100-112-132	12000	12500	31000	34000	8000	3400
	301 L4	**2692**	0.37	1720	0.08	7.2	71-80-90-100-112-132	12000	12500	31000	34000	8000	3400
500	**301 L1**	**3.48**	144	1170	18.1	15.0	71-80-90-100-112-132	2320	2320	6910	7940	1530	3400
	301 L1	**4.26**	117	1220	15.4	15.0	71-80-90-100-112-132	2490	2490	7350	8440	1630	3400
	301 L1	**5.77**	87	1250	11.7	15.0	71-80-90-100-112-132	2750	2750	8040	9240	1810	3400
	301 L1	**7.20**	69	1050	7.8	15.0	71-80-90-100-112-132	2960	2960	8600	9880	1950	3400
	301 L1	**9.00**	56	730	4.4	15.0	71-80-90-100-112-132	3190	3190	9190	10600	2100	3400
	301 L2	**12.1**	41	1430	6.6	15.0	71-80-90-100-112-132	3520	3520	10000	11500	2310	3400
	301 L2	**14.8**	34	1620	6.1	15.0	71-80-90-100-112-132	3770	3770	10700	12300	2480	3400
	301 L2	**18.2**	27.5	1630	5.0	15.0	71-80-90-100-112-132	4030	4030	11300	13000	2650	3400
	301 L2	**20.1**	24.9	1300	3.6	15.0	71-80-90-100-112-132	4170	4170	11700	13400	2740	3400
	301 L2	**24.6**	20.3	1660	3.8	15.0	71-80-90-100-112-132	4460	4460	12400	14300	2930	3400
	301 L2	**30.7**	16.3	1680	3.1	15.0	71-80-90-100-112-132	4800	4800	13300	15300	3160	3400
	301 L2	**33.3**	15.0	1300	2.2	15.0	71-80-90-100-112-132	4930	4930	13600	15600	3240	3400
	301 L2	**38.4**	13.0	1560	2.3	15.0	71-80-90-100-112-132	5170	5170	14200	16300	3400	3400
	301 L2	**41.5**	12.0	1300	1.7	15.0	71-80-90-100-112-132	5310	5310	14500	16700	3490	3400
	301 L2	**51.9**	9.6	1300	1.4	15.0	71-80-90-100-112-132	5720	5720	15600	17900	3760	3400
	301 L2	**64.8**	7.7	1150	0.99	15.0	71-80-90-100-112-132	6160	6160	16600	19100	4050	3400
	301 L3	**51.6**	9.7	1740	1.9	15.0	71-80-90-100-112-132	5710	5710	15500	17800	3750	3400
	301 L3	**63.2**	7.9	1780	1.6	15.0	71-80-90-100-112-132	6110	6110	16500	19000	4020	3400
	301 L3	**69.9**	7.2	1300	1.1	15.0	71-80-90-100-112-132	6310	6310	17000	19500	4150	3400
	301 L3	**77.5**	6.5	1830	1.4	15.0	71-80-90-100-112-132	6540	6540	17500	20100	4300	3400
	301 L3	**85.6**	5.8	1850	1.2	15.0	71-80-90-100-112-132	6760	6760	18100	20800	4440	3400
	301 L3	**105**	4.8	1910	1.0	15.0	71-80-90-100-112-132	7230	7230	19200	22100	4750	3400
	301 L3	**116**	4.3	1330	0.66	15.0	71-80-90-100-112-132	7470	7470	19800	22700	4910	3400
	301 L3	**131**	3.8	1980	0.87	15.0	71-80-90-100-112-132	7780	7780	20500	23600	5120	3400
	301 L3	**142**	3.5	2010	0.81	15.0	71-80-90-100-112-132	8000	8000	21000	24200	5260	3400
	301 L3	**177**	2.8	2090	0.68	15.0	71-80-90-100-112-132	8610	8610	22500	25800	5660	3400
	301 L3	**192**	2.6	1450	0.43	15.0	71-80-90-100-112-132	8850	8850	23000	26500	5820	3400
	301 L3	**221**	2.3	2000	0.52	15.0	71-80-90-100-112-132	9270	9270	24000	27600	6090	3400
	301 L3	**240**	2.1	1510	0.36	15.0	71-80-90-100-112-132	9520	9520	24600	28300	6260	3400
	301 L3	**299**	1.7	1570	0.30	15.0	71-80-90-100-112-132	10300	10300	26300	30200	6740	3400
	301 L3	**374**	1.3	1630	0.25	15.0	71-80-90-100-112-132	11000	11000	28100	32300	7260	3400
	301 L4	**330**	1.5	2310	0.41	12.0	71-80-90-100-112-132	10600	10600	27100	31100	6970	3400
	301 L4	**403**	1.2	1650	0.24	12.0	71-80-90-100-112-132	11300	11300	28800	33000	7450	3400
	301 L4	**447**	1.1	2420	0.32	12.0	71-80-90-100-112-132	11700	11700	29700	34000	7710	3400
	301 L4	**494**	1.0	2460	0.29	12.0	71-80-90-100-112-132	12000	12100	30600	34000	7970	3400
	301 L4	**558**	0.90	2460	0.26	12.0	71-80-90-100-112-132	12000	12500	31000	34000	8000	3400
	301 L4	**616**	0.81	2460	0.24	12.0	71-80-90-100-112-132	12000	12500	31000	34000	8000	3400
	301 L4	**755**	0.66	2460	0.19	12.0	71-80-90-100-112-132	12000	12500	31000	34000	8000	3400
	301 L4	**819**	0.61	2460	0.18	12.0	71-80-90-100-112-132	12000	12500	31000	34000	8000	3400
	301 L4	**942**	0.53	2460	0.15	12.0	71-80-90-100-112-132	12000	12500	31000	34000	8000	3400
	301 L4	**1022**	0.49	2460	0.14	12.0	71-80-90-100-112-132	12000	12500	31000	34000	8000	3400
	301 L4	**1108**	0.45	1720	0.09	12.0	71-80-90-100-112-132	12000	12500	31000	34000	8000	3400
	301 L4	**1275**	0.39	2460	0.11	12.0	71-80-90-100-112-132	12000	12500	31000	34000	8000	3400
	301 L4	**1383**	0.36	1720	0.07	12.0	71-80-90-100-112-132	12000	12500	31000	34000	8000	3400
	301 L4	**1591**	0.31	2000	0.07	12.0	71-80-90-100-112-132	12000	12500	31000	34000	8000	3400
	301 L4	**1725**	0.29	1720	0.06	12.0	71-80-90-100-112-132	12000	12500	31000	34000	8000	3400
	301 L4	**2153**	0.23	1720	0.05	12.0	71-80-90-100-112-132	12000	12500	31000	34000	8000	3400
	301 L4	**2692**	0.19	1720	0.04	12.0	71-80-90-100-112-132	12000	12500	31000	34000	8000	3400

B

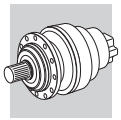

303 L

264

2970 Nm

n_1 min^{-1}		i	n_2 min^{-1}	M_{n2} Nm	P_{n1} kW	P_t kW	P (IEC)	Rn_2 [N] MC	MZ	HC/PC	HZ/PZ	FZ	$M_{2\,max}$ Nm
1500	**303 L1**	**3.60**	417	1380	40	11.0	132-160-180-200	5010	5780	10300	12300	3210	5200
	303 L1	**4.25**	353	1430	40	11.0	132-160-180-200	5290	6110	10800	13000	3400	5200
	303 L1	**5.33**	281	1490	40	11.0	132-160-180-200	5710	6590	11500	13900	3660	5200
	303 L1	**6.20**	242	1400	36	11.0	132-160-180-200	6000	6930	12100	14500	3850	5200
	303 L1	**7.50**	200	1220	26	11.0	132-160-180-200	6400	7390	12800	15400	4100	5200
	303 L1	**9.67**	155	750	12.6	11.0	132-160-180-200	6960	8040	13800	16600	4470	5200
	303 L2	**12.5**	120	1640	20.0	9.0	71-80-90-100-112-132-160	7590	8760	14900	17900	4870	5200
	303 L2	**15.3**	98	1710	18.6	9.0	71-80-90-100-112-132-160	8120	9380	15800	19100	5210	5200
	303 L2	**18.1**	83	2020	18.6	9.0	71-80-90-100-112-132-160	8580	9910	16600	20000	5510	5200
	303 L2	**20.8**	72	1820	14.6	9.0	71-80-90-100-112-132-160	8980	10400	17300	20900	5760	5200
	303 L2	**22.7**	66	2100	15.4	9.0	71-80-90-100-112-132-160	9260	10700	17800	21400	5940	5200
	303 L2	**24.5**	61	2150	14.6	9.0	71-80-90-100-112-132-160	9490	11000	18200	21900	6090	5200
	303 L2	**26.4**	57	1820	11.5	9.0	71-80-90-100-112-132-160	9740	11200	18600	22400	6250	5200
	303 L2	**30.8**	49	2140	11.6	9.0	71-80-90-100-112-132-160	10200	11800	19500	23500	6570	5200
	303 L2	**35.8**	42	1820	8.5	9.0	71-80-90-100-112-132-160	10800	12400	20400	24600	6910	5200
	303 L2	**38.4**	39	2150	9.3	9.0	71-80-90-100-112-132-160	11000	12700	20900	25100	7070	5200
	303 L2	**44.6**	34	1820	6.8	9.0	71-80-90-100-112-132-160	11600	13400	21800	26300	7440	5200
	303 L2	**55.8**	26.9	1820	5.4	9.0	71-80-90-100-112-132-160	12500	14400	23300	28100	8010	5200
	303 L3	**53.4**	28.1	2170	7.0	7.5	71-80-90-100-112-132-160	12300	14200	23000	27700	7900	5200
	303 L3	**63.1**	23.8	2510	6.8	7.5	71-80-90-100-112-132-160	13000	15000	24200	29100	8340	5200
	303 L3	**72.3**	20.8	2230	5.3	7.5	71-80-90-100-112-132-160	13600	15700	25200	30300	8730	5200
	303 L3	**77.2**	19.4	2520	5.6	7.5	71-80-90-100-112-132-160	13900	16100	25700	30900	8930	5200
	303 L3	**90.2**	16.6	2250	4.3	7.5	71-80-90-100-112-132-160	14700	16900	26900	32400	9400	5200
	303 L3	**105**	14.4	2580	4.2	7.5	71-80-90-100-112-132-160	15400	17800	28200	33900	9880	5200
	303 L3	**113**	13.3	1820	2.8	7.5	71-80-90-100-112-132-160	15800	18200	28800	34700	10100	5200
	303 L3	**124**	12.1	1820	2.5	7.5	71-80-90-100-112-132-160	16300	18800	29700	35700	10500	5200
	303 L3	**141**	10.6	2610	3.2	7.5	71-80-90-100-112-132-160	17000	19700	30800	37100	10900	5200
	303 L3	**152**	9.8	1820	2.1	7.5	71-80-90-100-112-132-160	17500	20200	31500	37900	11200	5200
	303 L3	**164**	9.2	2200	2.3	7.5	71-80-90-100-112-132-160	17900	20600	32200	38800	11500	5200
	303 L3	**178**	8.5	2210	2.1	7.5	71-80-90-100-112-132-160	18400	21200	33000	39700	11800	5200
	303 L3	**190**	7.9	1830	1.7	7.5	71-80-90-100-112-132-160	18800	21700	33700	40600	12100	5200
	303 L3	**220**	6.8	2250	1.8	7.5	71-80-90-100-112-132-160	19700	22800	35200	42400	12700	5200
	303 L3	**258**	5.8	1840	1.2	7.5	71-80-90-100-112-132-160	20800	24000	36900	44400	13300	5200
	303 L3	**276**	5.4	2230	1.4	7.5	71-80-90-100-112-132-160	21300	24600	37700	45400	13700	5200
	303 L3	**321**	4.7	1860	1.00	7.5	71-80-90-100-112-132-160	22400	25800	39400	47500	14400	5200
	303 L3	**389**	3.9	1690	0.75	7.5	71-80-90-100-112-132-160	23900	27500	41800	50300	15300	5200
	303 L3	**402**	3.7	1940	0.83	7.5	71-80-90-100-112-132-160	24100	27800	42200	50700	15500	5200
	303 L4	**413**	3.6	2360	1.0	6.0	71-80-90-100-112-132-160	24300	28100	42500	51200	15600	5200
	303 L4	**446**	3.4	2810	1.1	6.0	71-80-90-100-112-132-160	25000	28800	43500	52400	16000	5200
	303 L4	**492**	3.0	2690	0.97	6.0	71-80-90-100-112-132-160	25800	29800	44800	53900	16600	5200
	303 L4	**556**	2.7	2810	0.90	6.0	71-80-90-100-112-132-160	26900	31000	46500	55900	17200	5200
	303 L4	**649**	2.3	2320	0.63	6.0	71-80-90-100-112-132-160	28300	32700	48700	58600	18200	5200
	303 L4	**718**	2.1	2150	0.53	6.0	71-80-90-100-112-132-160	29300	33800	50200	60400	18800	5200
	303 L4	**816**	1.8	2720	0.59	6.0	71-80-90-100-112-132-160	30500	35300	52200	62800	19600	5200
	303 L4	**896**	1.7	2230	0.44	6.0	71-80-90-100-112-132-160	31500	36400	53700	64600	20200	5200
	303 L4	**1018**	1.5	2740	0.48	6.0	71-80-90-100-112-132-160	32900	38000	55800	67100	21100	5200
	303 L4	**1098**	1.4	2310	0.37	6.0	71-80-90-100-112-132-160	33700	38900	57000	68600	21600	5200
	303 L4	**1278**	1.2	2790	0.39	6.0	71-80-90-100-112-132-160	35500	40900	59700	71800	22800	5200
	303 L4	**1370**	1.1	2400	0.31	6.0	71-80-90-100-112-132-160	36000	41900	60900	73300	23300	5200
	303 L4	**1586**	0.95	2250	0.25	6.0	71-80-90-100-112-132-160	36000	42000	63700	74000	24000	5200
	303 L4	**1854**	0.81	2440	0.23	6.0	71-80-90-100-112-132-160	36000	42000	64000	74000	24000	5200
	303 L4	**1991**	0.75	2850	0.25	6.0	71-80-90-100-112-132-160	36000	42000	64000	74000	24000	5200
	303 L4	**2243**	0.67	2000	0.16	6.0	71-80-90-100-112-132-160	36000	42000	64000	74000	24000	5200
	303 L4	**2799**	0.54	2000	0.13	6.0	71-80-90-100-112-132-160	36000	42000	64000	74000	24000	5200
1000	**303 L1**	**3.60**	278	1560	40	13.2	132-160-180-200	5730	6620	11600	13900	3680	5200
	303 L1	**4.25**	235	1620	40	13.2	132-160-180-200	6060	7000	12200	14600	3890	5200
	303 L1	**5.33**	188	1680	34	13.2	132-160-180-200	6540	7550	13000	15700	4190	5200
	303 L1	**6.20**	161	1580	27	13.2	132-160-180-200	6870	7930	13600	16400	4410	5200
	303 L1	**7.50**	133	1380	19.8	13.2	132-160-180-200	7320	8450	14400	17400	4700	5200
	303 L1	**9.67**	103	850	9.5	13.2	132-160-180-200	7970	9200	15600	18700	5110	5200

B

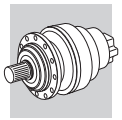

303 L

264

2970 Nm

n_1 min^{-1}		i	n_2 min^{-1}	M_{n2} Nm	P_{n1} kW	P_t kW	P (IEC)	Rn_2 [N] MC	MZ	HC/PC	HZ/PZ	FZ	$M_{2\,max}$ Nm
1000	**303 L2**	**12.5**	80	1850	16.4	10.8	71-80-90-100-112-132-160	8690	10000	16800	20300	5570	5200
	303 L2	**15.3**	65	1940	14.0	10.8	71-80-90-100-112-132-160	9300	10700	17900	21500	5960	5200
	303 L2	**18.1**	55	2280	14.0	10.8	71-80-90-100-112-132-160	9830	11300	18800	22600	6300	5200
	303 L2	**20.8**	48	2030	10.9	10.8	71-80-90-100-112-132-160	10300	11900	19600	23600	6600	5200
	303 L2	**22.7**	44	2140	10.5	10.8	71-80-90-100-112-132-160	10600	12200	20100	24200	6800	5200
	303 L2	**24.5**	41	2320	10.5	10.8	71-80-90-100-112-132-160	10900	12500	20600	24800	6970	5200
	303 L2	**26.4**	38	1820	7.7	10.8	71-80-90-100-112-132-160	11100	12900	21100	25300	7150	5200
	303 L2	**30.8**	33	2160	7.8	10.8	71-80-90-100-112-132-160	11700	13500	22000	26500	7520	5200
	303 L2	**35.8**	28.0	1820	5.7	10.8	71-80-90-100-112-132-160	12300	14200	23100	27700	7910	5200
	303 L2	**38.4**	26.0	2160	6.3	10.8	71-80-90-100-112-132-160	12600	14600	23600	28300	8100	5200
	303 L2	**44.6**	22.4	1820	4.5	10.8	71-80-90-100-112-132-160	13300	15300	24600	29600	8510	5200
	303 L2	**55.8**	17.9	1820	3.6	10.8	71-80-90-100-112-132-160	14300	16500	26300	31700	9170	5200
	303 L3	**53.4**	18.7	2230	4.8	9.0	71-80-90-100-112-132-160	14100	16300	26000	31300	9040	5200
	303 L3	**63.1**	15.9	2570	4.7	9.0	71-80-90-100-112-132-160	14900	17200	27300	32900	9550	5200
	303 L3	**72.3**	13.8	2270	3.6	9.0	71-80-90-100-112-132-160	15600	18000	28500	34300	10000	5200
	303 L3	**77.2**	12.9	2600	3.9	9.0	71-80-90-100-112-132-160	15900	18400	29000	34900	10200	5200
	303 L3	**90.2**	11.1	2300	2.9	9.0	71-80-90-100-112-132-160	16800	19400	30400	36600	10800	5200
	303 L3	**105**	9.6	2660	2.9	9.0	71-80-90-100-112-132-160	17600	20300	31800	38300	11300	5200
	303 L3	**113**	8.9	1820	1.9	9.0	71-80-90-100-112-132-160	18100	20900	32500	39100	11600	5200
	303 L3	**124**	8.0	1830	1.7	9.0	71-80-90-100-112-132-160	18700	21600	33500	40300	12000	5200
	303 L3	**141**	7.1	2630	2.1	9.0	71-80-90-100-112-132-160	19500	22500	34800	41900	12500	5200
	303 L3	**152**	6.6	1830	1.4	9.0	71-80-90-100-112-132-160	20000	23100	35600	42900	12800	5200
	303 L3	**164**	6.1	2220	1.6	9.0	71-80-90-100-112-132-160	20500	23600	36400	43800	13100	5200
	303 L3	**178**	5.6	2220	1.4	9.0	71-80-90-100-112-132-160	21000	24300	37300	44900	13500	5200
	303 L3	**190**	5.3	1840	1.1	9.0	71-80-90-100-112-132-160	21500	24800	38100	45800	13800	5200
	303 L3	**220**	4.5	2240	1.2	9.0	71-80-90-100-112-132-160	22600	26100	39800	47900	14500	5200
	303 L3	**258**	3.9	1920	0.86	9.0	71-80-90-100-112-132-160	23800	27500	41700	50200	15300	5200
	303 L3	**276**	3.6	2330	0.97	9.0	71-80-90-100-112-132-160	24400	28100	42600	51200	15600	5200
	303 L3	**321**	3.1	2000	0.71	9.0	71-80-90-100-112-132-160	25600	29600	44600	53600	16400	5200
	303 L3	**389**	2.6	1750	0.52	9.0	71-80-90-100-112-132-160	27300	31500	47200	56800	17500	5200
	303 L3	**402**	2.5	2080	0.59	9.0	71-80-90-100-112-132-160	27600	31900	47600	57300	17700	5200
	303 L4	**413**	2.4	2530	0.72	7.2	71-80-90-100-112-132-160	27900	32200	48000	57800	17900	5200
	303 L4	**446**	2.2	2830	0.75	7.2	71-80-90-100-112-132-160	28600	33000	49100	59100	18300	5200
	303 L4	**492**	2.0	2720	0.65	7.2	71-80-90-100-112-132-160	29500	34100	50600	60900	19000	5200
	303 L4	**556**	1.8	2870	0.61	7.2	71-80-90-100-112-132-160	30800	35500	52500	63200	19700	5200
	303 L4	**649**	1.5	2360	0.43	7.2	71-80-90-100-112-132-160	32400	37400	55000	66200	20800	5200
	303 L4	**718**	1.4	2300	0.38	7.2	71-80-90-100-112-132-160	33500	38700	56700	68200	21500	5200
	303 L4	**816**	1.2	2750	0.40	7.2	71-80-90-100-112-132-160	35000	40400	58900	70900	22400	5200
	303 L4	**896**	1.1	2390	0.32	7.2	71-80-90-100-112-132-160	36000	41600	60600	72900	23100	5200
	303 L4	**1018**	0.98	2770	0.32	7.2	71-80-90-100-112-132-160	36000	42000	63000	74000	24000	5200
	303 L4	**1098**	0.91	2440	0.26	7.2	71-80-90-100-112-132-160	36000	42000	64000	74000	24000	5200
	303 L4	**1278**	0.78	2850	0.26	7.2	71-80-90-100-112-132-160	36000	42000	64000	74000	24000	5200
	303 L4	**1370**	0.73	2440	0.21	7.2	71-80-90-100-112-132-160	36000	42000	64000	74000	24000	5200
	303 L4	**1586**	0.63	2250	0.17	7.2	71-80-90-100-112-132-160	36000	42000	64000	74000	24000	5200
	303 L4	**1854**	0.54	2440	0.16	7.2	71-80-90-100-112-132-160	36000	42000	64000	74000	24000	5200
	303 L4	**1991**	0.50	2850	0.17	7.2	71-80-90-100-112-132-160	36000	42000	64000	74000	24000	5200
	303 L4	**2243**	0.45	2000	0.11	7.2	71-80-90-100-112-132-160	36000	42000	64000	74000	24000	5200
	303 L4	**2799**	0.36	2000	0.08	7.2	71-80-90-100-112-132-160	36000	42000	64000	74000	24000	5200
500	**303 L1**	**3.60**	139	1920	29	22	132-160-180-200	7220	8340	14300	17200	4630	5200
	303 L1	**4.25**	118	1990	25	22	132-160-180-200	7630	8810	15000	18000	4900	5200
	303 L1	**5.33**	94	2040	21	22	132-160-180-200	8240	9510	16000	19300	5280	5200
	303 L1	**6.20**	81	1820	15.8	22	132-160-180-200	8660	10000	16800	20200	5560	5200
	303 L1	**7.50**	67	1590	11.4	22	132-160-180-200	9230	10700	17800	21400	5920	5200
	303 L1	**9.67**	52	860	4.8	22	132-160-180-200	10000	11600	19200	23100	6440	5200
	303 L2	**12.5**	40	2150	9.6	18.0	71-80-90-100-112-132-160	10900	12600	20700	24900	7020	5200
	303 L2	**15.3**	33	2150	7.8	18.0	71-80-90-100-112-132-160	11700	13500	22000	26500	7510	5200
	303 L2	**18.1**	27.6	2460	7.5	18.0	71-80-90-100-112-132-160	12400	14300	23100	27800	7940	5200
	303 L2	**20.8**	24.1	2110	5.7	18.0	71-80-90-100-112-132-160	13000	15000	24100	29000	8310	5200
	303 L2	**22.7**	22.0	2170	5.3	18.0	71-80-90-100-112-132-160	13400	15400	24800	29800	8570	5200
	303 L2	**24.5**	20.4	2460	5.6	18.0	71-80-90-100-112-132-160	13700	15800	25300	30500	8780	5200
	303 L2	**26.4**	18.9	1820	3.8	18.0	71-80-90-100-112-132-160	14000	16200	25900	31200	9010	5200

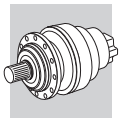

303 L — 264 — 2970 Nm

n_1 min^{-1}		i	n_2 min^{-1}	M_{n2} Nm	P_{n1} kW	P_t kW	P (IEC)	Rn_2 [N] MC	MZ	HC/PC	HZ/PZ	FZ	$M_{2\,max}$ Nm
500	**303 L2**	**30.8**	16.3	2180	3.9	18.0	71-80-90-100-112-132-160	14800	17100	27100	32600	9480	5200
	303 L2	**35.8**	14.0	1820	2.8	18.0	71-80-90-100-112-132-160	15500	17900	28400	34200	9960	5200
	303 L2	**38.4**	13.0	2190	3.2	18.0	71-80-90-100-112-132-160	15900	18400	29000	34900	10200	5200
	303 L2	**44.6**	11.2	1820	2.3	18.0	71-80-90-100-112-132-160	16700	19300	30300	36500	10700	5200
	303 L2	**55.8**	9.0	1820	1.8	18.0	71-80-90-100-112-132-160	18000	20800	32400	39000	11600	5200
	303 L3	**53.4**	9.4	2310	2.5	15.0	71-80-90-100-112-132-160	17800	20500	32000	38500	11400	5200
	303 L3	**63.1**	7.9	2700	2.5	15.0	71-80-90-100-112-132-160	18800	21700	33600	40500	12000	5200
	303 L3	**72.3**	6.9	2310	1.8	15.0	71-80-90-100-112-132-160	19600	22700	35100	42200	12600	5200
	303 L3	**77.2**	6.5	2750	2.0	15.0	71-80-90-100-112-132-160	20100	23200	35800	43000	12900	5200
	303 L3	**90.2**	5.5	2310	1.5	15.0	71-80-90-100-112-132-160	21100	24400	37500	45100	13600	5200
	303 L3	**105**	4.8	2810	1.5	15.0	71-80-90-100-112-132-160	22200	25600	39200	47100	14200	5200
	303 L3	**113**	4.4	1880	0.96	15.0	71-80-90-100-112-132-160	22800	26300	40100	48200	14600	5200
	303 L3	**124**	4.0	1910	0.88	15.0	71-80-90-100-112-132-160	23500	27200	41300	49600	15100	5200
	303 L3	**141**	3.5	2670	1.1	15.0	71-80-90-100-112-132-160	24600	28400	42900	51600	15800	5200
	303 L3	**152**	3.3	1980	0.75	15.0	71-80-90-100-112-132-160	25200	29100	43900	52800	16200	5200
	303 L3	**164**	3.1	2430	0.85	15.0	71-80-90-100-112-132-160	25800	29800	44800	53900	16500	5200
	303 L3	**178**	2.8	2470	0.80	15.0	71-80-90-100-112-132-160	26500	30600	45900	55200	17000	5200
	303 L3	**190**	2.6	2060	0.62	15.0	71-80-90-100-112-132-160	27100	31300	46900	56400	17400	5200
	303 L3	**220**	2.3	2210	0.57	15.0	71-80-90-100-112-132-160	28500	32900	49000	58900	18300	5200
	303 L3	**258**	1.9	2170	0.48	15.0	71-80-90-100-112-132-160	30000	34600	51300	61700	19200	5200
	303 L3	**276**	1.8	2580	0.54	15.0	71-80-90-100-112-132-160	30700	35400	52400	63100	19700	5200
	303 L3	**321**	1.6	2260	0.40	15.0	71-80-90-100-112-132-160	32300	37300	54900	66000	20700	5200
	303 L3	**389**	1.3	1930	0.28	15.0	71-80-90-100-112-132-160	34400	39700	58100	69900	22100	5200
	303 L3	**402**	1.2	2350	0.34	15.0	71-80-90-100-112-132-160	34800	40200	58600	70600	22300	5200
	303 L4	**413**	1.2	2780	0.40	12.0	71-80-90-100-112-132-160	35100	40500	59100	71200	22500	5200
	303 L4	**446**	1.1	2950	0.39	12.0	71-80-90-100-112-132-160	36000	41600	60500	72800	23100	5200
	303 L4	**492**	1.0	2770	0.33	12.0	71-80-90-100-112-132-160	36000	42000	62300	74000	23900	5200
	303 L4	**556**	0.90	2970	0.32	12.0	71-80-90-100-112-132-160	36000	42000	64000	74000	24000	5200
	303 L4	**649**	0.77	2410	0.22	12.0	71-80-90-100-112-132-160	36000	42000	64000	74000	24000	5200
	303 L4	**718**	0.70	2440	0.20	12.0	71-80-90-100-112-132-160	36000	42000	64000	74000	24000	5200
	303 L4	**816**	0.61	2770	0.20	12.0	71-80-90-100-112-132-160	36000	42000	64000	74000	24000	5200
	303 L4	**896**	0.56	2440	0.16	12.0	71-80-90-100-112-132-160	36000	42000	64000	74000	24000	5200
	303 L4	**1018**	0.49	2770	0.16	12.0	71-80-90-100-112-132-160	36000	42000	64000	74000	24000	5200
	303 L4	**1098**	0.46	2440	0.13	12.0	71-80-90-100-112-132-160	36000	42000	64000	74000	24000	5200
	303 L4	**1278**	0.39	2850	0.13	12.0	71-80-90-100-112-132-160	36000	42000	64000	74000	24000	5200
	303 L4	**1370**	0.36	2440	0.11	12.0	71-80-90-100-112-132-160	36000	42000	64000	74000	24000	5200
	303 L4	**1586**	0.32	2250	0.08	12.0	71-80-90-100-112-132-160	36000	42000	64000	74000	24000	5200
	303 L4	**1854**	0.27	2440	0.08	12.0	71-80-90-100-112-132-160	36000	42000	64000	74000	24000	5200
	303 L4	**1991**	0.25	2850	0.08	12.0	71-80-90-100-112-132-160	36000	42000	64000	74000	24000	5200
	303 L4	**2243**	0.22	2000	0.05	12.0	71-80-90-100-112-132-160	36000	42000	64000	74000	24000	5200
	303 L4	**2799**	0.18	2000	0.04	12.0	71-80-90-100-112-132-160	36000	42000	64000	74000	24000	5200

304 L — 276 — 3960 Nm

n_1 min^{-1}		i	n_2 min^{-1}	M_{n2} Nm	P_{n1} kW	P_t kW	P (IEC)	Rn_2 [N] MC	MZ	HC/PC	HZ/PZ	FZ	$M_{2\,max}$ Nm
1500	**304 L1**	**3.60**	417	1840	50	12.0	132-160-180-200	5010	5780	10300	12300	3210	7300
	304 L1	**4.25**	353	1900	50	12.0	132-160-180-200	5290	6110	10800	13000	3400	7300
	304 L1	**5.33**	281	1990	50	12.0	132-160-180-200	5710	6590	11500	13900	3660	7300
	304 L1	**6.57**	228	1870	46	12.0	132-160-180-200	6120	7070	12300	14800	3930	7300
	304 L2	**12.5**	120	2680	30	9.0	71-80-90-100-112-132-160	7590	8760	14900	17900	4870	7300
	304 L2	**15.3**	98	2840	30	9.0	71-80-90-100-112-132-160	8120	9380	15800	19100	5210	7300
	304 L2	**18.1**	83	2940	27	9.0	71-80-90-100-112-132-160	8580	9910	16600	20000	5510	7300
	304 L2	**20.8**	72	2960	24	9.0	71-80-90-100-112-132-160	8980	10400	17300	20900	5760	7300
	304 L2	**22.7**	66	2790	21	9.0	71-80-90-100-112-132-160	9260	10700	17800	21400	5940	7300
	304 L2	**24.5**	61	3230	22	9.0	71-80-90-100-112-132-160	9490	11000	18200	21900	6090	7300
	304 L2	**30.8**	49	2850	15.5	9.0	71-80-90-100-112-132-160	10200	11800	19500	23500	6570	7300
	304 L2	**38.4**	39	2850	12.4	9.0	71-80-90-100-112-132-160	11000	12700	20900	25100	7070	7300
	304 L2	**47.3**	32	2390	8.4	9.0	71-80-90-100-112-132-160	11800	13600	22200	26700	7580	7300

B

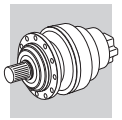

304 L

276

3960 Nm

n_1 min^{-1}		i	n_2 min^{-1}	M_{n2} Nm	P_{n1} kW	P_t kW	P (IEC) -	Rn_2 [N] MC	MZ	HC/PC	HZ/PZ	FZ	$M_{2\,max}$ Nm
1500	**304 L2**	**59.1**	25.4	2390	6.7	9.0	71-80-90-100-112-132-160	12700	14700	23700	28600	8170	7300
	304 L3	**43.6**	34	3190	12.6	7.5	71-80-90-100-112-132-160	11500	13300	21700	26100	7380	7300
	304 L3	**53.4**	28.1	3230	10.4	7.5	71-80-90-100-112-132-160	12300	14200	23000	27700	7900	7300
	304 L3	**63.1**	23.8	3480	9.5	7.5	71-80-90-100-112-132-160	13000	15000	24200	29100	8340	7300
	304 L3	**72.3**	20.8	3290	7.8	7.5	71-80-90-100-112-132-160	13600	15700	25200	30300	8730	7300
	304 L3	**77.2**	19.4	3490	7.8	7.5	71-80-90-100-112-132-160	13900	16100	25700	30900	8930	7300
	304 L3	**90.2**	16.6	3320	6.3	7.5	71-80-90-100-112-132-160	14700	16900	26900	32400	9400	7300
	304 L3	**105**	14.4	3520	5.8	7.5	71-80-90-100-112-132-160	15400	17800	28200	33900	9880	7300
	304 L3	**111**	13.6	3380	5.3	7.5	71-80-90-100-112-132-160	15700	18100	28600	34500	10100	7300
	304 L3	**130**	11.5	3530	4.7	7.5	71-80-90-100-112-132-160	16600	19100	30100	36200	10600	7300
	304 L3	**141**	10.6	3540	4.3	7.5	71-80-90-100-112-132-160	17000	19700	30800	37100	10900	7300
	304 L3	**150**	10.0	3440	4.0	7.5	71-80-90-100-112-132-160	17300	20000	31400	37700	11100	7300
	304 L3	**165**	9.1	2390	2.5	7.5	71-80-90-100-112-132-160	17900	20700	32300	38800	11500	7300
	304 L3	**178**	8.5	2850	2.8	7.5	71-80-90-100-112-132-160	18400	21200	33000	39700	11800	7300
	304 L3	**202**	7.4	2390	2.0	7.5	71-80-90-100-112-132-160	19200	22100	34300	41300	12300	7300
	304 L3	**220**	6.8	3610	2.8	7.5	71-80-90-100-112-132-160	19700	22800	35200	42400	12700	7300
	304 L3	**273**	5.5	2390	1.5	7.5	71-80-90-100-112-132-160	21200	24500	37600	45200	13600	7300
	304 L3	**341**	4.4	2420	1.2	7.5	71-80-90-100-112-132-160	22800	26400	40200	48300	14700	7300
	304 L3	**426**	3.5	2470	1.0	7.5	71-80-90-100-112-132-160	24600	28400	42900	51600	15800	7300
	304 L4	**413**	3.6	3000	1.3	6.0	71-80-90-100-112-132-160	24300	28100	42500	51200	15600	7300
	304 L4	**446**	3.4	3720	1.5	6.0	71-80-90-100-112-132-160	25000	28800	43500	52400	16000	7300
	304 L4	**492**	3.0	3730	1.3	6.0	71-80-90-100-112-132-160	25800	29800	44800	53900	16600	7300
	304 L4	**556**	2.7	3740	1.2	6.0	71-80-90-100-112-132-160	26900	31000	46500	55900	17200	7300
	304 L4	**649**	2.3	3540	0.97	6.0	71-80-90-100-112-132-160	28300	32700	48700	58600	18200	7300
	304 L4	**702**	2.1	2630	0.66	6.0	71-80-90-100-112-132-160	29000	33500	49900	60000	18600	7300
	304 L4	**816**	1.8	3820	0.83	6.0	71-80-90-100-112-132-160	30500	35300	52200	62800	19600	7300
	304 L4	**1018**	1.5	3870	0.67	6.0	71-80-90-100-112-132-160	32900	38000	55800	67100	21100	7300
	304 L4	**1164**	1.3	2870	0.44	6.0	71-80-90-100-112-132-160	34400	39700	58000	69800	22100	7300
	304 L4	**1271**	1.2	3920	0.55	6.0	71-80-90-100-112-132-160	35400	40900	59600	71700	22700	7300
	304 L4	**1344**	1.1	3690	0.49	6.0	71-80-90-100-112-132-160	36000	41600	60600	72900	23100	7300
	304 L4	**1586**	0.95	3960	0.44	6.0	71-80-90-100-112-132-160	36000	42000	63700	74000	24000	7300
	304 L4	**1815**	0.83	3000	0.29	6.0	71-80-90-100-112-132-160	36000	42000	64000	74000	24000	7300
	304 L4	**1991**	0.75	3740	0.33	6.0	71-80-90-100-112-132-160	36000	42000	64000	74000	24000	7300
	304 L4	**2269**	0.66	3000	0.23	6.0	71-80-90-100-112-132-160	36000	42000	64000	74000	24000	7300
	304 L4	**2453**	0.61	3000	0.22	6.0	71-80-90-100-112-132-160	36000	42000	64000	74000	24000	7300
1000	**304 L1**	**3.60**	278	2080	50	14.4	132-160-180-200	5730	6620	11600	13900	3680	7300
	304 L1	**4.25**	235	2150	50	14.4	132-160-180-200	6060	7000	12200	14600	3890	7300
	304 L1	**5.33**	188	2240	45	14.4	132-160-180-200	6540	7550	13000	15700	4190	7300
	304 L1	**6.57**	152	2110	35	14.4	132-160-180-200	7010	8090	13900	16700	4500	7300
	304 L2	**12.5**	80	2920	26	10.8	71-80-90-100-112-132-160	8690	10000	16800	20300	5570	7300
	304 L2	**15.3**	65	3010	22	10.8	71-80-90-100-112-132-160	9300	10700	17900	21500	5960	7300
	304 L2	**18.1**	55	3330	20	10.8	71-80-90-100-112-132-160	9830	11300	18800	22600	6300	7300
	304 L2	**20.8**	48	3130	16.8	10.8	71-80-90-100-112-132-160	10300	11900	19600	23600	6600	7300
	304 L2	**22.7**	44	2850	13.9	10.8	71-80-90-100-112-132-160	10600	12200	20100	24200	6800	7300
	304 L2	**24.5**	41	3440	15.6	10.8	71-80-90-100-112-132-160	10900	12500	20600	24800	6970	7300
	304 L2	**30.8**	33	2850	10.3	10.8	71-80-90-100-112-132-160	11700	13500	22000	26500	7520	7300
	304 L2	**38.4**	26.0	2850	8.3	10.8	71-80-90-100-112-132-160	12600	14600	23600	28300	8100	7300
	304 L2	**47.3**	21.1	2390	5.6	10.8	71-80-90-100-112-132-160	13500	15600	25100	30200	8680	7300
	304 L2	**59.1**	16.9	2390	4.5	10.8	71-80-90-100-112-132-160	14600	16800	26800	32300	9350	7300
	304 L3	**43.6**	22.9	3270	8.6	9.0	71-80-90-100-112-132-160	13200	15200	24500	29400	8450	7300
	304 L3	**53.4**	18.7	3310	7.1	9.0	71-80-90-100-112-132-160	14100	16300	26000	31300	9040	7300
	304 L3	**63.1**	15.9	3510	6.4	9.0	71-80-90-100-112-132-160	14900	17200	27300	32900	9550	7300
	304 L3	**72.3**	13.8	3370	5.4	9.0	71-80-90-100-112-132-160	15600	18000	28500	34300	10000	7300
	304 L3	**77.2**	12.9	3520	5.2	9.0	71-80-90-100-112-132-160	15900	18400	29000	34900	10200	7300
	304 L3	**90.2**	11.1	3420	4.3	9.0	71-80-90-100-112-132-160	16800	19400	30400	36600	10800	7300
	304 L3	**105**	9.6	3550	3.9	9.0	71-80-90-100-112-132-160	17600	20300	31800	38300	11300	7300
	304 L3	**111**	9.0	3450	3.6	9.0	71-80-90-100-112-132-160	18000	20700	32300	38900	11500	7300
	304 L3	**130**	7.7	3600	3.2	9.0	71-80-90-100-112-132-160	19000	21900	34000	40900	12200	7300
	304 L3	**141**	7.1	3610	2.9	9.0	71-80-90-100-112-132-160	19500	22500	34800	41900	12500	7300
	304 L3	**150**	6.7	3470	2.7	9.0	71-80-90-100-112-132-160	19900	22900	35400	42600	12700	7300

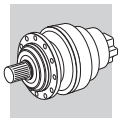

304 L

276

3960 Nm

n_1 min^{-1}		i	n_2 min^{-1}	M_{n2} Nm	P_{n1} kW	P_t kW	P (IEC)	Rn_2 [N] MC	MZ	HC/PC	HZ/PZ	FZ	$M_{2\,max}$ Nm
1000	**304 L3**	**165**	6.1	2390	1.7	9.0	71-80-90-100-112-132-160	20500	23700	36500	43900	13200	7300
	304 L3	**178**	5.6	2850	1.8	9.0	71-80-90-100-112-132-160	21000	24300	37300	44900	13500	7300
	304 L3	**202**	5.0	2390	1.4	9.0	71-80-90-100-112-132-160	21900	25300	38700	46600	14100	7300
	304 L3	**220**	4.5	3670	1.9	9.0	71-80-90-100-112-132-160	22600	26100	39800	47900	14500	7300
	304 L3	**273**	3.7	2460	1.0	9.0	71-80-90-100-112-132-160	24300	28000	42400	51000	15600	7300
	304 L3	**341**	2.9	2520	0.85	9.0	71-80-90-100-112-132-160	26100	30200	45400	54600	16800	7300
	304 L3	**426**	2.3	2590	0.70	9.0	71-80-90-100-112-132-160	28100	32500	48500	58300	18100	7300
	304 L4	**413**	2.4	3210	0.92	7.2	71-80-90-100-112-132-160	27900	32200	48000	57800	17900	7300
	304 L4	**446**	2.2	3770	1.0	7.2	71-80-90-100-112-132-160	28600	33000	49100	59100	18300	7300
	304 L4	**492**	2.0	3800	0.91	7.2	71-80-90-100-112-132-160	29500	34100	50600	60900	19000	7300
	304 L4	**556**	1.8	3820	0.81	7.2	71-80-90-100-112-132-160	30800	35500	52500	63200	19700	7300
	304 L4	**649**	1.5	3620	0.66	7.2	71-80-90-100-112-132-160	32400	37400	55000	66200	20800	7300
	304 L4	**702**	1.4	2820	0.48	7.2	71-80-90-100-112-132-160	33200	38400	56300	67800	21300	7300
	304 L4	**816**	1.2	3910	0.57	7.2	71-80-90-100-112-132-160	35000	40400	58900	70900	22400	7300
	304 L4	**1018**	0.98	3960	0.46	7.2	71-80-90-100-112-132-160	36000	42000	63000	74000	24000	7300
	304 L4	**1164**	0.86	3000	0.30	7.2	71-80-90-100-112-132-160	36000	42000	64000	74000	24000	7300
	304 L4	**1271**	0.79	3960	0.37	7.2	71-80-90-100-112-132-160	36000	42000	64000	74000	24000	7300
	304 L4	**1344**	0.74	3710	0.33	7.2	71-80-90-100-112-132-160	36000	42000	64000	74000	24000	7300
	304 L4	**1586**	0.63	3960	0.30	7.2	71-80-90-100-112-132-160	36000	42000	64000	74000	24000	7300
	304 L4	**1815**	0.55	3000	0.20	7.2	71-80-90-100-112-132-160	36000	42000	64000	74000	24000	7300
	304 L4	**1991**	0.50	3740	0.22	7.2	71-80-90-100-112-132-160	36000	42000	64000	74000	24000	7300
	304 L4	**2269**	0.44	3000	0.16	7.2	71-80-90-100-112-132-160	36000	42000	64000	74000	24000	7300
	304 L4	**2453**	0.41	3000	0.14	7.2	71-80-90-100-112-132-160	36000	42000	64000	74000	24000	7300
500	**304 L1**	**3.60**	139	2560	38	24	132-160-180-200	7220	8340	14300	17200	4630	7300
	304 L1	**4.25**	118	2650	34	24	132-160-180-200	7630	8810	15000	18000	4900	7300
	304 L1	**5.33**	94	2720	28	24	132-160-180-200	8240	9510	16000	19300	5280	7300
	304 L1	**6.57**	76	2390	19.6	24	132-160-180-200	8830	10200	17100	20500	5660	7300
	304 L2	**12.5**	40	3160	14.0	18.0	71-80-90-100-112-132-160	10900	12600	20700	24900	7020	7300
	304 L2	**15.3**	33	3200	11.6	18.0	71-80-90-100-112-132-160	11700	13500	22000	26500	7510	7300
	304 L2	**18.1**	27.6	3470	10.7	18.0	71-80-90-100-112-132-160	12400	14300	23100	27800	7940	7300
	304 L2	**20.8**	24.1	3260	8.7	18.0	71-80-90-100-112-132-160	13000	15000	24100	29000	8310	7300
	304 L2	**22.7**	22.0	2850	7.0	18.0	71-80-90-100-112-132-160	13400	15400	24800	29800	8570	7300
	304 L2	**24.5**	20.4	3490	7.9	18.0	71-80-90-100-112-132-160	13700	15800	25300	30500	8780	7300
	304 L2	**30.8**	16.3	2850	5.2	18.0	71-80-90-100-112-132-160	14800	17100	27100	32600	9480	7300
	304 L2	**38.4**	13.0	2850	4.1	18.0	71-80-90-100-112-132-160	15900	18400	29000	34900	10200	7300
	304 L2	**47.3**	10.6	2390	2.8	18.0	71-80-90-100-112-132-160	17000	19700	30900	37100	10900	7300
	304 L2	**59.1**	8.5	2390	2.2	18.0	71-80-90-100-112-132-160	18400	21200	33000	39700	11800	7300
	304 L3	**43.6**	11.5	3410	4.5	15.0	71-80-90-100-112-132-160	16600	19200	30100	36200	10600	7300
	304 L3	**53.4**	9.4	3450	3.7	15.0	71-80-90-100-112-132-160	17800	20500	32000	38500	11400	7300
	304 L3	**63.1**	7.9	3590	3.3	15.0	71-80-90-100-112-132-160	18800	21700	33600	40500	12000	7300
	304 L3	**72.3**	6.9	3470	2.8	15.0	71-80-90-100-112-132-160	19600	22700	35100	42200	12600	7300
	304 L3	**77.2**	6.5	3630	2.7	15.0	71-80-90-100-112-132-160	20100	23200	35800	43000	12900	7300
	304 L3	**90.2**	5.5	3490	2.2	15.0	71-80-90-100-112-132-160	21100	24400	37500	45100	13600	7300
	304 L3	**105**	4.8	3690	2.0	15.0	71-80-90-100-112-132-160	22200	25600	39200	47100	14200	7300
	304 L3	**111**	4.5	3500	1.8	15.0	71-80-90-100-112-132-160	22600	26100	39800	47900	14500	7300
	304 L3	**130**	3.8	3710	1.6	15.0	71-80-90-100-112-132-160	23900	27600	41900	50400	15300	7300
	304 L3	**141**	3.5	3720	1.5	15.0	71-80-90-100-112-132-160	24600	28400	42900	51600	15800	7300
	304 L3	**150**	3.3	3510	1.3	15.0	71-80-90-100-112-132-160	25000	28900	43600	52500	16000	7300
	304 L3	**165**	3.0	2510	0.87	15.0	71-80-90-100-112-132-160	25800	29800	44900	54000	16600	7300
	304 L3	**178**	2.8	3130	1.0	15.0	71-80-90-100-112-132-160	26500	30600	45900	55200	17000	7300
	304 L3	**202**	2.5	2560	0.73	15.0	71-80-90-100-112-132-160	27600	31900	47700	57400	17700	7300
	304 L3	**220**	2.3	3740	0.97	15.0	71-80-90-100-112-132-160	28500	32900	49000	58900	18300	7300
	304 L3	**273**	1.8	2700	0.57	15.0	71-80-90-100-112-132-160	30600	35300	52200	62800	19600	7300
	304 L3	**341**	1.5	2810	0.47	15.0	71-80-90-100-112-132-160	32900	38000	55800	67200	21100	7300
	304 L3	**426**	1.2	2920	0.39	15.0	71-80-90-100-112-132-160	35500	40900	59700	71800	22700	7300
	304 L4	**413**	1.2	3620	0.52	12.0	71-80-90-100-112-132-160	35100	40500	59100	71200	22500	7300
	304 L4	**446**	1.1	3930	0.52	12.0	71-80-90-100-112-132-160	36000	41600	60500	72800	23100	7300
	304 L4	**492**	1.0	3960	0.48	12.0	71-80-90-100-112-132-160	36000	42000	62300	74000	23900	7300
	304 L4	**556**	0.90	3960	0.42	12.0	71-80-90-100-112-132-160	36000	42000	64000	74000	24000	7300
	304 L4	**649**	0.77	3710	0.34	12.0	71-80-90-100-112-132-160	36000	42000	64000	74000	24000	7300

B

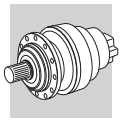

304 L

276

3960 Nm

n_1 min^{-1}		i	n_2 min^{-1}	M_{n2} Nm	P_{n1} kW	P_t kW	P (IEC)	Rn_2 [N] MC	MZ	HC/PC	HZ/PZ	FZ	$M_{2\,max}$ Nm
500	**304 L4**	**702**	0.71	3000	0.25	12.0	71-80-90-100-112-132-160	36000	42000	64000	74000	24000	7300
	304 L4	**816**	0.61	3960	0.29	12.0	71-80-90-100-112-132-160	36000	42000	64000	74000	24000	7300
	304 L4	**1018**	0.49	3960	0.23	12.0	71-80-90-100-112-132-160	36000	42000	64000	74000	24000	7300
	304 L4	**1164**	0.43	3000	0.15	12.0	71-80-90-100-112-132-160	36000	42000	64000	74000	24000	7300
	304 L4	**1271**	0.39	3960	0.18	12.0	71-80-90-100-112-132-160	36000	42000	64000	74000	24000	7300
	304 L4	**1344**	0.37	3710	0.16	12.0	71-80-90-100-112-132-160	36000	42000	64000	74000	24000	7300
	304 L4	**1586**	0.32	3960	0.15	12.0	71-80-90-100-112-132-160	36000	42000	64000	74000	24000	7300
	304 L4	**1815**	0.28	3000	0.10	12.0	71-80-90-100-112-132-160	36000	42000	64000	74000	24000	7300
	304 L4	**1991**	0.25	3740	0.11	12.0	71-80-90-100-112-132-160	36000	42000	64000	74000	24000	7300
	304 L4	**2269**	0.22	3000	0.08	12.0	71-80-90-100-112-132-160	36000	42000	64000	74000	24000	7300
	304 L4	**2453**	0.20	3000	0.07	12.0	71-80-90-100-112-132-160	36000	42000	64000	74000	24000	7300

B

305 L

288

5800 Nm

n_1 min^{-1}		i	n_2 min^{-1}	M_{n2} Nm	P_{n1} kW	P_t kW	P (IEC)	Rn_2 [N] MC	MZ	HC/PC	HZ/PZ	FZ	$M_{2\,max}$ Nm
1500	**305 L1**	**3.60**	417	2370	60	13.0	132-160-180-200	5010	5780	10300	12300	3210	8800
	305 L1	**4.25**	353	2450	60	13.0	132-160-180-200	5290	6110	10800	13000	3400	8800
	305 L1	**5.33**	281	2560	60	13.0	132-160-180-200	5710	6590	11500	13900	3660	8800
	305 L1	**6.20**	242	2650	60	13.0	132-160-180-200	6000	6930	12100	14500	3850	8800
	305 L1	**7.50**	200	2270	49	13.0	132-160-180-200	6400	7390	12800	15400	4100	8800
	305 L2	**12.5**	120	2930	30	9.0	71-80-90-100-112-132-160	7590	8760	14900	17900	4870	8800
	305 L2	**15.3**	98	3060	30	9.0	71-80-90-100-112-132-160	8120	9380	15800	19100	5210	8800
	305 L2	**18.1**	83	3620	30	9.0	71-80-90-100-112-132-160	8580	9910	16600	20000	5510	8800
	305 L2	**20.8**	72	3250	26	9.0	71-80-90-100-112-132-160	8980	10400	17300	20900	5760	8800
	305 L2	**22.7**	66	3940	29	9.0	71-80-90-100-112-132-160	9260	10700	17800	21400	5940	8800
	305 L2	**24.5**	61	3830	26	9.0	71-80-90-100-112-132-160	9490	11000	18200	21900	6090	8800
	305 L2	**26.4**	57	3530	22	9.0	71-80-90-100-112-132-160	9740	11200	18600	22400	6250	8800
	305 L2	**30.8**	49	4280	23	9.0	71-80-90-100-112-132-160	10200	11800	19500	23500	6570	8800
	305 L2	**35.8**	42	3560	16.6	9.0	71-80-90-100-112-132-160	10800	12400	20400	24600	6910	8800
	305 L2	**38.4**	39	4300	18.7	9.0	71-80-90-100-112-132-160	11000	12700	20900	25100	7070	8800
	305 L2	**44.6**	34	3560	13.3	9.0	71-80-90-100-112-132-160	11600	13400	21800	26300	7440	8800
	305 L2	**55.8**	26.9	3540	10.6	9.0	71-80-90-100-112-132-160	12500	14400	23300	28100	8010	8800
	305 L3	**53.4**	28.1	4000	12.9	7.5	71-80-90-100-112-132-160	12300	14200	23000	27700	7900	8800
	305 L3	**63.1**	23.8	4720	12.9	7.5	71-80-90-100-112-132-160	13000	15000	24200	29100	8340	8800
	305 L3	**72.3**	20.8	4160	9.9	7.5	71-80-90-100-112-132-160	13600	15700	25200	30300	8730	8800
	305 L3	**77.2**	19.4	4820	10.7	7.5	71-80-90-100-112-132-160	13900	16100	25700	30900	8930	8800
	305 L3	**90.2**	16.6	4260	8.1	7.5	71-80-90-100-112-132-160	14700	16900	26900	32400	9400	8800
	305 L3	**105**	14.4	5030	8.3	7.5	71-80-90-100-112-132-160	15400	17800	28200	33900	9880	8800
	305 L3	**113**	13.3	3590	5.5	7.5	71-80-90-100-112-132-160	15800	18200	28800	34700	10100	8800
	305 L3	**124**	12.1	3590	5.0	7.5	71-80-90-100-112-132-160	16300	18800	29700	35700	10500	8800
	305 L3	**141**	10.6	5180	6.3	7.5	71-80-90-100-112-132-160	17000	19700	30800	37100	10900	8800
	305 L3	**152**	9.8	3600	4.1	7.5	71-80-90-100-112-132-160	17500	20200	31500	37900	11200	8800
	305 L3	**164**	9.2	4410	4.6	7.5	71-80-90-100-112-132-160	17900	20600	32200	38800	11500	8800
	305 L3	**178**	8.5	4420	4.3	7.5	71-80-90-100-112-132-160	18400	21200	33000	39700	11800	8800
	305 L3	**190**	7.9	3600	3.3	7.5	71-80-90-100-112-132-160	18800	21700	33700	40600	12100	8800
	305 L3	**220**	6.8	4750	3.7	7.5	71-80-90-100-112-132-160	19700	22800	35200	42400	12700	8800
	305 L3	**258**	5.8	3600	2.4	7.5	71-80-90-100-112-132-160	20800	24000	36900	44400	13300	8800
	305 L3	**276**	5.4	4460	2.8	7.5	71-80-90-100-112-132-160	21300	24600	37700	45400	13700	8800
	305 L3	**321**	4.7	3640	1.9	7.5	71-80-90-100-112-132-160	22400	25800	39400	47500	14400	8800
	305 L3	**389**	3.9	3170	1.4	7.5	71-80-90-100-112-132-160	23900	27500	41800	50300	15300	8800
	305 L3	**402**	3.7	3760	1.6	7.5	71-80-90-100-112-132-160	24100	27800	42200	50700	15500	8800
	305 L4	**413**	3.6	4720	2.0	6.0	71-80-90-100-112-132-160	24300	28100	42500	51200	15600	8800
	305 L4	**446**	3.4	5490	2.2	6.0	71-80-90-100-112-132-160	25000	28800	43500	52400	16000	8800
	305 L4	**492**	3.0	5340	1.9	6.0	71-80-90-100-112-132-160	25800	29800	44800	53900	16600	8800
	305 L4	**556**	2.7	5500	1.8	6.0	71-80-90-100-112-132-160	26900	31000	46500	55900	17200	8800
	305 L4	**649**	2.3	4510	1.2	6.0	71-80-90-100-112-132-160	28300	32700	48700	58600	18200	8800
	305 L4	**718**	2.1	4130	1.0	6.0	71-80-90-100-112-132-160	29300	33800	50200	60400	18800	8800
	305 L4	**816**	1.8	5410	1.2	6.0	71-80-90-100-112-132-160	30500	35300	52200	62800	19600	8800

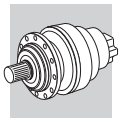

305 L

288

5800 Nm

n_1 min^{-1}		i	n_2 min^{-1}	M_{n2} Nm	P_{n1} kW	P_t kW	P (IEC)	Rn_2 [N] MC	MZ	HC/PC	HZ/PZ	FZ	$M_{2\,max}$ Nm
1500	**305 L4**	**896**	1.7	4290	0.85	6.0	71-80-90-100-112-132-160	31500	36400	53700	64600	20200	8800
	305 L4	**1018**	1.5	5450	0.95	6.0	71-80-90-100-112-132-160	32900	38000	55800	67100	21100	8800
	305 L4	**1098**	1.4	4440	0.72	6.0	71-80-90-100-112-132-160	33700	38900	57000	68600	21600	8800
	305 L4	**1278**	1.2	5500	0.76	6.0	71-80-90-100-112-132-160	35500	40900	59700	71800	22800	8800
	305 L4	**1370**	1.1	4620	0.60	6.0	71-80-90-100-112-132-160	36000	41900	60900	73300	23300	8800
	305 L4	**1586**	0.95	4750	0.53	6.0	71-80-90-100-112-132-160	36000	42000	63700	74000	24000	8800
	305 L4	**1854**	0.81	4690	0.45	6.0	71-80-90-100-112-132-160	36000	42000	64000	74000	24000	8800
	305 L4	**1991**	0.75	5600	0.50	6.0	71-80-90-100-112-132-160	36000	42000	64000	74000	24000	8800
	305 L4	**2243**	0.67	3800	0.30	6.0	71-80-90-100-112-132-160	36000	42000	64000	74000	24000	8800
	305 L4	**2799**	0.54	3800	0.24	6.0	71-80-90-100-112-132-160	36000	42000	64000	74000	24000	8800
1000	**305 L1**	**3.60**	278	2680	60	15.6	132-160-180-200	5730	6620	11600	13900	3680	8800
	305 L1	**4.25**	235	2770	60	15.6	132-160-180-200	6060	7000	12200	14600	3890	8800
	305 L1	**5.33**	188	2890	58	15.6	132-160-180-200	6540	7550	13000	15700	4190	8800
	305 L1	**6.20**	161	3000	52	15.6	132-160-180-200	6870	7930	13600	16400	4410	8800
	305 L1	**7.50**	133	2560	37	15.6	132-160-180-200	7320	8450	14400	17400	4700	8800
	305 L2	**12.5**	80	3300	29	10.8	71-80-90-100-112-132-160	8690	10000	16800	20300	5570	8800
	305 L2	**15.3**	65	3460	25	10.8	71-80-90-100-112-132-160	9300	10700	17900	21500	5960	8800
	305 L2	**18.1**	55	4090	25	10.8	71-80-90-100-112-132-160	9830	11300	18800	22600	6300	8800
	305 L2	**20.8**	48	3650	19.5	10.8	71-80-90-100-112-132-160	10300	11900	19600	23600	6600	8800
	305 L2	**22.7**	44	4290	21	10.8	71-80-90-100-112-132-160	10600	12200	20100	24200	6800	8800
	305 L2	**24.5**	41	4200	19.1	10.8	71-80-90-100-112-132-160	10900	12500	20600	24800	6970	8800
	305 L2	**26.4**	38	3560	15.0	10.8	71-80-90-100-112-132-160	11100	12900	21100	25300	7150	8800
	305 L2	**30.8**	33	4310	15.6	10.8	71-80-90-100-112-132-160	11700	13500	22000	26500	7520	8800
	305 L2	**35.8**	28.0	3570	11.1	10.8	71-80-90-100-112-132-160	12300	14200	23100	27700	7910	8800
	305 L2	**38.4**	26.0	4330	12.5	10.8	71-80-90-100-112-132-160	12600	14600	23600	28300	8100	8800
	305 L2	**44.6**	22.4	3570	8.9	10.8	71-80-90-100-112-132-160	13300	15300	24600	29600	8510	8800
	305 L2	**55.8**	17.9	3560	7.1	10.8	71-80-90-100-112-132-160	14300	16500	26300	31700	9170	8800
	305 L3	**53.4**	18.7	4190	9.0	9.0	71-80-90-100-112-132-160	14100	16300	26000	31300	9040	8800
	305 L3	**63.1**	15.9	4980	9.1	9.0	71-80-90-100-112-132-160	14900	17200	27300	32900	9550	8800
	305 L3	**72.3**	13.8	4340	6.9	9.0	71-80-90-100-112-132-160	15600	18000	28500	34300	10000	8800
	305 L3	**77.2**	12.9	5110	7.6	9.0	71-80-90-100-112-132-160	15900	18400	29000	34900	10200	8800
	305 L3	**90.2**	11.1	4440	5.7	9.0	71-80-90-100-112-132-160	16800	19400	30400	36600	10800	8800
	305 L3	**105**	9.6	5310	5.8	9.0	71-80-90-100-112-132-160	17600	20300	31800	38300	11300	8800
	305 L3	**113**	8.9	3600	3.7	9.0	71-80-90-100-112-132-160	18100	20900	32500	39100	11600	8800
	305 L3	**124**	8.0	3600	3.3	9.0	71-80-90-100-112-132-160	18700	21600	33500	40300	12000	8800
	305 L3	**141**	7.1	5260	4.3	9.0	71-80-90-100-112-132-160	19500	22500	34800	41900	12500	8800
	305 L3	**152**	6.6	3600	2.7	9.0	71-80-90-100-112-132-160	20000	23100	35600	42900	12800	8800
	305 L3	**164**	6.1	4450	3.1	9.0	71-80-90-100-112-132-160	20500	23600	36400	43800	13100	8800
	305 L3	**178**	5.6	4460	2.9	9.0	71-80-90-100-112-132-160	21000	24300	37300	44900	13500	8800
	305 L3	**190**	5.3	3600	2.2	9.0	71-80-90-100-112-132-160	21500	24800	38100	45800	13800	8800
	305 L3	**220**	4.5	4750	2.5	9.0	71-80-90-100-112-132-160	22600	26100	39800	47900	14500	8800
	305 L3	**258**	3.9	3740	1.7	9.0	71-80-90-100-112-132-160	23800	27500	41700	50200	15300	8800
	305 L3	**276**	3.6	4670	1.9	9.0	71-80-90-100-112-132-160	24400	28100	42600	51200	15600	8800
	305 L3	**321**	3.1	3870	1.4	9.0	71-80-90-100-112-132-160	25600	29600	44600	53600	16400	8800
	305 L3	**389**	2.6	3290	0.97	9.0	71-80-90-100-112-132-160	27300	31500	47200	56800	17500	8800
	305 L3	**402**	2.5	4000	1.1	9.0	71-80-90-100-112-132-160	27600	31900	47600	57300	17700	8800
	305 L4	**413**	2.4	5060	1.4	7.2	71-80-90-100-112-132-160	27900	32200	48000	57800	17900	8800
	305 L4	**446**	2.2	5530	1.5	7.2	71-80-90-100-112-132-160	28600	33000	49100	59100	18300	8800
	305 L4	**492**	2.0	5390	1.3	7.2	71-80-90-100-112-132-160	29500	34100	50600	60900	19000	8800
	305 L4	**556**	1.8	5610	1.2	7.2	71-80-90-100-112-132-160	30800	35500	52500	63200	19700	8800
	305 L4	**649**	1.5	4600	0.84	7.2	71-80-90-100-112-132-160	32400	37400	55000	66200	20800	8800
	305 L4	**718**	1.4	4430	0.73	7.2	71-80-90-100-112-132-160	33500	38700	56700	68200	21500	8800
	305 L4	**816**	1.2	5490	0.80	7.2	71-80-90-100-112-132-160	35000	40400	58900	70900	22400	8800
	305 L4	**896**	1.1	4600	0.61	7.2	71-80-90-100-112-132-160	36000	41600	60600	72900	23100	8800
	305 L4	**1018**	0.98	5530	0.64	7.2	71-80-90-100-112-132-160	36000	42000	63000	74000	24000	8800
	305 L4	**1098**	0.91	4690	0.51	7.2	71-80-90-100-112-132-160	36000	42000	64000	74000	24000	8800
	305 L4	**1278**	0.78	5600	0.52	7.2	71-80-90-100-112-132-160	36000	42000	64000	74000	24000	8800
	305 L4	**1370**	0.73	4690	0.40	7.2	71-80-90-100-112-132-160	36000	42000	64000	74000	24000	8800
	305 L4	**1586**	0.63	4750	0.35	7.2	71-80-90-100-112-132-160	36000	42000	64000	74000	24000	8800
	305 L4	**1854**	0.54	4690	0.30	7.2	71-80-90-100-112-132-160	36000	42000	64000	74000	24000	8800
	305 L4	**1991**	0.50	5600	0.33	7.2	71-80-90-100-112-132-160	36000	42000	64000	74000	24000	8800

B

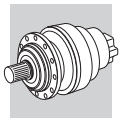

305 L

288

5800 Nm

n_1 min^{-1}		i	n_2 min^{-1}	M_{n2} Nm	P_{n1} kW	P_t kW	P (IEC)	Rn_2 [N] MC	MZ	HC/PC	HZ/PZ	FZ	$M_{2\,max}$ Nm
1000	**305 L4**	**2243**	0.45	3800	0.20	7.2	71-80-90-100-112-132-160	36000	42000	64000	74000	24000	8800
	305 L4	**2799**	0.36	3800	0.16	7.2	71-80-90-100-112-132-160	36000	42000	64000	74000	24000	8800
500	**305 L1**	**3.60**	139	3300	49	26	132-160-180-200	7220	8340	14300	17200	4630	8800
	305 L1	**4.25**	118	3410	43	26	132-160-180-200	7630	8810	15000	18000	4900	8800
	305 L1	**5.33**	94	3560	36	26	132-160-180-200	8240	9510	16000	19300	5280	8800
	305 L1	**6.20**	81	3490	30	26	132-160-180-200	8660	10000	16800	20200	5560	8800
	305 L1	**7.50**	67	2910	21	26	132-160-180-200	9230	10700	17800	21400	5920	8800
	305 L2	**12.5**	40	3890	17.3	18.0	71-80-90-100-112-132-160	10900	12600	20700	24900	7020	8800
	305 L2	**15.3**	33	3930	14.3	18.0	71-80-90-100-112-132-160	11700	13500	22000	26500	7510	8800
	305 L2	**18.1**	27.6	4580	14.1	18.0	71-80-90-100-112-132-160	12400	14300	23100	27800	7940	8800
	305 L2	**20.8**	24.1	3970	10.6	18.0	71-80-90-100-112-132-160	13000	15000	24100	29000	8310	8800
	305 L2	**22.7**	22.0	4340	10.6	18.0	71-80-90-100-112-132-160	13400	15400	24800	29800	8570	8800
	305 L2	**24.5**	20.4	4680	10.6	18.0	71-80-90-100-112-132-160	13700	15800	25300	30500	8780	8800
	305 L2	**26.4**	18.9	3580	7.5	18.0	71-80-90-100-112-132-160	14000	16200	25900	31200	9010	8800
	305 L2	**30.8**	16.3	4360	7.9	18.0	71-80-90-100-112-132-160	14800	17100	27100	32600	9480	8800
	305 L2	**35.8**	14.0	3590	5.6	18.0	71-80-90-100-112-132-160	15500	17900	28400	34200	9960	8800
	305 L2	**38.4**	13.0	4380	6.3	18.0	71-80-90-100-112-132-160	15900	18400	29000	34900	10200	8800
	305 L2	**44.6**	11.2	3600	4.5	18.0	71-80-90-100-112-132-160	16700	19300	30300	36500	10700	8800
	305 L2	**55.8**	9.0	3600	3.6	18.0	71-80-90-100-112-132-160	18000	20800	32400	39000	11600	8800
	305 L3	**53.4**	9.4	4490	4.8	15.0	71-80-90-100-112-132-160	17800	20500	32000	38500	11400	8800
	305 L3	**63.1**	7.9	5360	4.9	15.0	71-80-90-100-112-132-160	18800	21700	33600	40500	12000	8800
	305 L3	**72.3**	6.9	4490	3.6	15.0	71-80-90-100-112-132-160	19600	22700	35100	42200	12600	8800
	305 L3	**77.2**	6.5	5410	4.0	15.0	71-80-90-100-112-132-160	20100	23200	35800	43000	12900	8800
	305 L3	**90.2**	5.5	4490	2.9	15.0	71-80-90-100-112-132-160	21100	24400	37500	45100	13600	8800
	305 L3	**105**	4.8	5480	3.0	15.0	71-80-90-100-112-132-160	22200	25600	39200	47100	14200	8800
	305 L3	**113**	4.4	3670	1.9	15.0	71-80-90-100-112-132-160	22800	26300	40100	48200	14600	8800
	305 L3	**124**	4.0	3720	1.7	15.0	71-80-90-100-112-132-160	23500	27200	41300	49600	15100	8800
	305 L3	**141**	3.5	5320	2.2	15.0	71-80-90-100-112-132-160	24600	28400	42900	51600	15800	8800
	305 L3	**152**	3.3	3840	1.4	15.0	71-80-90-100-112-132-160	25200	29100	43900	52800	16200	8800
	305 L3	**164**	3.1	4870	1.7	15.0	71-80-90-100-112-132-160	25800	29800	44800	53900	16500	8800
	305 L3	**178**	2.8	4940	1.6	15.0	71-80-90-100-112-132-160	26500	30600	45900	55200	17000	8800
	305 L3	**190**	2.6	3970	1.2	15.0	71-80-90-100-112-132-160	27100	31300	46900	56400	17400	8800
	305 L3	**220**	2.3	4750	1.2	15.0	71-80-90-100-112-132-160	28500	32900	49000	58900	18300	8800
	305 L3	**258**	1.9	4180	0.93	15.0	71-80-90-100-112-132-160	30000	34600	51300	61700	19200	8800
	305 L3	**276**	1.8	5140	1.1	15.0	71-80-90-100-112-132-160	30700	35400	52400	63100	19700	8800
	305 L3	**321**	1.6	4340	0.78	15.0	71-80-90-100-112-132-160	32300	37300	54900	66000	20700	8800
	305 L3	**389**	1.3	3660	0.54	15.0	71-80-90-100-112-132-160	34400	39700	58100	69900	22100	8800
	305 L3	**402**	1.2	4520	0.64	15.0	71-80-90-100-112-132-160	34800	40200	58600	70600	22300	8800
	305 L4	**413**	1.2	5480	0.78	12.0	71-80-90-100-112-132-160	35100	40500	59100	71200	22500	8800
	305 L4	**446**	1.1	5760	0.76	12.0	71-80-90-100-112-132-160	36000	41600	60500	72800	23100	8800
	305 L4	**492**	1.0	5530	0.66	12.0	71-80-90-100-112-132-160	36000	42000	62300	74000	23900	8800
	305 L4	**556**	0.90	5800	0.62	12.0	71-80-90-100-112-132-160	36000	42000	64000	74000	24000	8800
	305 L4	**649**	0.77	4700	0.43	12.0	71-80-90-100-112-132-160	36000	42000	64000	74000	24000	8800
	305 L4	**718**	0.70	4690	0.39	12.0	71-80-90-100-112-132-160	36000	42000	64000	74000	24000	8800
	305 L4	**816**	0.61	5530	0.40	12.0	71-80-90-100-112-132-160	36000	42000	64000	74000	24000	8800
	305 L4	**896**	0.56	4690	0.31	12.0	71-80-90-100-112-132-160	36000	42000	64000	74000	24000	8800
	305 L4	**1018**	0.49	5530	0.32	12.0	71-80-90-100-112-132-160	36000	42000	64000	74000	24000	8800
	305 L4	**1098**	0.46	4690	0.25	12.0	71-80-90-100-112-132-160	36000	42000	64000	74000	24000	8800
	305 L4	**1278**	0.39	5600	0.26	12.0	71-80-90-100-112-132-160	36000	42000	64000	74000	24000	8800
	305 L4	**1370**	0.36	4690	0.20	12.0	71-80-90-100-112-132-160	36000	42000	64000	74000	24000	8800
	305 L4	**1586**	0.32	4750	0.18	12.0	71-80-90-100-112-132-160	36000	42000	64000	74000	24000	8800
	305 L4	**1854**	0.27	4690	0.15	12.0	71-80-90-100-112-132-160	36000	42000	64000	74000	24000	8800
	305 L4	**1991**	0.25	5600	0.17	12.0	71-80-90-100-112-132-160	36000	42000	64000	74000	24000	8800
	305 L4	**2243**	0.22	3800	0.10	12.0	71-80-90-100-112-132-160	36000	42000	64000	74000	24000	8800
	305 L4	**2799**	0.18	3800	0.08	12.0	71-80-90-100-112-132-160	36000	42000	64000	74000	24000	8800

B

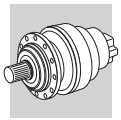

306 L

300

10840 Nm

n_1 min^{-1}		i	n_2 min^{-1}	M_{n2} Nm	P_{n1} kW	P_t kW	P (IEC)	Rn_2 [N] MC	MZ	HC/PC	HZ/PZ	FZ	$M_{2\,max}$ Nm
1500	**306 L1**	**3.60**	417	3760	75	18.0	160-180-200-225-250	6240	7070	16800	19500	4690	14900
	306 L1	**4.25**	353	3890	75	18.0	160-180-200-225-250	6590	7470	17600	20500	4950	14900
	306 L1	**5.33**	281	4060	75	18.0	160-180-200-225-250	7110	8060	18900	22000	5340	14900
	306 L1	**6.20**	242	4200	75	18.0	160-180-200-225-250	7480	8470	19700	23000	5620	14900
	306 L1	**7.50**	200	4090	75	18.0	160-180-200-225-250	7970	9030	20900	24300	5980	14900
	306 L2	**13.0**	116	4820	40	13.0	132-160-180-200	9560	10800	24600	28700	7180	14900
	306 L2	**15.3**	98	4990	40	13.0	132-160-180-200	10100	11400	25900	30100	7590	14900
	306 L2	**18.1**	83	5890	40	13.0	132-160-180-200	10700	12100	27200	31700	8020	14900
	306 L2	**22.7**	66	6140	40	13.0	132-160-180-200	11500	13000	29100	33900	8650	14900
	306 L2	**26.4**	57	6370	40	13.0	132-160-180-200	12100	13700	30500	35500	9100	14900
	306 L2	**28.4**	53	6700	39	13.0	132-160-180-200	12400	14100	31200	36300	9330	14900
	306 L2	**33.1**	45	6870	35	13.0	132-160-180-200	13100	14800	32600	38000	9810	14900
	306 L2	**38.4**	39	6470	28	13.0	132-160-180-200	13700	15600	34100	39700	10300	14900
	306 L2	**46.5**	32	6470	23	13.0	132-160-180-200	14600	16600	36100	42100	11000	14900
	306 L2	**56.3**	26.7	5210	15.5	13.0	132-160-180-200	15600	17700	38300	44500	11700	14900
	306 L2	**72.5**	20.7	5290	12.2	13.0	132-160-180-200	17000	19200	41300	48100	12700	14900
	306 L3	**53.2**	28.2	7100	20.0	7.5	71-80-90-100-112-132-160	15300	17300	37600	43800	11500	14900
	306 L3	**65.2**	23.0	7480	19.7	7.5	71-80-90-100-112-132-160	16400	18600	40000	46600	12300	14900
	306 L3	**77.0**	19.5	8350	18.7	7.5	71-80-90-100-112-132-160	17300	19600	42000	48900	13000	14900
	306 L3	**81.9**	18.3	6890	14.5	7.5	71-80-90-100-112-132-160	17700	20000	42800	49900	13300	14900
	306 L3	**88.3**	17.0	8550	16.7	7.5	71-80-90-100-112-132-160	18100	20500	43800	51000	13600	14900
	306 L3	**104**	14.4	8900	14.7	7.5	71-80-90-100-112-132-160	19200	21700	46000	53600	14400	14900
	306 L3	**112**	13.4	7410	11.3	7.5	71-80-90-100-112-132-160	19600	22200	47100	54800	14800	14900
	306 L3	**121**	12.4	7790	11.1	7.5	71-80-90-100-112-132-160	20100	22800	48200	56100	15100	14900
	306 L3	**141**	10.6	7900	9.6	7.5	71-80-90-100-112-132-160	21200	24000	50400	58700	15900	14900
	306 L3	**152**	9.9	7590	8.6	7.5	71-80-90-100-112-132-160	21700	24600	51600	60000	16300	14900
	306 L3	**190**	7.9	6510	5.9	7.5	71-80-90-100-112-132-160	23400	26500	55100	64200	17600	14900
	306 L3	**205**	7.3	8110	6.8	7.5	71-80-90-100-112-132-160	24000	27200	56400	65600	18000	14900
	306 L3	**222**	6.8	6520	5.1	7.5	71-80-90-100-112-132-160	24600	27900	57700	67200	18500	14900
	306 L3	**238**	6.3	8180	5.9	7.5	71-80-90-100-112-132-160	25200	28600	59000	68700	19000	14900
	306 L3	**268**	5.6	5500	3.5	7.5	71-80-90-100-112-132-160	26200	29700	61100	71200	19700	14900
	306 L3	**288**	5.2	5500	3.3	7.5	71-80-90-100-112-132-160	26900	30500	62400	72700	20200	14900
	306 L3	**325**	4.6	5540	2.9	7.5	71-80-90-100-112-132-160	28000	31700	64700	75400	21000	14900
	306 L3	**405**	3.7	5670	2.4	7.5	71-80-90-100-112-132-160	30100	34100	69200	80500	22600	14900
	306 L4	**391**	3.8	6840	3.1	6.0	71-80-90-100-112-132-160	29800	33700	68400	79700	22400	14900
	306 L4	**444**	3.4	9850	3.9	6.0	71-80-90-100-112-132-160	31100	35200	71100	82800	23300	14900
	306 L4	**509**	2.9	9450	3.3	6.0	71-80-90-100-112-132-160	32500	36800	74100	86300	24400	14900
	306 L4	**589**	2.5	9320	2.8	6.0	71-80-90-100-112-132-160	34100	38700	77400	90100	25600	14900
	306 L4	**636**	2.4	9450	2.6	6.0	71-80-90-100-112-132-160	35000	39600	79200	92200	26300	14900
	306 L4	**700**	2.1	9470	2.4	6.0	71-80-90-100-112-132-160	36100	40900	81500	94900	27100	14900
	306 L4	**809**	1.9	7690	1.7	6.0	71-80-90-100-112-132-160	37900	43000	85100	99100	28500	14900
	306 L4	**877**	1.7	7710	1.6	6.0	71-80-90-100-112-132-160	39000	44100	87200	101600	29300	14900
	306 L4	**1015**	1.5	9460	1.7	6.0	71-80-90-100-112-132-160	40900	46300	91100	106100	30700	14900
	306 L4	**1095**	1.4	7790	1.3	6.0	71-80-90-100-112-132-160	41900	47500	93200	108500	31500	14900
	306 L4	**1279**	1.2	8400	1.2	6.0	71-80-90-100-112-132-160	44200	50100	97700	113700	33200	14900
	306 L4	**1475**	1.0	10100	1.2	6.0	71-80-90-100-112-132-160	45000	51000	101000	118700	34800	14900
	306 L4	**1597**	0.94	8630	0.96	6.0	71-80-90-100-112-132-160	45000	51000	101000	119000	35000	14900
	306 L4	**1843**	0.81	10100	0.97	6.0	71-80-90-100-112-132-160	45000	51000	101000	119000	35000	14900
	306 L4	**2074**	0.72	7000	0.60	6.0	71-80-90-100-112-132-160	45000	51000	101000	119000	35000	14900
	306 L4	**2337**	0.64	7000	0.53	6.0	71-80-90-100-112-132-160	45000	51000	101000	119000	35000	14900
	306 L4	**2916**	0.51	7000	0.43	6.0	71-80-90-100-112-132-160	45000	51000	101000	119000	35000	14900
1000	**306 L1**	**3.60**	278	4250	75	22	160-180-200-225-250	7140	8090	18900	22100	5360	14900
	306 L1	**4.25**	235	4390	75	22	160-180-200-225-250	7550	8550	19900	23200	5670	14900
	306 L1	**5.33**	188	4580	75	22	160-180-200-225-250	8140	9220	21300	24800	6120	14900
	306 L1	**6.20**	161	4750	75	22	160-180-200-225-250	8560	9700	22300	26000	6430	14900
	306 L1	**7.50**	133	4620	67	22	160-180-200-225-250	9120	10300	23600	27500	6850	14900
	306 L2	**13.0**	77	5450	40	15.6	132-160-180-200	10900	12400	27800	32400	8220	14900
	306 L2	**15.3**	65	5640	40	15.6	132-160-180-200	11600	13100	29200	34000	8690	14900
	306 L2	**18.1**	55	6650	40	15.6	132-160-180-200	12200	13800	30700	35800	9180	14900
	306 L2	**22.7**	44	6840	34	15.6	132-160-180-200	13200	14900	32900	38300	9910	14900

B

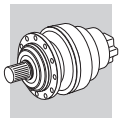

306 L

300

10840 Nm

n_1 min^{-1}		i	n_2 min^{-1}	M_{n2} Nm	P_{n1} kW	P_t kW	P (IEC)	Rn_2 [N] MC	MZ	HC/PC	HZ/PZ	FZ	$M_{2\,max}$ Nm
1000	**306 L2**	**26.4**	38	6780	29	15.6	132-160-180-200	13900	15700	34400	40100	10400	14900
	306 L2	**28.4**	35	7040	28	15.6	132-160-180-200	14200	16100	35200	41000	10700	14900
	306 L2	**33.1**	30	7150	24	15.6	132-160-180-200	15000	16900	36800	42900	11200	14900
	306 L2	**38.4**	26	6480	18.7	15.6	132-160-180-200	15700	17800	38500	44900	11800	14900
	306 L2	**46.5**	21.5	6480	15.5	15.6	132-160-180-200	16800	19000	40800	47500	12600	14900
	306 L2	**56.3**	17.8	5330	10.5	15.6	132-160-180-200	17800	20200	43200	50300	13400	14900
	306 L2	**72.5**	13.8	5400	8.3	15.6	132-160-180-200	19400	22000	46600	54300	14600	14900
	306 L3	**53.2**	18.8	7890	17.0	9.0	71-80-90-100-112-132-160	17500	19900	42500	49500	13200	14900
	306 L3	**65.2**	15.3	8320	14.6	9.0	71-80-90-100-112-132-160	18800	21200	45200	52600	14100	14900
	306 L3	**77.0**	13.0	9090	13.5	9.0	71-80-90-100-112-132-160	19800	22500	47500	55300	14900	14900
	306 L3	**81.9**	12.2	7310	10.2	9.0	71-80-90-100-112-132-160	20200	22900	48400	56300	15200	14900
	306 L3	**88.3**	11.3	9230	12.0	9.0	71-80-90-100-112-132-160	20700	23500	49500	57600	15600	14900
	306 L3	**104**	9.6	9610	10.6	9.0	71-80-90-100-112-132-160	21900	24800	52000	60500	16500	14900
	306 L3	**112**	8.9	7590	7.8	9.0	71-80-90-100-112-132-160	22500	25500	53200	61900	16900	14900
	306 L3	**121**	8.2	8050	7.6	9.0	71-80-90-100-112-132-160	23100	26100	54400	63300	17300	14900
	306 L3	**141**	7.1	8120	6.6	9.0	71-80-90-100-112-132-160	24200	27500	56900	66300	18200	14900
	306 L3	**152**	6.6	7590	5.7	9.0	71-80-90-100-112-132-160	24900	28200	58200	67800	18700	14900
	306 L3	**190**	5.3	6530	3.9	9.0	71-80-90-100-112-132-160	26800	30300	62200	72500	20100	14900
	306 L3	**205**	4.9	8330	4.7	9.0	71-80-90-100-112-132-160	27500	31100	63700	74100	20600	14900
	306 L3	**222**	4.5	6650	3.4	9.0	71-80-90-100-112-132-160	28200	31900	65200	75900	21200	14900
	306 L3	**238**	4.2	8550	4.1	9.0	71-80-90-100-112-132-160	28900	32700	66600	77600	21700	14900
	306 L3	**268**	3.7	5670	2.4	9.0	71-80-90-100-112-132-160	30000	34000	69000	80400	22600	14900
	306 L3	**288**	3.5	5710	2.3	9.0	71-80-90-100-112-132-160	30800	34900	70500	82100	23100	14900
	306 L3	**325**	3.1	5780	2.0	9.0	71-80-90-100-112-132-160	32000	36300	73100	85100	24100	14900
	306 L3	**405**	2.5	5910	1.7	9.0	71-80-90-100-112-132-160	34500	39100	78100	91000	25900	14900
	306 L4	**391**	2.6	7340	2.2	7.2	71-80-90-100-112-132-160	34100	38600	77300	90000	25600	14900
	306 L4	**444**	2.3	9910	2.6	7.2	71-80-90-100-112-132-160	35500	40300	80300	93500	26700	14900
	306 L4	**509**	2.0	9450	2.2	7.2	71-80-90-100-112-132-160	37200	42200	83700	97400	27900	14900
	306 L4	**589**	1.7	9650	1.9	7.2	71-80-90-100-112-132-160	39100	44300	87400	101800	29300	14900
	306 L4	**636**	1.6	9450	1.8	7.2	71-80-90-100-112-132-160	40100	45400	89400	104100	30100	14900
	306 L4	**700**	1.4	9790	1.7	7.2	71-80-90-100-112-132-160	41400	46900	92000	107200	31100	14900
	306 L4	**809**	1.2	7820	1.1	7.2	71-80-90-100-112-132-160	43400	49200	96100	111900	32600	14900
	306 L4	**877**	1.1	7850	1.1	7.2	71-80-90-100-112-132-160	44600	50500	98500	114700	33500	14900
	306 L4	**1015**	0.99	9540	1.1	7.2	71-80-90-100-112-132-160	45000	51000	101000	119000	35000	14900
	306 L4	**1095**	0.91	7890	0.85	7.2	71-80-90-100-112-132-160	45000	51000	101000	119000	35000	14900
	306 L4	**1279**	0.78	8630	0.80	7.2	71-80-90-100-112-132-160	45000	51000	101000	119000	35000	14900
	306 L4	**1475**	0.68	10100	0.81	7.2	71-80-90-100-112-132-160	45000	51000	101000	119000	35000	14900
	306 L4	**1597**	0.63	8630	0.64	7.2	71-80-90-100-112-132-160	45000	51000	101000	119000	35000	14900
	306 L4	**1843**	0.54	10100	0.65	7.2	71-80-90-100-112-132-160	45000	51000	101000	119000	35000	14900
	306 L4	**2074**	0.48	7000	0.40	7.2	71-80-90-100-112-132-160	45000	51000	101000	119000	35000	14900
	306 L4	**2337**	0.43	7000	0.35	7.2	71-80-90-100-112-132-160	45000	51000	101000	119000	35000	14900
	306 L4	**2916**	0.34	7000	0.28	7.2	71-80-90-100-112-132-160	45000	51000	101000	119000	35000	14900
500	**306 L1**	**3.60**	139	5230	75	36	160-180-200-225-250	9000	10200	23300	27200	6760	14900
	306 L1	**4.25**	118	5410	69	36	160-180-200-225-250	9510	10800	24500	28500	7140	14900
	306 L1	**5.33**	94	5640	57	36	160-180-200-225-250	10300	11600	26200	30600	7700	14900
	306 L1	**6.20**	81	5770	50	36	160-180-200-225-250	10800	12200	27400	32000	8100	14900
	306 L1	**7.50**	67	5040	36	36	160-180-200-225-250	11500	13000	29100	33800	8630	14900
	306 L2	**13.0**	39	6470	28	26	132-160-180-200	13800	15600	34200	39900	10400	14900
	306 L2	**15.3**	33	6830	25	26	132-160-180-200	14600	16500	36000	41900	10900	14900
	306 L2	**18.1**	27.7	7760	24	26	132-160-180-200	15400	17400	37800	44100	11600	14900
	306 L2	**22.7**	22.1	7820	19.2	26	132-160-180-200	16600	18800	40500	47200	12500	14900
	306 L2	**26.4**	19.0	7190	15.2	26	132-160-180-200	17500	19800	42400	49300	13100	14900
	306 L2	**28.4**	17.6	7530	14.7	26	132-160-180-200	17900	20300	43400	50500	13500	14900
	306 L2	**33.1**	15.1	7640	12.9	26	132-160-180-200	18800	21300	45400	52800	14200	14900
	306 L2	**38.4**	13.0	6490	9.4	26	132-160-180-200	19800	22400	47500	55300	14900	14900
	306 L2	**46.5**	10.8	6500	7.8	26	132-160-180-200	21100	23900	50200	58500	15900	14900
	306 L2	**56.3**	8.9	5500	5.4	26	132-160-180-200	22500	25500	53200	61900	16900	14900
	306 L2	**72.5**	6.9	5500	4.2	26	132-160-180-200	24500	27700	57400	66800	18400	14900
	306 L3	**53.2**	9.4	9300	10.0	15.0	71-80-90-100-112-132-160	22100	25000	52300	60900	16600	14900
	306 L3	**65.2**	7.7	9320	8.2	15.0	71-80-90-100-112-132-160	23600	26800	55600	64800	17800	14900

B

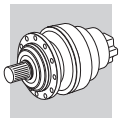

306 L

300

10840 Nm

n_1 min^{-1}		i	n_2 min^{-1}	M_{n2} Nm	P_{n1} kW	P_t kW	P (IEC)	Rn_2 [N] MC	MZ	HC/PC	HZ/PZ	FZ	$M_{2\,max}$ Nm
500	**306 L3**	**77.0**	6.5	9750	7.3	15.0	71-80-90-100-112-132-160	25000	28300	58400	68100	18800	14900
	306 L3	**81.9**	6.1	7650	5.4	15.0	71-80-90-100-112-132-160	25500	28900	59500	69300	19100	14900
	306 L3	**88.3**	5.7	9450	6.1	15.0	71-80-90-100-112-132-160	26100	29600	60900	70900	19600	14900
	306 L3	**104**	4.8	9850	5.4	15.0	71-80-90-100-112-132-160	27600	31300	64000	74500	20800	14900
	306 L3	**112**	4.5	7590	3.9	15.0	71-80-90-100-112-132-160	28300	32100	65500	76200	21300	14900
	306 L3	**121**	4.1	8580	4.1	15.0	71-80-90-100-112-132-160	29100	32900	67000	78000	21800	14900
	306 L3	**141**	3.5	8800	3.6	15.0	71-80-90-100-112-132-160	30500	34600	70100	81600	23000	14900
	306 L3	**152**	3.3	7590	2.9	15.0	71-80-90-100-112-132-160	31300	35500	71700	83500	23500	14900
	306 L3	**190**	2.6	7300	2.2	15.0	71-80-90-100-112-132-160	33700	38200	76600	89200	25300	14900
	306 L3	**205**	2.4	9370	2.6	15.0	71-80-90-100-112-132-160	34600	39200	78400	91300	26000	14900
	306 L3	**222**	2.3	7500	1.9	15.0	71-80-90-100-112-132-160	35500	40300	80300	93500	26700	14900
	306 L3	**238**	2.1	9390	2.3	15.0	71-80-90-100-112-132-160	36400	41200	82000	95500	27300	14900
	306 L3	**268**	1.9	6230	1.3	15.0	71-80-90-100-112-132-160	37900	42900	85000	99000	28400	14900
	306 L3	**288**	1.7	6320	1.3	15.0	71-80-90-100-112-132-160	38800	43900	86800	101100	29100	14900
	306 L3	**325**	1.5	6460	1.1	15.0	71-80-90-100-112-132-160	40300	45700	90000	104800	30300	14900
	306 L3	**405**	1.2	6730	0.95	15.0	71-80-90-100-112-132-160	43400	49200	96200	112000	32600	14900
	306 L4	**391**	1.3	8270	1.3	12.0	71-80-90-100-112-132-160	42900	48600	95200	110800	32200	14900
	306 L4	**444**	1.1	10300	1.4	12.0	71-80-90-100-112-132-160	44800	50700	98900	115100	33600	14900
	306 L4	**509**	0.98	9450	1.1	12.0	71-80-90-100-112-132-160	45000	51000	101000	119000	35000	14900
	306 L4	**589**	0.85	10100	1.0	12.0	71-80-90-100-112-132-160	45000	51000	101000	119000	35000	14900
	306 L4	**636**	0.79	9450	0.88	12.0	71-80-90-100-112-132-160	45000	51000	101000	119000	35000	14900
	306 L4	**700**	0.71	10100	0.85	12.0	71-80-90-100-112-132-160	45000	51000	101000	119000	35000	14900
	306 L4	**809**	0.62	7890	0.58	12.0	71-80-90-100-112-132-160	45000	51000	101000	119000	35000	14900
	306 L4	**877**	0.57	7890	0.53	12.0	71-80-90-100-112-132-160	45000	51000	101000	119000	35000	14900
	306 L4	**1015**	0.49	9540	0.56	12.0	71-80-90-100-112-132-160	45000	51000	101000	119000	35000	14900
	306 L4	**1095**	0.46	7890	0.43	12.0	71-80-90-100-112-132-160	45000	51000	101000	119000	35000	14900
	306 L4	**1279**	0.39	8630	0.40	12.0	71-80-90-100-112-132-160	45000	51000	101000	119000	35000	14900
	306 L4	**1475**	0.34	10100	0.40	12.0	71-80-90-100-112-132-160	45000	51000	101000	119000	35000	14900
	306 L4	**1597**	0.31	8630	0.32	12.0	71-80-90-100-112-132-160	45000	51000	101000	119000	35000	14900
	306 L4	**1843**	0.27	10100	0.32	12.0	71-80-90-100-112-132-160	45000	51000	101000	119000	35000	14900
	306 L4	**2074**	0.24	7000	0.20	12.0	71-80-90-100-112-132-160	45000	51000	101000	119000	35000	14900
	306 L4	**2337**	0.21	7000	0.18	12.0	71-80-90-100-112-132-160	45000	51000	101000	119000	35000	14900
	306 L4	**2916**	0.17	7000	0.14	12.0	71-80-90-100-112-132-160	45000	51000	101000	119000	35000	14900

307 L

312

15680 Nm

n_1 min^{-1}		i	n_2 min^{-1}	M_{n2} Nm	P_{n1} kW	P_t kW	P (IEC)	Rn_2 [N] MC	MZ	HC/PC	HZ/PZ	FZ	$M_{2\,max}$ Nm
1500	**307 L1**	**3.43**	438	5110	115	22	180-200-225-250	6820	8560	17800	23300	5930	18600
	307 L1	**4.09**	367	5260	115	22	180-200-225-250	7230	9070	18700	24600	6290	21000
	307 L1	**5.25**	286	5540	115	22	180-200-225-250	7860	9860	20200	26500	6830	21000
	307 L1	**6.23**	241	5750	115	22	180-200-225-250	8320	10400	21300	27900	7230	21000
	307 L2	**12.3**	122	7510	60	18.0	132-160-180-200	10500	13100	26100	34200	9080	18600
	307 L2	**14.7**	102	7730	60	18.0	132-160-180-200	11100	13900	27500	36100	9640	21000
	307 L2	**17.4**	86	8120	60	18.0	132-160-180-200	11700	14700	28900	37900	10200	21000
	307 L2	**21.8**	69	8690	60	18.0	132-160-180-200	12600	15900	31000	40600	11000	21000
	307 L2	**25.4**	59	9090	60	18.0	132-160-180-200	13300	16700	32400	42500	11600	21000
	307 L2	**28.0**	54	9150	55	18.0	132-160-180-200	13700	17200	33400	43700	11900	21000
	307 L2	**30.7**	49	9590	52	18.0	132-160-180-200	14200	17800	34300	45000	12300	21000
	307 L2	**32.6**	46	9410	48	18.0	132-160-180-200	14400	18100	34900	45800	12600	21000
	307 L2	**38.6**	39	8310	36	18.0	132-160-180-200	15300	19200	36800	48200	13300	21000
	307 L2	**46.7**	32	8360	30	18.0	132-160-180-200	16300	20400	38900	51000	14200	21000
	307 L3	**51.3**	29.3	10700	30	11.0	71-80-90-100-112-132-160	16800	21100	40000	52400	14600	21000
	307 L3	**60.5**	24.8	11100	30	11.0	71-80-90-100-112-132-160	17800	22300	42100	55100	15400	21000
	307 L3	**74.1**	20.2	11600	27	11.0	71-80-90-100-112-132-160	19000	23800	44700	58600	16500	21000
	307 L3	**80.6**	18.6	10200	22	11.0	71-80-90-100-112-132-160	19500	24500	45800	60100	17000	21000
	307 L3	**93.0**	16.1	12200	23	11.0	71-80-90-100-112-132-160	20500	25700	47900	62700	17800	21000
	307 L3	**100**	15.0	12400	21	11.0	71-80-90-100-112-132-160	21000	26400	49000	64100	18300	21000
	307 L3	**113**	13.2	10500	16.0	11.0	71-80-90-100-112-132-160	21900	27500	50800	66500	19000	21000

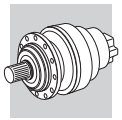

307 L

312

15680 Nm

n_1 min^{-1}		i	n_2 min^{-1}	M_{n2} Nm	P_{n1} kW	P_t kW	P (IEC)	Rn_2 [N] MC	MZ	HC/PC	HZ/PZ	FZ	$M_{2\,max}$ Nm
1500	**307 L3**	**126**	11.9	13000	17.8	11.0	71-80-90-100-112-132-160	22700	28400	52400	68700	19700	21000
	307 L3	**139**	10.8	10700	13.3	11.0	71-80-90-100-112-132-160	23400	29400	54000	70700	20400	21000
	307 L3	**146**	10.3	13400	15.8	11.0	71-80-90-100-112-132-160	23800	29900	54800	71800	20700	21000
	307 L3	**162**	9.3	10800	11.6	11.0	71-80-90-100-112-132-160	24600	30900	56500	74000	21400	21000
	307 L3	**177**	8.5	12300	12.0	11.0	71-80-90-100-112-132-160	25400	31900	58000	76100	22100	21000
	307 L3	**202**	7.4	11000	9.4	11.0	71-80-90-100-112-132-160	26500	33300	60400	79100	23100	21000
	307 L3	**221**	6.8	12700	9.9	11.0	71-80-90-100-112-132-160	27300	34300	62000	81300	23800	21000
	307 L3	**239**	6.3	8700	6.3	11.0	71-80-90-100-112-132-160	28100	35200	63500	83300	24400	21000
	307 L3	**284**	5.3	11300	6.8	11.0	71-80-90-100-112-132-160	29700	37300	66900	87600	25800	21000
	307 L3	**336**	4.5	8840	4.5	11.0	71-80-90-100-112-132-160	31500	39500	70400	92200	27300	21000
	307 L4	**349**	4.3	14900	7.6	7.5	71-80-90-100-112-132-160	31800	40000	71200	93300	27700	21000
	307 L4	**406**	3.7	11900	5.2	7.5	71-80-90-100-112-132-160	33500	42000	74400	97500	29100	21000
	307 L4	**465**	3.2	12200	4.6	7.5	71-80-90-100-112-132-160	35000	44000	77500	101600	30500	21000
	307 L4	**509**	2.9	14000	4.9	7.5	71-80-90-100-112-132-160	36100	45300	79700	104400	31400	21000
	307 L4	**579**	2.6	14900	4.6	7.5	71-80-90-100-112-132-160	37700	47300	82800	108500	32800	21000
	307 L4	**654**	2.3	12900	3.5	7.5	71-80-90-100-112-132-160	39200	49200	85900	112600	34100	21000
	307 L4	**722**	2.1	15000	3.7	7.5	71-80-90-100-112-132-160	40600	50900	88500	116000	35300	21000
	307 L4	**801**	1.9	13300	3.0	7.5	71-80-90-100-112-132-160	42000	52700	91300	119600	36500	21000
	307 L4	**906**	1.7	15200	3.0	7.5	71-80-90-100-112-132-160	43800	54900	94700	124200	38000	21000
	307 L4	**999**	1.5	13800	2.5	7.5	71-80-90-100-112-132-160	45200	56700	97600	127800	39300	21000
	307 L4	**1157**	1.3	14200	2.2	7.5	71-80-90-100-112-132-160	47500	59600	101900	133600	41300	21000
	307 L4	**1274**	1.2	12300	1.7	7.5	71-80-90-100-112-132-160	49000	61500	104900	137500	42600	21000
	307 L4	**1408**	1.1	15600	2.0	7.5	71-80-90-100-112-132-160	50700	63600	108100	141700	44100	21000
	307 L4	**1591**	0.94	15000	1.7	7.5	71-80-90-100-112-132-160	52000	65000	109000	145000	45000	21000
	307 L4	**1767**	0.85	15700	1.6	7.5	71-80-90-100-112-132-160	52000	65000	109000	145000	45000	21000
	307 L4	**2041**	0.73	14300	1.2	7.5	71-80-90-100-112-132-160	52000	65000	109000	145000	45000	21000
	307 L4	**2423**	0.62	11000	0.81	7.5	71-80-90-100-112-132-160	52000	65000	109000	145000	45000	21000
1000	**307 L1**	**3.43**	292	5770	115	26	180-200-225-250	7810	9790	20100	26300	6790	18600
	307 L1	**4.09**	244	5940	115	26	180-200-225-250	8280	10400	21200	27700	7200	21000
	307 L1	**5.25**	190	6260	115	26	180-200-225-250	9000	11300	22800	29900	7820	21000
	307 L1	**6.23**	160	6500	113	26	180-200-225-250	9530	12000	24000	31500	8280	21000
	307 L2	**12.3**	81	8060	60	22	132-160-180-200	12000	15000	29500	38600	10400	18600
	307 L2	**14.7**	68	8720	60	22	132-160-180-200	12700	15900	31100	40700	11000	21000
	307 L2	**17.4**	58	9170	59	22	132-160-180-200	13400	16800	32700	42800	11700	21000
	307 L2	**21.8**	46	9740	50	22	132-160-180-200	14500	18100	35000	45800	12600	21000
	307 L2	**25.4**	39	10100	44	22	132-160-180-200	15200	19100	36600	48000	13200	21000
	307 L2	**28.0**	36	9630	38	22	132-160-180-200	15700	19700	37700	49400	13700	21000
	307 L2	**30.7**	33	10200	37	22	132-160-180-200	16200	20300	38800	50800	14100	21000
	307 L2	**32.6**	31	9760	33	22	132-160-180-200	16500	20700	39400	51700	14400	21000
	307 L2	**38.6**	25.9	8430	24	22	132-160-180-200	17500	22000	41500	54400	15200	21000
	307 L2	**46.7**	21.4	8480	20	22	132-160-180-200	18600	23400	44000	57600	16200	21000
	307 L3	**51.3**	19.5	11700	26	13.2	71-80-90-100-112-132-160	19200	24100	45200	59200	16700	21000
	307 L3	**60.5**	16.5	12100	23	13.2	71-80-90-100-112-132-160	20300	25500	47500	62300	17700	21000
	307 L3	**74.1**	13.5	12700	19.6	13.2	71-80-90-100-112-132-160	21700	27300	50500	66200	18900	21000
	307 L3	**80.6**	12.4	10600	15.1	13.2	71-80-90-100-112-132-160	22400	28100	51800	67800	19400	21000
	307 L3	**93.0**	10.8	13300	16.4	13.2	71-80-90-100-112-132-160	23500	29400	54000	70800	20400	21000
	307 L3	**100**	10.0	13500	15.5	13.2	71-80-90-100-112-132-160	24100	30200	55300	72400	20900	21000
	307 L3	**113**	8.8	10900	11.0	13.2	71-80-90-100-112-132-160	25000	31400	57300	75100	21800	21000
	307 L3	**126**	7.9	14000	12.7	13.2	71-80-90-100-112-132-160	25900	32600	59200	77600	22600	21000
	307 L3	**139**	7.2	11000	9.1	13.2	71-80-90-100-112-132-160	26800	33600	60900	79900	23300	21000
	307 L3	**146**	6.8	13800	10.8	13.2	71-80-90-100-112-132-160	27300	34200	61900	81100	23700	21000
	307 L3	**162**	6.2	11100	7.9	13.2	71-80-90-100-112-132-160	28200	35400	63800	83600	24500	21000
	307 L3	**177**	5.6	12300	8.0	13.2	71-80-90-100-112-132-160	29100	36500	65600	85900	25300	21000
	307 L3	**202**	5.0	11300	6.4	13.2	71-80-90-100-112-132-160	30400	38100	68200	89300	26400	21000
	307 L3	**221**	4.5	13000	6.8	13.2	71-80-90-100-112-132-160	31300	39300	70100	91800	27200	21000
	307 L3	**239**	4.2	8920	4.3	13.2	71-80-90-100-112-132-160	32100	40300	71800	94000	27900	21000
	307 L3	**284**	3.5	12000	4.8	13.2	71-80-90-100-112-132-160	34000	42700	75500	98900	29600	21000
	307 L3	**336**	3.0	9370	3.2	13.2	71-80-90-100-112-132-160	36000	45200	79500	104200	31300	21000
	307 L4	**349**	2.9	14900	5.0	9.0	71-80-90-100-112-132-160	36500	45700	80400	105300	31700	21000
	307 L4	**406**	2.5	12700	3.7	9.0	71-80-90-100-112-132-160	38300	48100	84100	110200	33300	21000
	307 L4	**465**	2.2	13000	3.3	9.0	71-80-90-100-112-132-160	40100	50300	87600	114800	34900	21000

B

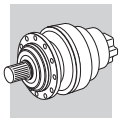

307 L

312

15680 Nm

n_1 min^{-1}		i	n_2 min^{-1}	M_{n2} Nm	P_{n1} kW	P_t kW	P (IEC)	Rn_2 [N] MC	MZ	HC/PC	HZ/PZ	FZ	$M_{2\,max}$ Nm
1000	**307 L4**	**509**	2.0	14300	3.3	9.0	71-80-90-100-112-132-160	41300	51900	90000	117900	35900	21000
	307 L4	**579**	1.7	15200	3.1	9.0	71-80-90-100-112-132-160	43100	54100	93500	122600	37500	21000
	307 L4	**654**	1.5	13800	2.5	9.0	71-80-90-100-112-132-160	44900	56400	97000	127100	39100	21000
	307 L4	**722**	1.4	15400	2.5	9.0	71-80-90-100-112-132-160	46400	58300	100000	131000	40400	21000
	307 L4	**801**	1.2	14300	2.1	9.0	71-80-90-100-112-132-160	48100	60300	103100	135100	41800	21000
	307 L4	**906**	1.1	15600	2.0	9.0	71-80-90-100-112-132-160	50100	62900	107000	140200	43500	21000
	307 L4	**999**	1.0	14800	1.8	9.0	71-80-90-100-112-132-160	51800	64900	109000	144400	45000	21000
	307 L4	**1157**	0.86	14800	1.5	9.0	71-80-90-100-112-132-160	52000	65000	109000	145000	45000	21000
	307 L4	**1274**	0.78	12300	1.1	9.0	71-80-90-100-112-132-160	52000	65000	109000	145000	45000	21000
	307 L4	**1408**	0.71	15700	1.3	9.0	71-80-90-100-112-132-160	52000	65000	109000	145000	45000	21000
	307 L4	**1591**	0.63	15000	1.1	9.0	71-80-90-100-112-132-160	52000	65000	109000	145000	45000	21000
	307 L4	**1767**	0.57	15700	1.0	9.0	71-80-90-100-112-132-160	52000	65000	109000	145000	45000	21000
	307 L4	**2041**	0.49	14300	0.83	9.0	71-80-90-100-112-132-160	52000	65000	109000	145000	45000	21000
	307 L4	**2423**	0.41	11000	0.54	9.0	71-80-90-100-112-132-160	52000	65000	109000	145000	45000	21000
500	**307 L1**	**3.43**	146	7110	112	44	180-200-225-250	9840	12300	24700	32400	8550	18600
	307 L1	**4.09**	122	7320	97	44	180-200-225-250	10400	13100	26100	34200	9070	21000
	307 L1	**5.25**	95	7700	79	44	180-200-225-250	11300	14200	28100	36800	9850	21000
	307 L1	**6.23**	80	7720	67	44	180-200-225-250	12000	15100	29600	38800	10400	21000
	307 L2	**12.3**	41	8390	38	36	132-160-180-200	15100	18900	36300	47600	13100	18600
	307 L2	**14.7**	34	10400	39	36	132-160-180-200	16000	20100	38300	50200	13900	21000
	307 L2	**17.4**	28.8	10800	34	36	132-160-180-200	16900	21200	40200	52700	14700	21000
	307 L2	**21.8**	22.9	11300	29	36	132-160-180-200	18200	22900	43100	56400	15800	21000
	307 L2	**25.4**	19.7	11700	26	36	132-160-180-200	19200	24000	45100	59000	16700	21000
	307 L2	**28.0**	17.9	10200	20	36	132-160-180-200	19800	24900	46400	60800	17200	21000
	307 L2	**30.7**	16.3	11400	21	36	132-160-180-200	20400	25600	47700	62500	17700	21000
	307 L2	**32.6**	15.4	10400	17.7	36	132-160-180-200	20800	26100	48600	63600	18100	21000
	307 L2	**38.6**	12.9	8620	12.4	36	132-160-180-200	22000	27700	51100	67000	19200	21000
	307 L2	**46.7**	10.7	8680	10.3	36	132-160-180-200	23500	29500	54100	70900	20400	21000
	307 L3	**51.3**	9.8	13600	15.2	22	71-80-90-100-112-132-160	24200	30400	55600	72900	21100	21000
	307 L3	**60.5**	8.3	13900	13.2	22	71-80-90-100-112-132-160	25600	32100	58500	76600	22300	21000
	307 L3	**74.1**	6.7	14300	11.0	22	71-80-90-100-112-132-160	27400	34400	62200	81500	23800	21000
	307 L3	**80.6**	6.2	11100	7.9	22	71-80-90-100-112-132-160	28200	35300	63700	83500	24500	21000
	307 L3	**93.0**	5.4	14700	9.1	22	71-80-90-100-112-132-160	29600	37100	66500	87200	25700	21000
	307 L3	**100**	5.0	14900	8.5	22	71-80-90-100-112-132-160	30300	38000	68100	89200	26300	21000
	307 L3	**113**	4.4	11500	5.8	22	71-80-90-100-112-132-160	31600	39600	70600	92500	27400	21000
	307 L3	**126**	4.0	14900	6.8	22	71-80-90-100-112-132-160	32700	41000	72900	95500	28400	21000
	307 L3	**139**	3.6	11900	4.9	22	71-80-90-100-112-132-160	33800	42400	75000	98300	29400	21000
	307 L3	**146**	3.4	14000	5.5	22	71-80-90-100-112-132-160	34400	43100	76200	99900	29900	21000
	307 L3	**162**	3.1	12300	4.4	22	71-80-90-100-112-132-160	35500	44600	78500	102900	30900	21000
	307 L3	**177**	2.8	12300	4.0	22	71-80-90-100-112-132-160	36600	45900	80700	105800	31800	21000
	307 L3	**202**	2.5	12700	3.6	22	71-80-90-100-112-132-160	38200	48000	83900	110000	33200	21000
	307 L3	**221**	2.3	13900	3.6	22	71-80-90-100-112-132-160	39400	49500	86300	113000	34300	21000
	307 L3	**239**	2.1	9860	2.4	22	71-80-90-100-112-132-160	40500	50800	88300	115800	35200	21000
	307 L3	**284**	1.8	13300	2.7	22	71-80-90-100-112-132-160	42800	53800	93000	121800	37200	21000
	307 L3	**336**	1.5	10400	1.8	22	71-80-90-100-112-132-160	45400	56900	97900	128200	39400	21000
	307 L4	**349**	1.4	15400	2.6	15.0	71-80-90-100-112-132-160	45900	57600	98900	129700	39900	21000
	307 L4	**406**	1.2	14300	2.1	15.0	71-80-90-100-112-132-160	48300	60600	103500	135600	42000	21000
	307 L4	**465**	1.1	14700	1.9	15.0	71-80-90-100-112-132-160	50500	63400	107800	141300	43900	21000
	307 L4	**509**	0.98	15000	1.7	15.0	71-80-90-100-112-132-160	52000	65000	109000	145000	45000	21000
	307 L4	**579**	0.86	15700	1.6	15.0	71-80-90-100-112-132-160	52000	65000	109000	145000	45000	21000
	307 L4	**654**	0.77	14800	1.3	15.0	71-80-90-100-112-132-160	52000	65000	109000	145000	45000	21000
	307 L4	**722**	0.69	15700	1.3	15.0	71-80-90-100-112-132-160	52000	65000	109000	145000	45000	21000
	307 L4	**801**	0.62	14800	1.1	15.0	71-80-90-100-112-132-160	52000	65000	109000	145000	45000	21000
	307 L4	**906**	0.55	15700	1.0	15.0	71-80-90-100-112-132-160	52000	65000	109000	145000	45000	21000
	307 L4	**999**	0.50	14800	0.88	15.0	71-80-90-100-112-132-160	52000	65000	109000	145000	45000	21000
	307 L4	**1157**	0.43	14800	0.76	15.0	71-80-90-100-112-132-160	52000	65000	109000	145000	45000	21000
	307 L4	**1274**	0.39	12300	0.57	15.0	71-80-90-100-112-132-160	52000	65000	109000	145000	45000	21000
	307 L4	**1408**	0.36	15700	0.66	15.0	71-80-90-100-112-132-160	52000	65000	109000	145000	45000	21000
	307 L4	**1591**	0.31	15000	0.56	15.0	71-80-90-100-112-132-160	52000	65000	109000	145000	45000	21000
	307 L4	**1767**	0.28	15700	0.52	15.0	71-80-90-100-112-132-160	52000	65000	109000	145000	45000	21000
	307 L4	**2041**	0.24	14300	0.42	15.0	71-80-90-100-112-132-160	52000	65000	109000	145000	45000	21000
	307 L4	**2423**	0.21	11000	0.27	15.0	71-80-90-100-112-132-160	52000	65000	109000	145000	45000	21000

B

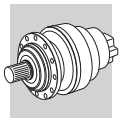

309 L

324

23240 Nm

n_1 min^{-1}		i	n_2 min^{-1}	M_{n2} Nm	P_{n1} kW	P_t kW	P (IEC)	Rn_2 [N] MC	MZ	HC/PC	HZ/PZ	FZ	$M_{2\,max}$ Nm
1500	**309 L1**	**3.43**	438	7010	150	25	180-200-225-250	—	—	18100	23300	4740	27900
	309 L1	**4.09**	367	7220	150	25	180-200-225-250	—	—	19000	24600	5030	29000
	309 L1	**5.25**	286	7600	150	25	180-200-225-250	—	—	20500	26500	5470	29000
	309 L1	**6.23**	241	7900	150	25	180-200-225-250	—	—	21600	27900	5790	29000
	309 L2	**12.3**	122	7890	60	18.0	132-160-180-200	—	—	26500	34200	7270	27900
	309 L2	**14.7**	102	9410	60	18.0	132-160-180-200	—	—	28000	36100	7710	29000
	309 L2	**17.4**	86	9730	60	18.0	132-160-180-200	—	—	29400	37900	8150	29000
	309 L2	**21.8**	69	10100	60	18.0	132-160-180-200	—	—	31500	40600	8790	29000
	309 L2	**25.4**	59	10500	60	18.0	132-160-180-200	—	—	32900	42500	9240	29000
	309 L2	**28.0**	54	12500	60	18.0	132-160-180-200	—	—	33900	43700	9550	29000
	309 L2	**32.6**	46	13000	60	18.0	132-160-180-200	—	—	35500	45800	10000	29000
	309 L2	**38.6**	39	12500	54	18.0	132-160-180-200	—	—	37400	48200	10600	29000
	309 L2	**46.7**	32	12500	45	18.0	132-160-180-200	—	—	39600	51000	11300	29000
	309 L3	**51.3**	29.3	13400	30	11.0	71-80-90-100-112-132-160	—	—	40700	52400	11700	29000
	309 L3	**60.5**	24.8	14100	30	11.0	71-80-90-100-112-132-160	—	—	42700	55100	12300	29000
	309 L3	**74.1**	20.2	15000	30	11.0	71-80-90-100-112-132-160	—	—	45400	58600	13200	29000
	309 L3	**80.6**	18.6	14800	30	11.0	71-80-90-100-112-132-160	—	—	46600	60100	13600	29000
	309 L3	**93.0**	16.1	15100	28	11.0	71-80-90-100-112-132-160	—	—	48600	62700	14200	29000
	309 L3	**100**	15	16500	28	11.0	71-80-90-100-112-132-160	—	—	49700	64100	14600	29000
	309 L3	**113**	13.2	15500	24	11.0	71-80-90-100-112-132-160	—	—	51600	66500	15200	29000
	309 L3	**126**	11.9	16400	22	11.0	71-80-90-100-112-132-160	—	—	53200	68700	15800	29000
	309 L3	**139**	10.8	16000	19.9	11.0	71-80-90-100-112-132-160	—	—	54800	70700	16300	29000
	309 L3	**162**	9.3	16300	17.3	11.0	71-80-90-100-112-132-160	—	—	57400	74000	17100	29000
	309 L3	**183**	8.2	14300	13.5	11.0	71-80-90-100-112-132-160	—	—	59500	76800	17800	29000
	309 L3	**202**	7.4	16500	14.1	11.0	71-80-90-100-112-132-160	—	—	61300	79100	18400	29000
	309 L3	**223**	6.7	13000	10.0	11.0	71-80-90-100-112-132-160	—	—	63200	81500	19100	29000
	309 L3	**239**	6.3	13000	9.4	11.0	71-80-90-100-112-132-160	—	—	64600	83300	19500	29000
	309 L3	**284**	5.3	15700	9.6	11.0	71-80-90-100-112-132-160	—	—	67900	87600	20700	29000
	309 L3	**336**	4.5	13200	6.8	11.0	71-80-90-100-112-132-160	—	—	71500	92200	21900	29000
	309 L4	**349**	4.3	21300	10.8	7.5	71-80-90-100-112-132-160	—	—	72300	93300	22100	29000
	309 L4	**406**	3.7	17800	7.8	7.5	71-80-90-100-112-132-160	—	—	75600	97500	23300	29000
	309 L4	**465**	3.2	18300	7.0	7.5	71-80-90-100-112-132-160	—	—	78800	101600	24400	29000
	309 L4	**509**	2.9	14300	5.0	7.5	71-80-90-100-112-132-160	—	—	81000	104400	25100	29000
	309 L4	**579**	2.6	21300	6.5	7.5	71-80-90-100-112-132-160	—	—	84100	108500	26200	29000
	309 L4	**654**	2.3	18100	4.9	7.5	71-80-90-100-112-132-160	—	—	87300	112600	27300	29000
	309 L4	**722**	2.1	21300	5.2	7.5	71-80-90-100-112-132-160	—	—	89900	116000	28200	29000
	309 L4	**801**	1.9	18200	4.0	7.5	71-80-90-100-112-132-160	—	—	92800	119600	29200	29000
	309 L4	**906**	1.7	17900	3.5	7.5	71-80-90-100-112-132-160	—	—	96300	124200	30400	29000
	309 L4	**999**	1.5	18200	3.2	7.5	71-80-90-100-112-132-160	—	—	99100	127800	31400	29000
	309 L4	**1149**	1.3	16200	2.5	7.5	71-80-90-100-112-132-160	—	—	103400	133300	32900	29000
	309 L4	**1286**	1.2	16500	2.3	7.5	71-80-90-100-112-132-160	—	—	106900	137900	34200	29000
	309 L4	**1380**	1.1	16700	2.2	7.5	71-80-90-100-112-132-160	—	—	109200	140900	35000	29000
	309 L4	**1605**	0.93	17000	1.9	7.5	71-80-90-100-112-132-160	—	—	110000	145000	36000	29000
	309 L4	**1723**	0.87	17000	1.8	7.5	71-80-90-100-112-132-160	—	—	110000	145000	36000	29000
	309 L4	**2003**	0.75	17000	1.5	7.5	71-80-90-100-112-132-160	—	—	110000	145000	36000	29000
	309 L4	**2423**	0.62	17000	1.2	7.5	71-80-90-100-112-132-160	—	—	110000	145000	36000	29000
1000	**309 L1**	**3.43**	292	7920	150	30	180-200-225-250	—	—	20400	26300	5430	27900
	309 L1	**4.09**	244	8150	150	30	180-200-225-250	—	—	21500	27700	5760	29000
	309 L1	**5.25**	190	8580	150	30	180-200-225-250	—	—	23200	29900	6260	29000
	309 L1	**6.23**	160	8920	150	30	180-200-225-250	—	—	24400	31500	6620	29000
	309 L2	**12.3**	81	8900	60	22	132-160-180-200	—	—	30000	38600	8320	27900
	309 L2	**14.7**	68	10600	60	22	132-160-180-200	—	—	31600	40700	8820	29000
	309 L2	**17.4**	58	11000	60	22	132-160-180-200	—	—	33200	42800	9330	29000
	309 L2	**21.8**	46	11400	58	22	132-160-180-200	—	—	35500	45800	10100	29000
	309 L2	**25.4**	39	11500	50	22	132-160-180-200	—	—	37200	48000	10600	29000
	309 L2	**28.0**	36	13500	53	22	132-160-180-200	—	—	38300	49400	10900	29000
	309 L2	**32.6**	31	13800	47	22	132-160-180-200	—	—	40100	51700	11500	29000
	309 L2	**38.6**	25.9	12600	36	22	132-160-180-200	—	—	42200	54400	12200	29000
	309 L2	**46.7**	21.4	12700	30	22	132-160-180-200	—	—	44700	57600	13000	29000

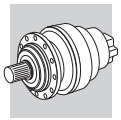

309 L

324

23240 Nm

n_1 min^{-1}		i	n_2 min^{-1}	M_{n2} Nm	P_{n1} kW	P_t kW	P (IEC)	Rn_2 [N] MC	MZ	HC/PC	HZ/PZ	FZ	$M_{2\,max}$ Nm
1000	**309 L3**	**51.3**	19.5	14900	30	13.2	71-80-90-100-112-132-160	—	—	45900	59200	13400	29000
	309 L3	**60.5**	16.5	16000	30	13.2	71-80-90-100-112-132-160	—	—	48300	62300	14100	29000
	309 L3	**74.1**	13.5	17000	26	13.2	71-80-90-100-112-132-160	—	—	51300	66200	15100	29000
	309 L3	**80.6**	12.4	15700	22	13.2	71-80-90-100-112-132-160	—	—	52600	67800	15500	29000
	309 L3	**93.0**	10.8	16800	21	13.2	71-80-90-100-112-132-160	—	—	54900	70800	16300	29000
	309 L3	**100**	10.0	18600	21	13.2	71-80-90-100-112-132-160	—	—	56200	72400	16700	29000
	309 L3	**113**	8.8	16300	16.5	13.2	71-80-90-100-112-132-160	—	—	58300	75100	17400	29000
	309 L3	**126**	7.9	17300	15.7	13.2	71-80-90-100-112-132-160	—	—	60100	77600	18000	29000
	309 L3	**139**	7.2	16500	13.7	13.2	71-80-90-100-112-132-160	—	—	61900	79900	18600	29000
	309 L3	**162**	6.2	16700	11.9	13.2	71-80-90-100-112-132-160	—	—	64800	83600	19600	29000
	309 L3	**183**	5.5	14300	9.0	13.2	71-80-90-100-112-132-160	—	—	67200	86700	20400	29000
	309 L3	**202**	5.0	17000	9.7	13.2	71-80-90-100-112-132-160	—	—	69300	89300	21100	29000
	309 L3	**223**	4.5	13200	6.8	13.2	71-80-90-100-112-132-160	—	—	71400	92100	21800	29000
	309 L3	**239**	4.2	13300	6.4	13.2	71-80-90-100-112-132-160	—	—	72900	94000	22300	29000
	309 L3	**284**	3.5	15800	6.4	13.2	71-80-90-100-112-132-160	—	—	76700	98900	23600	29000
	309 L3	**336**	3.0	14000	4.8	13.2	71-80-90-100-112-132-160	—	—	80800	104200	25000	29000
	309 L4	**349**	2.9	21300	7.2	9.0	71-80-90-100-112-132-160	—	—	81700	105300	25300	29000
	309 L4	**406**	2.5	19100	5.6	9.0	71-80-90-100-112-132-160	—	—	85400	110200	26600	29000
	309 L4	**465**	2.2	19500	5.0	9.0	71-80-90-100-112-132-160	—	—	89000	114800	27900	29000
	309 L4	**509**	2.0	14400	3.3	9.0	71-80-90-100-112-132-160	—	—	91500	117900	28700	29000
	309 L4	**579**	1.7	21400	4.4	9.0	71-80-90-100-112-132-160	—	—	95000	122600	30000	29000
	309 L4	**654**	1.5	18200	3.3	9.0	71-80-90-100-112-132-160	—	—	98600	127100	31200	29000
	309 L4	**722**	1.4	21500	3.5	9.0	71-80-90-100-112-132-160	—	—	101600	131000	32300	29000
	309 L4	**801**	1.2	18300	2.7	9.0	71-80-90-100-112-132-160	—	—	104700	135100	33400	29000
	309 L4	**906**	1.1	18400	2.4	9.0	71-80-90-100-112-132-160	—	—	108700	140200	34800	29000
	309 L4	**999**	1.0	18300	2.2	9.0	71-80-90-100-112-132-160	—	—	110000	144400	36000	29000
	309 L4	**1149**	0.87	17000	1.7	9.0	71-80-90-100-112-132-160	—	—	110000	145000	36000	29000
	309 L4	**1286**	0.78	17000	1.6	9.0	71-80-90-100-112-132-160	—	—	110000	145000	36000	29000
	309 L4	**1380**	0.72	17000	1.5	9.0	71-80-90-100-112-132-160	—	—	110000	145000	36000	29000
	309 L4	**1605**	0.62	17000	1.3	9.0	71-80-90-100-112-132-160	—	—	110000	145000	36000	29000
	309 L4	**1723**	0.58	17000	1.2	9.0	71-80-90-100-112-132-160	—	—	110000	145000	36000	29000
	309 L4	**2003**	0.50	17000	1.0	9.0	71-80-90-100-112-132-160	—	—	110000	145000	36000	29000
	309 L4	**2423**	0.41	17000	0.83	9.0	71-80-90-100-112-132-160	—	—	110000	145000	36000	29000
500	**309 L1**	**3.43**	146	9750	150	50	180-200-225-250	—	—	25100	32400	6840	27900
	309 L1	**4.09**	122	10000	132	50	180-200-225-250	—	—	26500	34200	7250	29000
	309 L1	**5.25**	95	10600	109	50	180-200-225-250	—	—	28500	36800	7880	29000
	309 L1	**6.23**	80	10900	94	50	180-200-225-250	—	—	30000	38800	8350	29000
	309 L2	**12.3**	41	10600	48	36	132-160-180-200	—	—	36900	47600	10500	27900
	309 L2	**14.7**	34	12900	49	36	132-160-180-200	—	—	38900	50200	11100	29000
	309 L2	**17.4**	28.8	13500	43	36	132-160-180-200	—	—	40900	52700	11800	29000
	309 L2	**21.8**	22.9	13700	35	36	132-160-180-200	—	—	43800	56400	12700	29000
	309 L2	**25.4**	19.7	12800	28	36	132-160-180-200	—	—	45800	59000	13300	29000
	309 L2	**28.0**	17.9	14900	30	36	132-160-180-200	—	—	47200	60800	13800	29000
	309 L2	**32.6**	15.4	15200	26	36	132-160-180-200	—	—	49300	63600	14500	29000
	309 L2	**38.6**	12.9	12900	18.6	36	132-160-180-200	—	—	51900	67000	15300	29000
	309 L2	**46.7**	10.7	13000	15.4	36	132-160-180-200	—	—	55000	70900	16300	29000
	309 L3	**51.3**	9.8	17700	19.8	22	71-80-90-100-112-132-160	—	—	56500	72900	16800	29000
	309 L3	**60.5**	8.3	19300	18.3	22	71-80-90-100-112-132-160	—	—	59400	76600	17800	29000
	309 L3	**74.1**	6.7	20100	15.5	22	71-80-90-100-112-132-160	—	—	63200	81500	19100	29000
	309 L3	**80.6**	6.2	16700	11.9	22	71-80-90-100-112-132-160	—	—	64800	83500	19600	29000
	309 L3	**93.0**	5.4	17500	10.8	22	71-80-90-100-112-132-160	—	—	67600	87200	20600	29000
	309 L3	**100**	5.0	21300	12.2	22	71-80-90-100-112-132-160	—	—	69200	89200	21100	29000
	309 L3	**113**	4.4	17100	8.7	22	71-80-90-100-112-132-160	—	—	71700	92500	21900	29000
	309 L3	**126**	4.0	17500	8.0	22	71-80-90-100-112-132-160	—	—	74000	95500	22700	29000
	309 L3	**139**	3.6	17500	7.2	22	71-80-90-100-112-132-160	—	—	76200	98300	23500	29000
	309 L3	**162**	3.1	18400	6.5	22	71-80-90-100-112-132-160	—	—	79800	102900	24700	29000
	309 L3	**183**	2.7	14300	4.5	22	71-80-90-100-112-132-160	—	—	82800	106800	25700	29000
	309 L3	**202**	2.5	19100	5.4	22	71-80-90-100-112-132-160	—	—	85300	110000	26600	29000
	309 L3	**223**	2.2	14700	3.8	22	71-80-90-100-112-132-160	—	—	87900	113300	27500	29000
	309 L3	**239**	2.1	14900	3.6	22	71-80-90-100-112-132-160	—	—	89800	115800	28200	29000
	309 L3	**284**	1.8	15800	3.2	22	71-80-90-100-112-132-160	—	—	94500	121800	29800	29000

B

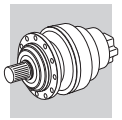

309 L

324

23240 Nm

n_1 min^{-1}		i	n_2 min^{-1}	M_{n2} Nm	P_{n1} kW	P_t kW	P (IEC)	Rn_2 [N] MC	MZ	HC/PC	HZ/PZ	FZ	$M_{2\,max}$ Nm
500	**309 L3**	**336**	1.5	15800	2.7	22	71-80-90-100-112-132-160	—	—	99400	128200	31500	29000
	309 L4	**349**	1.4	21500	3.6	15.0	71-80-90-100-112-132-160	—	—	100500	129700	31900	29000
	309 L4	**406**	1.2	21300	3.1	15.0	71-80-90-100-112-132-160	—	—	105200	135600	33600	29000
	309 L4	**465**	1.1	21700	2.8	15.0	71-80-90-100-112-132-160	—	—	109600	141300	35100	29000
	309 L4	**509**	0.98	14700	1.7	15.0	71-80-90-100-112-132-160	—	—	110000	145000	36000	29000
	309 L4	**579**	0.86	21600	2.2	15.0	71-80-90-100-112-132-160	—	—	110000	145000	36000	29000
	309 L4	**654**	0.77	18300	1.7	15.0	71-80-90-100-112-132-160	—	—	110000	145000	36000	29000
	309 L4	**722**	0.69	21600	1.8	15.0	71-80-90-100-112-132-160	—	—	110000	145000	36000	29000
	309 L4	**801**	0.62	18300	1.4	15.0	71-80-90-100-112-132-160	—	—	110000	145000	36000	29000
	309 L4	**906**	0.55	18500	1.2	15.0	71-80-90-100-112-132-160	—	—	110000	145000	36000	29000
	309 L4	**999**	0.50	18300	1.1	15.0	71-80-90-100-112-132-160	—	—	110000	145000	36000	29000
	309 L4	**1149**	0.44	17000	0.87	15.0	71-80-90-100-112-132-160	—	—	110000	145000	36000	29000
	309 L4	**1286**	0.39	17000	0.78	15.0	71-80-90-100-112-132-160	—	—	110000	145000	36000	29000
	309 L4	**1380**	0.36	17000	0.73	15.0	71-80-90-100-112-132-160	—	—	110000	145000	36000	29000
	309 L4	**1605**	0.31	17000	0.63	15.0	71-80-90-100-112-132-160	—	—	110000	145000	36000	29000
	309 L4	**1723**	0.29	17000	0.58	15.0	71-80-90-100-112-132-160	—	—	110000	145000	36000	29000
	309 L4	**2003**	0.25	17000	0.50	15.0	71-80-90-100-112-132-160	—	—	110000	145000	36000	29000
	309 L4	**2423**	0.21	17000	0.42	15.0	71-80-90-100-112-132-160	—	—	110000	145000	36000	29000

310 L

336

34120 Nm

n_1 min^{-1}		i	n_2 min^{-1}	M_{n2} Nm	P_{n1} kW	P_t kW	P (IEC)	Rn_2 [N] MC	MZ	HC/PC	HZ/PZ	FZ	$M_{2\,max}$ Nm
1500	**310 L1**	**4.09**	367	7330	175	35	200-225-250	—	—	22600	28400	9080	47600
	310 L1	**5.25**	286	7710	175	35	200-225-250	—	—	24300	30600	9870	47600
	310 L1	**6.23**	241	8020	175	35	200-225-250	—	—	25600	32200	10400	47600
	310 L2	**14.7**	102	10800	75	22	160-180-200-225-250	—	—	33100	41700	13900	47600
	310 L2	**17.4**	86	11300	75	22	160-180-200-225-250	—	—	34800	43800	14700	47600
	310 L2	**21.8**	69	12100	75	22	160-180-200-225-250	—	—	37300	46900	15900	47600
	310 L2	**25.4**	59	12700	75	22	160-180-200-225-250	—	—	39000	49100	16700	47600
	310 L2	**28.0**	54	12800	75	22	160-180-200-225-250	—	—	40200	50500	17200	47600
	310 L2	**30.7**	49	13400	73	22	160-180-200-225-250	—	—	41300	51900	17800	47600
	310 L2	**32.6**	46	13300	68	22	160-180-200-225-250	—	—	42000	52900	18100	47600
	310 L2	**38.6**	39	13600	59	22	160-180-200-225-250	—	—	44300	55700	19200	47600
	310 L2	**46.7**	32	14200	51	22	160-180-200-225-250	—	—	46900	58900	20500	47600
	310 L3	**53.0**	28.3	15800	40	18.0	132-160-180-200	—	—	48700	61200	21300	47600
	310 L3	**62.6**	24.0	16600	40	18.0	132-160-180-200	—	—	51200	64300	22500	47600
	310 L3	**73.9**	20.3	17500	40	18.0	132-160-180-200	—	—	53800	67600	23800	47600
	310 L3	**80.3**	18.7	17500	37	18.0	132-160-180-200	—	—	55100	69300	24500	47600
	310 L3	**91.3**	16.4	18600	35	18.0	132-160-180-200	—	—	57300	72100	25600	47600
	310 L3	**101**	14.9	18700	32	18.0	132-160-180-200	—	—	59000	74200	26400	47600
	310 L3	**110**	13.6	19700	31	18.0	132-160-180-200	—	—	60700	76300	27200	47600
	310 L3	**119**	12.6	19700	28	18.0	132-160-180-200	—	—	62000	78000	27900	47600
	310 L3	**130**	11.5	20700	27	18.0	132-160-180-200	—	—	63800	80200	28800	47600
	310 L3	**142**	10.6	20700	25	18.0	132-160-180-200	—	—	65400	82200	29600	47600
	310 L3	**164**	9.2	22200	23	18.0	132-160-180-200	—	—	68300	85800	31100	47600
	310 L3	**177**	8.5	18300	17.7	18.0	132-160-180-200	—	—	69900	87900	31900	47600
	310 L3	**202**	7.4	22000	18.8	18.0	132-160-180-200	—	—	72700	91400	33300	47600
	310 L3	**230**	6.5	21200	15.8	18.0	132-160-180-200	—	—	75600	95100	34800	47600
	310 L3	**249**	6.0	18400	12.7	18.0	132-160-180-200	—	—	77400	97400	35700	47600
	310 L3	**295**	5.1	23300	13.6	18.0	132-160-180-200	—	—	81500	102500	37800	47600
	310 L3	**350**	4.3	19000	9.3	18.0	132-160-180-200	—	—	85800	107900	40000	47600
	310 L4	**392**	3.8	19400	8.8	11.0	71-80-90-100-112-132-160	—	—	88700	111500	41500	47600
	310 L4	**451**	3.3	29800	11.7	11.0	71-80-90-100-112-132-160	—	—	92500	116300	43500	47600
	310 L4	**507**	3.0	25500	8.9	11.0	71-80-90-100-112-132-160	—	—	95800	120500	45300	47600
	310 L4	**556**	2.7	31600	10.1	11.0	71-80-90-100-112-132-160	—	—	98500	123900	46700	47600
	310 L4	**637**	2.4	26500	7.4	11.0	71-80-90-100-112-132-160	—	—	102600	129000	48800	47600
	310 L4	**726**	2.1	27100	6.6	11.0	71-80-90-100-112-132-160	—	—	106700	134200	51000	47600

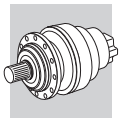

310 L

336

34120 Nm

n_1 min^{-1}		i	n_2 min^{-1}	M_{n2} Nm	P_{n1} kW	P_t kW	P (IEC)	Rn_2 [N] MC	MZ	HC/PC	HZ/PZ	FZ	$M_{2\,max}$ Nm
1500	**310 L4**	**818**	1.8	27600	6.0	11.0	71-80-90-100-112-132-160	—	—	110600	139100	53100	47600
	310 L4	**939**	1.6	33200	6.3	11.0	71-80-90-100-112-132-160	—	—	115300	145000	55600	47600
	310 L4	**1021**	1.5	28700	5.0	11.0	71-80-90-100-112-132-160	—	—	118200	148600	57200	47600
	310 L4	**1164**	1.3	29300	4.5	11.0	71-80-90-100-112-132-160	—	—	123000	154600	59700	47600
	310 L4	**1259**	1.2	27600	3.9	11.0	71-80-90-100-112-132-160	—	—	125900	158300	61300	47600
	310 L4	**1438**	1.0	25800	3.2	11.0	71-80-90-100-112-132-160	—	—	131000	164700	64100	47600
	310 L4	**1672**	0.90	26000	2.8	11.0	71-80-90-100-112-132-160	—	—	133000	166000	65000	47600
	310 L4	**1794**	0.84	26000	2.6	11.0	71-80-90-100-112-132-160	—	—	133000	166000	65000	47600
	310 L4	**2022**	0.74	26000	2.3	11.0	71-80-90-100-112-132-160	—	—	133000	166000	65000	47600
	310 L4	**2523**	0.59	26000	1.8	11.0	71-80-90-100-112-132-160	—	—	133000	166000	65000	47600
1000	**310 L1**	**4.09**	244	8280	175	42	200-225-250	—	—	25500	32100	10400	47600
	310 L1	**5.25**	190	8710	175	42	200-225-250	—	—	27500	34500	11300	47600
	310 L1	**6.23**	160	9060	157	42	200-225-250	—	—	28900	36400	12000	47600
	310 L2	**14.7**	68	12200	75	26	160-180-200-225-250	—	—	37400	47100	15900	47600
	310 L2	**17.4**	58	12800	75	26	160-180-200-225-250	—	—	39300	49500	16800	47600
	310 L2	**21.8**	46	13700	70	26	160-180-200-225-250	—	—	42100	53000	18200	47600
	310 L2	**25.4**	39	14300	63	26	160-180-200-225-250	—	—	44100	55400	19100	47600
	310 L2	**28.0**	36	14400	57	26	160-180-200-225-250	—	—	45400	57100	19700	47600
	310 L2	**30.7**	33	14900	54	26	160-180-200-225-250	—	—	46700	58700	20300	47600
	310 L2	**32.6**	31	15100	52	26	160-180-200-225-250	—	—	47500	59700	20800	47600
	310 L2	**38.6**	25.9	14800	43	26	160-180-200-225-250	—	—	50000	62900	22000	47600
	310 L2	**46.7**	21.4	15500	37	26	160-180-200-225-250	—	—	52900	66600	23400	47600
	310 L3	**53.0**	18.9	17800	39	22	132-160-180-200	—	—	55000	69100	24400	47600
	310 L3	**62.6**	16.0	18800	34	22	132-160-180-200	—	—	57800	72700	25800	47600
	310 L3	**73.9**	13.5	19700	31	22	132-160-180-200	—	—	60700	76400	27300	47600
	310 L3	**80.3**	12.4	19800	28	22	132-160-180-200	—	—	62300	78300	28000	47600
	310 L3	**91.3**	11.0	21000	26	22	132-160-180-200	—	—	64700	81400	29300	47600
	310 L3	**101**	9.9	21100	24	22	132-160-180-200	—	—	66700	83800	30300	47600
	310 L3	**110**	9.1	22200	23	22	132-160-180-200	—	—	68500	86200	31200	47600
	310 L3	**119**	8.4	21600	21	22	132-160-180-200	—	—	70100	88100	32000	47600
	310 L3	**130**	7.7	23400	21	22	132-160-180-200	—	—	72000	90600	33000	47600
	310 L3	**142**	7.1	22200	18.0	22	132-160-180-200	—	—	73800	92800	33900	47600
	310 L3	**164**	6.1	25000	17.5	22	132-160-180-200	—	—	77100	96900	35600	47600
	310 L3	**177**	5.6	18400	11.9	22	132-160-180-200	—	—	79000	99300	36500	47600
	310 L3	**202**	5.0	23400	13.3	22	132-160-180-200	—	—	82100	103200	38100	47600
	310 L3	**230**	4.3	21800	10.9	22	132-160-180-200	—	—	85400	107400	39800	47600
	310 L3	**249**	4.0	19300	8.9	22	132-160-180-200	—	—	87500	110000	40900	47600
	310 L3	**295**	3.4	24700	9.6	22	132-160-180-200	—	—	92000	115700	43300	47600
	310 L3	**350**	2.9	20600	6.8	22	132-160-180-200	—	—	96900	121800	45800	47600
	310 L4	**392**	2.6	21100	6.4	13.2	71-80-90-100-112-132-160	—	—	100200	125900	47600	47600
	310 L4	**451**	2.2	32600	8.5	13.2	71-80-90-100-112-132-160	—	—	104500	131400	49800	47600
	310 L4	**507**	2.0	27300	6.4	13.2	71-80-90-100-112-132-160	—	—	108200	136100	51800	47600
	310 L4	**556**	1.8	33000	7.0	13.2	71-80-90-100-112-132-160	—	—	111300	139900	53400	47600
	310 L4	**637**	1.6	28400	5.3	13.2	71-80-90-100-112-132-160	—	—	115900	145700	55900	47600
	310 L4	**726**	1.4	29000	4.7	13.2	71-80-90-100-112-132-160	—	—	120500	151500	58400	47600
	310 L4	**818**	1.2	29600	4.3	13.2	71-80-90-100-112-132-160	—	—	124900	157100	60800	47600
	310 L4	**939**	1.1	34000	4.3	13.2	71-80-90-100-112-132-160	—	—	130200	163700	63600	47600
	310 L4	**1021**	0.98	30600	3.5	13.2	71-80-90-100-112-132-160	—	—	133000	166000	65000	47600
	310 L4	**1164**	0.86	30600	3.1	13.2	71-80-90-100-112-132-160	—	—	133000	166000	65000	47600
	310 L4	**1259**	0.79	28000	2.6	13.2	71-80-90-100-112-132-160	—	—	133000	166000	65000	47600
	310 L4	**1438**	0.70	26000	2.1	13.2	71-80-90-100-112-132-160	—	—	133000	166000	65000	47600
	310 L4	**1672**	0.60	26000	1.8	13.2	71-80-90-100-112-132-160	—	—	133000	166000	65000	47600
	310 L4	**1794**	0.56	26000	1.7	13.2	71-80-90-100-112-132-160	—	—	133000	166000	65000	47600
	310 L4	**2022**	0.49	26000	1.5	13.2	71-80-90-100-112-132-160	—	—	133000	166000	65000	47600
	310 L4	**2523**	0.40	26000	1.2	13.2	71-80-90-100-112-132-160	—	—	133000	166000	65000	47600
500	**310 L1**	**4.09**	122	10200	134	70	200-225-250	—	—	31400	39500	13100	47600
	310 L1	**5.25**	95	10700	110	70	200-225-250	—	—	33800	42500	14200	47600
	310 L1	**6.23**	80	11200	97	70	200-225-250	—	—	35600	44800	15100	47600
	310 L2	**14.7**	34	15000	57	44	160-180-200-225-250	—	—	46100	58000	20100	47600

B

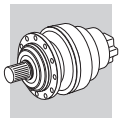

310 L

336

34120 Nm

n_1 min^{-1}		i	n_2 min^{-1}	M_{n2} Nm	P_{n1} kW	P_t kW	P (IEC)	Rn_2 [N] MC	MZ	HC/PC	HZ/PZ	FZ	$M_{2\,max}$ Nm
500	**310 L2**	**17.4**	28.8	15700	50	44	160-180-200-225-250	—	—	48400	60900	21200	47600
	310 L2	**21.8**	22.9	16800	43	44	160-180-200-225-250	—	—	51900	65200	22900	47600
	310 L2	**25.4**	19.7	17600	39	44	160-180-200-225-250	—	—	54200	68200	24100	47600
	310 L2	**28.0**	17.9	17700	35	44	160-180-200-225-250	—	—	55900	70300	24900	47600
	310 L2	**30.7**	16.3	17800	32	44	160-180-200-225-250	—	—	57400	72200	25600	47600
	310 L2	**32.6**	15.4	18600	32	44	160-180-200-225-250	—	—	58500	73500	26100	47600
	310 L2	**38.6**	12.9	17200	25	44	160-180-200-225-250	—	—	61500	77400	27700	47600
	310 L2	**46.7**	10.7	18000	21	44	160-180-200-225-250	—	—	65200	81900	29500	47600
	310 L3	**53.0**	9.4	22000	24	36	132-160-180-200	—	—	67700	85100	30800	47600
	310 L3	**62.6**	8.0	23100	21	36	132-160-180-200	—	—	71100	89400	32500	47600
	310 L3	**73.9**	6.8	24300	18.8	36	132-160-180-200	—	—	74800	94000	34400	47600
	310 L3	**80.3**	6.2	22600	16.2	36	132-160-180-200	—	—	76700	96400	35300	47600
	310 L3	**91.3**	5.5	25900	16.2	36	132-160-180-200	—	—	79700	100200	36900	47600
	310 L3	**101**	5.0	23400	13.3	36	132-160-180-200	—	—	82100	103200	38100	47600
	310 L3	**110**	4.5	27300	14.2	36	132-160-180-200	—	—	84400	106100	39300	47600
	310 L3	**119**	4.2	24000	11.6	36	132-160-180-200	—	—	86300	108500	40300	47600
	310 L3	**130**	3.8	28700	12.6	36	132-160-180-200	—	—	88700	111500	41500	47600
	310 L3	**142**	3.5	24800	10.0	36	132-160-180-200	—	—	90900	114300	42700	47600
	310 L3	**164**	3.1	30300	10.6	36	132-160-180-200	—	—	94900	119300	44800	47600
	310 L3	**177**	2.8	20700	6.7	36	132-160-180-200	—	—	97200	122200	46000	47600
	310 L3	**202**	2.5	26300	7.5	36	132-160-180-200	—	—	101100	127100	48000	47600
	310 L3	**230**	2.2	21800	5.4	36	132-160-180-200	—	—	105100	132200	50200	47600
	310 L3	**249**	2.0	22300	5.1	36	132-160-180-200	—	—	107700	135400	51500	47600
	310 L3	**295**	1.7	26800	5.2	36	132-160-180-200	—	—	113300	142500	54500	47600
	310 L3	**350**	1.4	24000	3.9	36	132-160-180-200	—	—	119300	150000	57700	47600
	310 L4	**392**	1.3	24600	3.7	22	71-80-90-100-112-132-160	—	—	123300	155100	59900	47600
	310 L4	**451**	1.1	33900	4.5	22	71-80-90-100-112-132-160	—	—	128600	161700	62800	47600
	310 L4	**507**	0.99	30600	3.6	22	71-80-90-100-112-132-160	—	—	133000	166000	65000	47600
	310 L4	**556**	0.90	34100	3.6	22	71-80-90-100-112-132-160	—	—	133000	166000	65000	47600
	310 L4	**637**	0.79	30600	2.8	22	71-80-90-100-112-132-160	—	—	133000	166000	65000	47600
	310 L4	**726**	0.69	30600	2.5	22	71-80-90-100-112-132-160	—	—	133000	166000	65000	47600
	310 L4	**818**	0.61	30600	2.2	22	71-80-90-100-112-132-160	—	—	133000	166000	65000	47600
	310 L4	**939**	0.53	34100	2.1	22	71-80-90-100-112-132-160	—	—	133000	166000	65000	47600
	310 L4	**1021**	0.49	30600	1.8	22	71-80-90-100-112-132-160	—	—	133000	166000	65000	47600
	310 L4	**1164**	0.43	30600	1.6	22	71-80-90-100-112-132-160	—	—	133000	166000	65000	47600
	310 L4	**1259**	0.40	28000	1.3	22	71-80-90-100-112-132-160	—	—	133000	166000	65000	47600
	310 L4	**1438**	0.35	26000	1.1	22	71-80-90-100-112-132-160	—	—	133000	166000	65000	47600
	310 L4	**1672**	0.30	26000	0.92	22	71-80-90-100-112-132-160	—	—	133000	166000	65000	47600
	310 L4	**1794**	0.28	26000	0.86	22	71-80-90-100-112-132-160	—	—	133000	166000	65000	47600
	310 L4	**2022**	0.25	26000	0.76	22	71-80-90-100-112-132-160	—	—	133000	166000	65000	47600
	310 L4	**2523**	0.20	26000	0.61	22	71-80-90-100-112-132-160	—	—	133000	166000	65000	47600

311 L

348

48330 Nm

n_1 min^{-1}		i	n_2 min^{-1}	M_{n2} Nm	P_{n1} kW	P_t kW	P (IEC)	Rn_2 [N] MC	MZ	HC/PC	HZ/PZ	FZ	$M_{2\,max}$ Nm
1500	**311 L1**	**4.09**	367	10600	200	35	—	—	—	26700	33200	9080	58300
	311 L1	**5.25**	286	11700	200	35	—	—	—	28700	35800	9870	58300
	311 L1	**6.23**	241	11600	200	35	—	—	—	30300	37700	10400	58300
	311 L2	**14.0**	107	15300	115	26	180-200-225-250	—	—	38600	48100	13700	58300
	311 L2	**16.7**	90	16100	115	26	180-200-225-250	—	—	40700	50700	14500	58300
	311 L2	**18.0**	83	16900	115	26	180-200-225-250	—	—	41600	51800	14900	58300
	311 L2	**21.5**	70	17400	115	26	180-200-225-250	—	—	43900	54600	15800	58300
	311 L2	**25.5**	59	18300	115	26	180-200-225-250	—	—	46200	57500	16700	58300
	311 L2	**27.6**	54	19200	115	26	180-200-225-250	—	—	47300	58900	17200	58300
	311 L2	**32.7**	46	20200	103	26	180-200-225-250	—	—	49800	62000	18200	58300
	311 L2	**38.8**	39	19700	85	26	180-200-225-250	—	—	52400	65300	19200	58300
	311 L3	**50.5**	29.7	22400	60	18.0	132-160-180-200	—	—	56700	70600	21000	58300

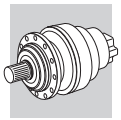

311 L

348

48330 Nm

n_1 min^{-1}		i	n_2 min^{-1}	M_{n2} Nm	P_{n1} kW	P_t kW	P (IEC)	Rn_2 [N] MC	MZ	HC/PC	HZ/PZ	FZ	$M_{2\,max}$ Nm
1500	**311 L3**	**60.2**	24.9	23700	60	18.0	132-160-180-200	—	—	59800	74500	22300	58300
	311 L3	**71.1**	21.1	24900	60	18.0	132-160-180-200	—	—	62800	78300	23500	58300
	311 L3	**77.3**	19.4	25500	57	18.0	132-160-180-200	—	—	64400	80200	24200	58300
	311 L3	**89.3**	16.8	26600	51	18.0	132-160-180-200	—	—	67300	83800	25400	58300
	311 L3	**104**	14.5	27800	46	18.0	132-160-180-200	—	—	70400	87600	26700	58300
	311 L3	**115**	13.1	28700	43	18.0	132-160-180-200	—	—	72500	90300	27600	58300
	311 L3	**126**	12.0	29500	40	18.0	132-160-180-200	—	—	74500	92800	28400	58300
	311 L3	**133**	11.3	30000	39	18.0	132-160-180-200	—	—	75800	94500	29000	58300
	311 L3	**147**	10.2	31800	37	18.0	132-160-180-200	—	—	78100	97300	30000	58300
	311 L3	**161**	9.3	31800	34	18.0	132-160-180-200	—	—	80300	100000	30900	58300
	311 L3	**171**	8.8	32600	33	18.0	132-160-180-200	—	—	81700	101800	31500	58300
	311 L3	**191**	7.8	32200	29	18.0	132-160-180-200	—	—	84500	105300	32700	58300
	311 L3	**203**	7.4	33400	28	18.0	132-160-180-200	—	—	86000	107200	33400	58300
	311 L3	**245**	6.1	34300	24	18.0	132-160-180-200	—	—	91100	113500	35500	58300
	311 L3	**291**	5.2	27000	16.0	18.0	132-160-180-200	—	—	95900	119400	37600	58300
	311 L4	**348**	4.3	39800	20	11.0	71-80-90-100-112-132-160	—	—	101100	126000	39900	58300
	311 L4	**410**	3.7	41500	18.0	11.0	71-80-90-100-112-132-160	—	—	106300	132400	42200	58300
	311 L4	**512**	2.9	44000	15.2	11.0	71-80-90-100-112-132-160	—	—	113600	141500	45400	58300
	311 L4	**568**	2.6	43000	13.4	11.0	71-80-90-100-112-132-160	—	—	117200	145900	47000	58300
	311 L4	**627**	2.4	39800	11.3	11.0	71-80-90-100-112-132-160	—	—	120700	150300	48600	58300
	311 L4	**724**	2.1	46300	11.4	11.0	71-80-90-100-112-132-160	—	—	126000	157000	51000	58300
	311 L4	**825**	1.8	44600	9.6	11.0	71-80-90-100-112-132-160	—	—	131000	163200	53300	58300
	311 L4	**904**	1.7	46900	9.2	11.0	71-80-90-100-112-132-160	—	—	134700	167800	54900	58300
	311 L4	**986**	1.5	42500	7.7	11.0	71-80-90-100-112-132-160	—	—	138300	172200	56500	58300
	311 L4	**1058**	1.4	43000	7.2	11.0	71-80-90-100-112-132-160	—	—	141200	175900	57900	58300
	311 L4	**1230**	1.2	43900	6.3	11.0	71-80-90-100-112-132-160	—	—	147800	184000	60800	58300
	311 L4	**1415**	1.1	42800	5.4	11.0	71-80-90-100-112-132-160	—	—	154100	191900	63800	58300
	311 L4	**1680**	0.89	34000	3.6	11.0	71-80-90-100-112-132-160	—	—	157000	195000	65000	58300
	311 L4	**1766**	0.85	43000	4.3	11.0	71-80-90-100-112-132-160	—	—	157000	195000	65000	58300
	311 L4	**2096**	0.72	34000	2.9	11.0	71-80-90-100-112-132-160	—	—	157000	195000	65000	58300
1000	**311 L1**	**4.09**	244	11900	200	42	—	—	—	30100	37500	10400	58300
	311 L1	**5.25**	190	13200	200	42	—	—	—	32500	40400	11300	58300
	311 L1	**6.23**	160	13100	200	42	—	—	—	34200	42600	12000	58300
	311 L2	**14.0**	71	17300	115	31	180-200-225-250	—	—	43600	54300	15700	58300
	311 L2	**16.7**	60	18200	115	31	180-200-225-250	—	—	46000	57300	16600	58300
	311 L2	**18.0**	56	19100	115	31	180-200-225-250	—	—	47000	58500	17000	58300
	311 L2	**21.5**	47	19600	102	31	180-200-225-250	—	—	49500	61700	18100	58300
	311 L2	**25.5**	39	20600	90	31	180-200-225-250	—	—	52200	65000	19100	58300
	311 L2	**27.6**	36	21700	88	31	180-200-225-250	—	—	53400	66500	19600	58300
	311 L2	**32.7**	31	22800	78	31	180-200-225-250	—	—	56200	70000	20800	58300
	311 L2	**38.8**	25.8	21700	62	31	180-200-225-250	—	—	59200	73700	22000	58300
	311 L3	**50.5**	19.8	25300	58	22	132-160-180-200	—	—	64000	79700	24000	58300
	311 L3	**60.2**	16.6	26700	51	22	132-160-180-200	—	—	67500	84100	25500	58300
	311 L3	**71.1**	14.1	28100	45	22	132-160-180-200	—	—	71000	88400	26900	58300
	311 L3	**77.3**	12.9	28800	43	22	132-160-180-200	—	—	72800	90600	27700	58300
	311 L3	**89.3**	11.2	30100	39	22	132-160-180-200	—	—	76000	94600	29000	58300
	311 L3	**104**	9.6	31400	35	22	132-160-180-200	—	—	79500	99000	30500	58300
	311 L3	**115**	8.7	32400	32	22	132-160-180-200	—	—	81900	102000	31600	58300
	311 L3	**126**	8.0	33300	30	22	132-160-180-200	—	—	84100	104800	32500	58300
	311 L3	**133**	7.5	33900	29	22	132-160-180-200	—	—	85600	106700	33200	58300
	311 L3	**147**	6.8	33800	26	22	132-160-180-200	—	—	88200	109900	34300	58300
	311 L3	**161**	6.2	35900	26	22	132-160-180-200	—	—	90700	112900	35400	58300
	311 L3	**171**	5.9	34500	23	22	132-160-180-200	—	—	92300	115000	36100	58300
	311 L3	**191**	5.2	34300	21	22	132-160-180-200	—	—	95500	118900	37400	58300
	311 L3	**203**	4.9	35300	20.0	22	132-160-180-200	—	—	97200	121000	38200	58300
	311 L3	**245**	4.1	36400	17.0	22	132-160-180-200	—	—	102900	128100	40700	58300
	311 L3	**291**	3.4	28300	11.2	22	132-160-180-200	—	—	108300	134900	43100	58300
	311 L4	**348**	2.9	44200	15.0	13.2	71-80-90-100-112-132-160	—	—	114200	142300	45700	58300
	311 L4	**410**	2.4	45900	13.2	13.2	71-80-90-100-112-132-160	—	—	120000	149500	48300	58300
	311 L4	**512**	2.0	46500	10.7	13.2	71-80-90-100-112-132-160	—	—	128300	159800	52000	58300

B

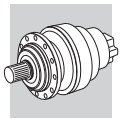

311 L

348

48330 Nm

n_1 min^{-1}		i	n_2 min^{-1}	M_{n2} Nm	P_{n1} kW	P_t kW	P (IEC)	Rn_2 [N] MC	MZ	HC/PC	HZ/PZ	FZ	$M_{2\,max}$ Nm
1000	**311 L4**	**568**	1.8	44700	9.3	13.2	71-80-90-100-112-132-160	—	—	132300	164800	53800	58300
	311 L4	**627**	1.6	42200	8.0	13.2	71-80-90-100-112-132-160	—	—	136300	169800	55600	58300
	311 L4	**724**	1.4	47400	7.7	13.2	71-80-90-100-112-132-160	—	—	142300	177300	58400	58300
	311 L4	**825**	1.2	46200	6.6	13.2	71-80-90-100-112-132-160	—	—	148000	184300	61000	58300
	311 L4	**904**	1.1	48000	6.3	13.2	71-80-90-100-112-132-160	—	—	152100	189500	62800	58300
	311 L4	**986**	1.0	45100	5.4	13.2	71-80-90-100-112-132-160	—	—	156100	194500	64700	58300
	311 L4	**1058**	0.94	45200	5.1	13.2	71-80-90-100-112-132-160	—	—	157000	195000	65000	58300
	311 L4	**1230**	0.81	45200	4.3	13.2	71-80-90-100-112-132-160	—	—	157000	195000	65000	58300
	311 L4	**1415**	0.71	43000	3.6	13.2	71-80-90-100-112-132-160	—	—	157000	195000	65000	58300
	311 L4	**1680**	0.60	34000	2.4	13.2	71-80-90-100-112-132-160	—	—	157000	195000	65000	58300
	311 L4	**1766**	0.57	43000	2.9	13.2	71-80-90-100-112-132-160	—	—	157000	195000	65000	58300
	311 L4	**2096**	0.48	34000	1.9	13.2	71-80-90-100-112-132-160	—	—	157000	195000	65000	58300
500	**311 L1**	**4.09**	122	14700	194	70	—	—	—	37100	46200	13100	58300
	311 L1	**5.25**	95	16200	167	70	—	—	—	40000	49800	14200	58300
	311 L1	**6.23**	80	16100	140	70	—	—	—	42100	52400	15100	58300
	311 L2	**14.0**	36	21200	84	52	180-200-225-250	—	—	53700	66900	19800	58300
	311 L2	**16.7**	29.9	22400	74	52	180-200-225-250	—	—	56600	70500	20900	58300
	311 L2	**18.0**	27.8	23500	73	52	180-200-225-250	—	—	57800	72100	21500	58300
	311 L2	**21.5**	23.3	24100	63	52	180-200-225-250	—	—	61000	76000	22800	58300
	311 L2	**25.5**	19.6	25400	55	52	180-200-225-250	—	—	64200	80000	24100	58300
	311 L2	**27.6**	18.1	26700	54	52	180-200-225-250	—	—	65700	81900	24700	58300
	311 L2	**32.7**	15.3	28200	48	52	180-200-225-250	—	—	69200	86200	26200	58300
	311 L2	**38.8**	12.9	25500	36	52	180-200-225-250	—	—	72800	90700	27700	58300
	311 L3	**50.5**	9.9	31200	35	36	132-160-180-200	—	—	78800	98200	30300	58300
	311 L3	**60.2**	8.3	32900	31	36	132-160-180-200	—	—	83100	103500	32100	58300
	311 L3	**71.1**	7.0	34600	28	36	132-160-180-200	—	—	87400	108800	33900	58300
	311 L3	**77.3**	6.5	35400	26	36	132-160-180-200	—	—	89600	111600	34900	58300
	311 L3	**89.3**	5.6	37000	24	36	132-160-180-200	—	—	93500	116500	36600	58300
	311 L3	**104**	4.8	38700	21	36	132-160-180-200	—	—	97800	121900	38500	58300
	311 L3	**115**	4.4	39200	19.7	36	132-160-180-200	—	—	100800	125500	39800	58300
	311 L3	**126**	4.0	40600	18.6	36	132-160-180-200	—	—	103600	129000	41000	58300
	311 L3	**133**	3.8	40300	17.4	36	132-160-180-200	—	—	105400	131300	41800	58300
	311 L3	**147**	3.4	37600	14.7	36	132-160-180-200	—	—	108600	135300	43200	58300
	311 L3	**161**	3.1	41700	14.9	36	132-160-180-200	—	—	111600	139000	44600	58300
	311 L3	**171**	2.9	38500	12.9	36	132-160-180-200	—	—	113600	141500	45400	58300
	311 L3	**191**	2.6	34500	10.4	36	132-160-180-200	—	—	117500	146400	47200	58300
	311 L3	**203**	2.5	39600	11.2	36	132-160-180-200	—	—	119600	149000	48100	58300
	311 L3	**245**	2.0	40300	9.4	36	132-160-180-200	—	—	126600	157800	51300	58300
	311 L3	**291**	1.7	31300	6.2	36	132-160-180-200	—	—	133300	166100	54300	58300
	311 L4	**348**	1.4	47300	8.1	22	71-80-90-100-112-132-160	—	—	140600	175100	57600	58300
	311 L4	**410**	1.2	47800	6.9	22	71-80-90-100-112-132-160	—	—	147800	184100	60900	58300
	311 L4	**512**	0.98	48300	5.6	22	71-80-90-100-112-132-160	—	—	157000	195000	65000	58300
	311 L4	**568**	0.88	46900	4.9	22	71-80-90-100-112-132-160	—	—	157000	195000	65000	58300
	311 L4	**627**	0.80	45200	4.3	22	71-80-90-100-112-132-160	—	—	157000	195000	65000	58300
	311 L4	**724**	0.69	48300	3.9	22	71-80-90-100-112-132-160	—	—	157000	195000	65000	58300
	311 L4	**825**	0.61	46900	3.4	22	71-80-90-100-112-132-160	—	—	157000	195000	65000	58300
	311 L4	**904**	0.55	48300	3.2	22	71-80-90-100-112-132-160	—	—	157000	195000	65000	58300
	311 L4	**986**	0.51	45200	2.7	22	71-80-90-100-112-132-160	—	—	157000	195000	65000	58300
	311 L4	**1058**	0.47	45200	2.5	22	71-80-90-100-112-132-160	—	—	157000	195000	65000	58300
	311 L4	**1230**	0.41	45200	2.2	22	71-80-90-100-112-132-160	—	—	157000	195000	65000	58300
	311 L4	**1415**	0.35	43000	1.8	22	71-80-90-100-112-132-160	—	—	157000	195000	65000	58300
	311 L4	**1680**	0.30	34000	1.2	22	71-80-90-100-112-132-160	—	—	157000	195000	65000	58300
	311 L4	**1766**	0.28	43000	1.4	22	71-80-90-100-112-132-160	—	—	157000	195000	65000	58300
	311 L4	**2096**	0.24	34000	0.96	22	71-80-90-100-112-132-160	—	—	157000	195000	65000	58300

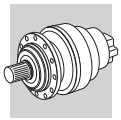

313 L

360

57970 Nm

n_1 min^{-1}		i	n_2 min^{-1}	M_{n2} Nm	P_{n1} kW	P_t kW	P (IEC)	Rn_2 [N] MC	MZ	HC/PC	HZ/PZ	FZ	$M_{2\,max}$ Nm
1500	**313 L2**	**14.2**	106	22600	150	30	180-200-225-250	—	—	47900	56700	16900	105000
	313 L2	**16.9**	89	23500	150	30	180-200-225-250	—	—	50500	59700	18000	105000
	313 L2	**18.5**	81	24100	150	30	180-200-225-250	—	—	51800	61400	18500	105000
	313 L2	**21.8**	69	25500	150	30	180-200-225-250	—	—	54400	64400	19500	105000
	313 L2	**25.8**	58	26700	150	30	180-200-225-250	—	—	57300	67800	20700	105000
	313 L2	**28.4**	53	27300	150	30	180-200-225-250	—	—	58900	69700	21300	105000
	313 L2	**33.6**	45	28800	143	30	180-200-225-250	—	—	62000	73400	22600	105000
	313 L2	**40.5**	37	29500	122	30	180-200-225-250	—	—	65600	77600	24000	105000
	313 L3	**51.1**	29.3	32700	60	18.0	132-160-180-200	—	—	70300	83200	25900	105000
	313 L3	**61.0**	24.6	34500	60	18.0	132-160-180-200	—	—	74100	87700	27500	105000
	313 L3	**72.0**	20.8	36300	60	18.0	132-160-180-200	—	—	77900	92200	29100	105000
	313 L3	**78.3**	19.2	37300	60	18.0	132-160-180-200	—	—	79900	94600	29900	105000
	313 L3	**92.4**	16.2	39300	60	18.0	132-160-180-200	—	—	84000	99400	31600	105000
	313 L3	**110**	13.7	41200	60	18.0	132-160-180-200	—	—	88400	104600	33500	105000
	313 L3	**120**	12.4	42100	60	18.0	132-160-180-200	—	—	90900	107600	34500	105000
	313 L3	**135**	11.1	44000	56	18.0	132-160-180-200	—	—	94100	111300	35800	105000
	313 L3	**143**	10.5	44400	53	18.0	132-160-180-200	—	—	95700	113300	36500	105000
	313 L3	**151**	9.9	45000	51	18.0	132-160-180-200	—	—	97300	115200	37200	105000
	313 L3	**163**	9.2	46000	49	18.0	132-160-180-200	—	—	99600	117800	38200	105000
	313 L3	**176**	8.5	45000	44	18.0	132-160-180-200	—	—	101800	120500	39100	105000
	313 L3	**182**	8.2	39000	37	18.0	132-160-180-200	—	—	102900	121800	39600	105000
	313 L3	**194**	7.7	47600	42	18.0	132-160-180-200	—	—	104800	124100	40400	105000
	313 L3	**209**	7.2	45000	37	18.0	132-160-180-200	—	—	107200	126900	41400	105000
	313 L3	**252**	5.9	45000	31	18.0	132-160-180-200	—	—	113500	134300	44200	105000
	313 L3	**304**	4.9	39100	22	18.0	132-160-180-200	—	—	120000	142000	47000	105000
	313 L4	**352**	4.3	52500	26	11.0	71-80-90-100-112-132-160	—	—	125400	148400	49300	105000
	313 L4	**394**	3.8	55000	25	11.0	71-80-90-100-112-132-160	—	—	129700	153500	51200	105000
	313 L4	**452**	3.3	54000	21	11.0	71-80-90-100-112-132-160	—	—	135200	160000	53600	105000
	313 L4	**514**	2.9	48600	16.8	11.0	71-80-90-100-112-132-160	—	—	140500	166300	56000	105000
	313 L4	**564**	2.7	54800	17.2	11.0	71-80-90-100-112-132-160	—	—	144500	171000	57700	105000
	313 L4	**633**	2.4	52000	14.6	11.0	71-80-90-100-112-132-160	—	—	149600	177000	60000	105000
	313 L4	**695**	2.2	51000	13.0	11.0	71-80-90-100-112-132-160	—	—	153800	182100	61900	105000
	313 L4	**790**	1.9	52200	11.7	11.0	71-80-90-100-112-132-160	—	—	159800	189200	64600	105000
	313 L4	**889**	1.7	53100	10.6	11.0	71-80-90-100-112-132-160	—	—	165600	196000	67200	105000
	313 L4	**1014**	1.5	54300	9.5	11.0	71-80-90-100-112-132-160	—	—	172300	203900	70200	105000
	313 L4	**1117**	1.3	52500	8.3	11.0	71-80-90-100-112-132-160	—	—	177300	209900	72500	105000
	313 L4	**1266**	1.2	56300	7.9	11.0	71-80-90-100-112-132-160	—	—	184100	217900	75600	105000
	313 L4	**1394**	1.1	52700	6.7	11.0	71-80-90-100-112-132-160	—	—	189500	224300	78100	105000
	313 L4	**1502**	1.00	58000	6.8	11.0	71-80-90-100-112-132-160	—	—	192000	229400	80000	105000
	313 L4	**1817**	0.83	58000	5.7	11.0	71-80-90-100-112-132-160	—	—	192000	231000	80000	105000
	313 L4	**2187**	0.69	49000	4.0	11.0	71-80-90-100-112-132-160	—	—	192000	231000	80000	105000
1000	**313 L2**	**14.2**	70	25600	150	36	180-200-225-250	—	—	54100	64000	19400	105000
	313 L2	**16.9**	59	26500	150	36	180-200-225-250	—	—	57000	67500	20500	105000
	313 L2	**18.5**	54	27200	150	36	180-200-225-250	—	—	58500	69300	21200	105000
	313 L2	**21.8**	46	28700	147	36	180-200-225-250	—	—	61400	72700	22300	105000
	313 L2	**25.8**	39	30100	130	36	180-200-225-250	—	—	64700	76600	23600	105000
	313 L2	**28.4**	35	30900	121	36	180-200-225-250	—	—	66500	78700	24400	105000
	313 L2	**33.6**	29.7	32500	107	36	180-200-225-250	—	—	70000	82900	25800	105000
	313 L2	**40.5**	24.7	32200	88	36	180-200-225-250	—	—	74000	87600	27500	105000
	313 L3	**51.1**	19.6	37000	60	22	132-160-180-200	—	—	79400	94000	29700	105000
	313 L3	**61.0**	16.4	39000	60	22	132-160-180-200	—	—	83700	99100	31500	105000
	313 L3	**72.0**	13.9	41000	60	22	132-160-180-200	—	—	88000	104100	33300	105000
	313 L3	**78.3**	12.8	42200	60	22	132-160-180-200	—	—	90200	106800	34200	105000
	313 L3	**92.4**	10.8	44300	55	22	132-160-180-200	—	—	94800	112200	36200	105000
	313 L3	**110**	9.1	46100	48	22	132-160-180-200	—	—	99800	118200	38300	105000
	313 L3	**120**	8.3	45000	43	22	132-160-180-200	—	—	102700	121500	39500	105000
	313 L3	**135**	7.4	49300	42	22	132-160-180-200	—	—	106200	125700	41000	105000
	313 L3	**143**	7.0	45000	36	22	132-160-180-200	—	—	108100	127900	41800	105000
	313 L3	**151**	6.6	45000	34	22	132-160-180-200	—	—	109900	130100	42600	105000
	313 L3	**163**	6.1	50200	35	22	132-160-180-200	—	—	112500	133100	43700	105000
	313 L3	**176**	5.7	45000	29	22	132-160-180-200	—	—	115000	136100	44800	105000

B

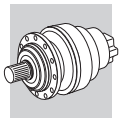

313 L

360

57970 Nm

n_1 min^{-1}		i	n_2 min^{-1}	M_{n2} Nm	P_{n1} kW	P_t kW	P (IEC)	Rn_2 [N] MC	MZ	HC/PC	HZ/PZ	FZ	$M_{2\,max}$ Nm
1000	**313 L3**	**182**	5.5	39000	25	22	132-160-180-200	—	—	116200	137500	45300	105000
	313 L3	**194**	5.2	51700	31	22	132-160-180-200	—	—	118400	140100	46300	105000
	313 L3	**209**	4.8	45300	25	22	132-160-180-200	—	—	121100	143300	47400	105000
	313 L3	**252**	4.0	46500	21	22	132-160-180-200	—	—	128200	151700	50600	105000
	313 L3	**304**	3.3	41000	15.5	22	132-160-180-200	—	—	135500	160400	53800	105000
	313 L4	**352**	2.8	52500	17.6	13.2	71-80-90-100-112-132-160	—	—	141600	167600	56500	105000
	313 L4	**394**	2.5	55000	16.5	13.2	71-80-90-100-112-132-160	—	—	146500	173400	58700	105000
	313 L4	**452**	2.2	55100	14.4	13.2	71-80-90-100-112-132-160	—	—	152700	180700	61400	105000
	313 L4	**514**	1.9	51900	11.9	13.2	71-80-90-100-112-132-160	—	—	158700	187800	64100	105000
	313 L4	**564**	1.8	55200	11.6	13.2	71-80-90-100-112-132-160	—	—	163100	193100	66100	105000
	313 L4	**633**	1.6	52400	9.8	13.2	71-80-90-100-112-132-160	—	—	168900	199900	68700	105000
	313 L4	**695**	1.4	54500	9.3	13.2	71-80-90-100-112-132-160	—	—	173700	205600	70900	105000
	313 L4	**790**	1.3	52600	7.9	13.2	71-80-90-100-112-132-160	—	—	180500	213600	74000	105000
	313 L4	**889**	1.1	56800	7.6	13.2	71-80-90-100-112-132-160	—	—	187100	221400	76900	105000
	313 L4	**1014**	0.99	58000	6.8	13.2	71-80-90-100-112-132-160	—	—	192000	230300	80000	105000
	313 L4	**1117**	0.90	52800	5.6	13.2	71-80-90-100-112-132-160	—	—	192000	231000	80000	105000
	313 L4	**1266**	0.79	58000	5.4	13.2	71-80-90-100-112-132-160	—	—	192000	231000	80000	105000
	313 L4	**1394**	0.72	52800	4.5	13.2	71-80-90-100-112-132-160	—	—	192000	231000	80000	105000
	313 L4	**1502**	0.67	58000	4.6	13.2	71-80-90-100-112-132-160	—	—	192000	231000	80000	105000
	313 L4	**1817**	0.55	58000	3.8	13.2	71-80-90-100-112-132-160	—	—	192000	231000	80000	105000
	313 L4	**2187**	0.46	49000	2.7	13.2	71-80-90-100-112-132-160	—	—	192000	231000	80000	105000
500	**313 L1**	**4.14**	121	21700	250	95	—	—	—	46000	54400	16200	105000
	313 L1	**5.40**	93	23100	231	95	—	—	—	49800	58900	17700	105000
	313 L1	**6.50**	77	24400	202	95	—	—	—	52700	62300	18800	105000
	313 L2	**14.2**	35	31500	124	60	180-200-225-250	—	—	66600	78800	24400	105000
	313 L2	**16.9**	29.5	32700	107	60	180-200-225-250	—	—	70200	83100	25900	105000
	313 L2	**18.5**	27.0	33400	100	60	180-200-225-250	—	—	72100	85300	26700	105000
	313 L2	**21.8**	23.0	35400	90	60	180-200-225-250	—	—	75600	89500	28100	105000
	313 L2	**25.8**	19.4	37100	80	60	180-200-225-250	—	—	79600	94200	29800	105000
	313 L2	**28.4**	17.6	38000	75	60	180-200-225-250	—	—	81900	96900	30700	105000
	313 L2	**33.6**	14.9	40000	66	60	180-200-225-250	—	—	86200	102000	32500	105000
	313 L2	**40.5**	12.3	37300	51	60	180-200-225-250	—	—	91200	107900	34600	105000
	313 L3	**51.1**	9.8	45300	51	36	132-160-180-200	—	—	97800	115700	37400	105000
	313 L3	**61.0**	8.2	47200	44	36	132-160-180-200	—	—	103100	122000	39700	105000
	313 L3	**72.0**	6.9	48900	39	36	132-160-180-200	—	—	108300	128200	41900	105000
	313 L3	**78.3**	6.4	51400	38	36	132-160-180-200	—	—	111100	131500	43100	105000
	313 L3	**92.4**	5.4	53800	33	36	132-160-180-200	—	—	116800	138200	45600	105000
	313 L3	**110**	4.6	52000	27	36	132-160-180-200	—	—	122900	145500	48300	105000
	313 L3	**120**	4.1	46200	22	36	132-160-180-200	—	—	126400	149600	49800	105000
	313 L3	**135**	3.7	55000	23	36	132-160-180-200	—	—	130800	154800	51700	105000
	313 L3	**143**	3.5	47400	19.0	36	132-160-180-200	—	—	133100	157500	52700	105000
	313 L3	**151**	3.3	47800	18.1	36	132-160-180-200	—	—	135300	160200	53700	105000
	313 L3	**163**	3.1	54300	19.1	36	132-160-180-200	—	—	138500	163900	55100	105000
	313 L3	**176**	2.8	48800	15.9	36	132-160-180-200	—	—	141600	167600	56500	105000
	313 L3	**182**	2.7	41900	13.2	36	132-160-180-200	—	—	143100	169300	57100	105000
	313 L3	**194**	2.6	52000	15.4	36	132-160-180-200	—	—	145800	172500	58300	105000
	313 L3	**209**	2.4	50100	13.8	36	132-160-180-200	—	—	149100	176400	59800	105000
	313 L3	**252**	2.0	51700	11.8	36	132-160-180-200	—	—	157800	186800	63700	105000
	313 L3	**304**	1.6	45300	8.6	36	132-160-180-200	—	—	166800	197500	67800	105000
	313 L4	**352**	1.4	54300	9.1	22	71-80-90-100-112-132-160	—	—	174400	206400	71200	105000
	313 L4	**394**	1.3	55300	8.3	22	71-80-90-100-112-132-160	—	—	180400	213500	73900	105000
	313 L4	**452**	1.1	55400	7.2	22	71-80-90-100-112-132-160	—	—	187900	222400	77300	105000
	313 L4	**514**	0.97	58000	6.7	22	71-80-90-100-112-132-160	—	—	192000	231000	80000	105000
	313 L4	**564**	0.89	55400	5.8	22	71-80-90-100-112-132-160	—	—	192000	231000	80000	105000
	313 L4	**633**	0.79	52800	4.9	22	71-80-90-100-112-132-160	—	—	192000	231000	80000	105000
	313 L4	**695**	0.72	58000	4.9	22	71-80-90-100-112-132-160	—	—	192000	231000	80000	105000
	313 L4	**790**	0.63	52800	4.0	22	71-80-90-100-112-132-160	—	—	192000	231000	80000	105000
	313 L4	**889**	0.56	58000	3.9	22	71-80-90-100-112-132-160	—	—	192000	231000	80000	105000
	313 L4	**1014**	0.49	58000	3.4	22	71-80-90-100-112-132-160	—	—	192000	231000	80000	105000
	313 L4	**1117**	0.45	52800	2.8	22	71-80-90-100-112-132-160	—	—	192000	231000	80000	105000

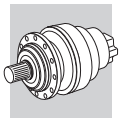

313 L — 360 — 57970 Nm

n_1 min^{-1}		i	n_2 min^{-1}	M_{n2} Nm	P_{n1} kW	P_t kW	P (IEC)	Rn_2 [N] MC	MZ	HC/PC	HZ/PZ	FZ	$M_{2\,max}$ Nm
500	**313 L4**	**1266**	0.40	58000	2.7	22	71-80-90-100-112-132-160	—	—	192000	231000	80000	105000
	313 L4	**1394**	0.36	52800	2.2	22	71-80-90-100-112-132-160	—	—	192000	231000	80000	105000
	313 L4	**1502**	0.33	58000	2.3	22	71-80-90-100-112-132-160	—	—	192000	231000	80000	105000
	313 L4	**1817**	0.28	58000	1.9	22	71-80-90-100-112-132-160	—	—	192000	231000	80000	105000
	313 L4	**2187**	0.23	49000	1.3	22	71-80-90-100-112-132-160	—	—	192000	231000	80000	105000

314 L — 372 — 84000 Nm

n_1 min^{-1}		i	n_2 min^{-1}	M_{n2} Nm	P_{n1} kW	P_t kW	P (IEC)	Rn_2 [N] MC	MZ	HC/PC	HZ/PZ	FZ	$M_{2\,max}$ Nm
1500	**314 L2**	**17.4**	86	33100	175	40	200-225-250	—	—	54300	63800	20400	115000
	314 L2	**22.3**	67	37400	175	40	200-225-250	—	—	58500	68700	22100	115000
	314 L2	**26.5**	57	37300	175	40	200-225-250	—	—	61600	72300	23400	115000
	314 L2	**28.0**	54	38200	175	40	200-225-250	—	—	62700	73600	23900	115000
	314 L2	**33.2**	45	40200	175	40	200-225-250	—	—	66000	77400	25300	115000
	314 L2	**38.6**	39	35300	152	40	200-225-250	—	—	69000	81000	26600	115000
	314 L3	**62.6**	24.0	48600	75	25	160-180-200-225-250	—	—	79800	93600	31200	115000
	314 L3	**73.9**	20.3	51100	75	25	160-180-200-225-250	—	—	83800	98400	33000	115000
	314 L3	**92.7**	16.2	54700	75	25	160-180-200-225-250	—	—	89700	105400	35600	115000
	314 L3	**108**	13.9	57200	75	25	160-180-200-225-250	—	—	93900	110200	37400	115000
	314 L3	**138**	10.8	64800	75	25	160-180-200-225-250	—	—	101200	118800	40700	115000
	314 L3	**164**	9.1	64200	67	25	160-180-200-225-250	—	—	106500	125100	43100	115000
	314 L3	**174**	8.6	63000	62	25	160-180-200-225-250	—	—	108300	127200	43900	115000
	314 L3	**206**	7.3	63800	53	25	160-180-200-225-250	—	—	114000	133900	46400	115000
	314 L3	**240**	6.3	52000	37	25	160-180-200-225-250	—	—	119300	140100	48800	115000
	314 L4	**314**	4.8	77800	40	15.0	132-160-180-200	—	—	129400	151900	53400	115000
	314 L4	**388**	3.9	78500	36	15.0	132-160-180-200	—	—	137900	161900	57300	115000
	314 L4	**458**	3.3	79100	31	15.0	132-160-180-200	—	—	144900	170100	60600	115000
	314 L4	**495**	3.0	79300	28	15.0	132-160-180-200	—	—	148300	174100	62200	115000
	314 L4	**554**	2.7	79700	26	15.0	132-160-180-200	—	—	153400	180100	64600	115000
	314 L4	**588**	2.6	79900	24	15.0	132-160-180-200	—	—	156200	183400	65900	115000
	314 L4	**668**	2.2	80500	21	15.0	132-160-180-200	—	—	162300	190600	68700	115000
	314 L4	**738**	2.0	80900	19.5	15.0	132-160-180-200	—	—	167200	196300	71000	115000
	314 L4	**858**	1.7	81500	16.9	15.0	132-160-180-200	—	—	174900	205400	74700	115000
	314 L4	**926**	1.6	74000	14.2	15.0	132-160-180-200	—	—	179000	210100	76600	115000
	314 L4	**1038**	1.4	82400	14.1	15.0	132-160-180-200	—	—	185200	217400	79600	115000
	314 L4	**1099**	1.4	75800	12.2	15.0	132-160-180-200	—	—	188400	221200	81100	115000
	314 L4	**1277**	1.2	77400	10.8	15.0	132-160-180-200	—	—	197100	231400	85300	115000
	314 L4	**1485**	1.0	66700	8.0	15.0	132-160-180-200	—	—	206000	242100	89700	115000
	314 L4	**1796**	0.84	66800	6.6	15.0	132-160-180-200	—	—	206000	243000	90000	115000
1000	**314 L2**	**17.4**	58	37400	175	48	200-225-250	—	—	61300	72000	23300	115000
	314 L2	**22.3**	45	42200	175	48	200-225-250	—	—	66100	77600	25300	115000
	314 L2	**26.5**	38	42100	175	48	200-225-250	—	—	69600	81700	26800	115000
	314 L2	**28.0**	36	43100	171	48	200-225-250	—	—	70800	83100	27300	115000
	314 L2	**33.2**	30	45300	152	48	200-225-250	—	—	74500	87500	28900	115000
	314 L2	**38.6**	25.9	39600	114	48	200-225-250	—	—	77900	91500	30400	115000
	314 L3	**62.6**	16.0	54900	75	30	160-180-200-225-250	—	—	90100	105800	35700	115000
	314 L3	**73.9**	13.5	57700	75	30	160-180-200-225-250	—	—	94700	111200	37800	115000
	314 L3	**92.7**	10.8	61800	75	30	160-180-200-225-250	—	—	101400	119000	40700	115000
	314 L3	**108**	9.3	64600	69	30	160-180-200-225-250	—	—	106000	124500	42800	115000
	314 L3	**138**	7.2	71400	59	30	160-180-200-225-250	—	—	114300	134200	46500	115000
	314 L3	**164**	6.1	72900	51	30	160-180-200-225-250	—	—	120300	141200	49300	115000
	314 L3	**174**	5.8	64800	43	30	160-180-200-225-250	—	—	122300	143600	50200	115000
	314 L3	**206**	4.9	65600	37	30	160-180-200-225-250	—	—	128800	151200	53200	115000
	314 L3	**240**	4.2	53400	26	30	160-180-200-225-250	—	—	134700	158200	55900	115000

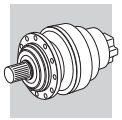

314 L — 372 — 84000 Nm

n_1 min^{-1}		i	n_2 min^{-1}	M_{n2} Nm	P_{n1} kW	P_t kW	P (IEC)	Rn_2 [N] MC	MZ	HC/PC	HZ/PZ	FZ	$M_{2\,max}$ Nm
1000	**314 L4**	**314**	3.2	79200	30	18.0	132-160-180-200	—	—	146100	171600	61200	115000
	314 L4	**388**	2.6	79900	24	18.0	132-160-180-200	—	—	155700	182800	65600	115000
	314 L4	**458**	2.2	80600	21	18.0	132-160-180-200	—	—	163700	192200	69400	115000
	314 L4	**495**	2.0	80900	19.4	18.0	132-160-180-200	—	—	167500	196600	71200	115000
	314 L4	**554**	1.8	81400	17.4	18.0	132-160-180-200	—	—	173300	203500	73900	115000
	314 L4	**588**	1.7	81700	16.4	18.0	132-160-180-200	—	—	176400	207100	75400	115000
	314 L4	**668**	1.5	82200	14.6	18.0	132-160-180-200	—	—	183300	215200	78700	115000
	314 L4	**738**	1.4	82700	13.3	18.0	132-160-180-200	—	—	188800	221700	81300	115000
	314 L4	**858**	1.2	83300	11.5	18.0	132-160-180-200	—	—	197500	231900	85500	115000
	314 L4	**926**	1.1	78300	10.0	18.0	132-160-180-200	—	—	202100	237300	87700	115000
	314 L4	**1038**	0.96	84000	9.6	18.0	132-160-180-200	—	—	206000	243000	90000	115000
	314 L4	**1099**	0.91	79200	8.5	18.0	132-160-180-200	—	—	206000	243000	90000	115000
	314 L4	**1277**	0.78	79200	7.3	18.0	132-160-180-200	—	—	206000	243000	90000	115000
	314 L4	**1485**	0.67	66800	5.3	18.0	132-160-180-200	—	—	206000	243000	90000	115000
	314 L4	**1796**	0.56	66800	4.4	18.0	132-160-180-200	—	—	206000	243000	90000	115000
500	**314 L2**	**17.4**	28.8	46000	147	80	200-225-250	—	—	75500	88700	29400	115000
	314 L2	**22.3**	22.4	52000	130	80	200-225-250	—	—	81400	95600	31900	115000
	314 L2	**26.5**	18.9	51700	109	80	200-225-250	—	—	85700	100600	33800	115000
	314 L2	**28.0**	17.9	52700	105	80	200-225-250	—	—	87100	102300	34400	115000
	314 L2	**33.2**	15.0	55400	93	80	200-225-250	—	—	91700	107700	36500	115000
	314 L2	**38.6**	12.9	48300	70	80	200-225-250	—	—	96000	112700	38300	115000
	314 L3	**62.6**	8.0	67500	62	50	160-180-200-225-250	—	—	110900	130200	45000	115000
	314 L3	**73.9**	6.8	70900	55	50	160-180-200-225-250	—	—	116600	136900	47600	115000
	314 L3	**92.7**	5.4	75900	47	50	160-180-200-225-250	—	—	124800	146500	51300	115000
	314 L3	**108**	4.6	77900	41	50	160-180-200-225-250	—	—	130500	153300	54000	115000
	314 L3	**138**	3.6	78700	33	50	160-180-200-225-250	—	—	140700	165200	58600	115000
	314 L3	**164**	3.0	79300	28	50	160-180-200-225-250	—	—	148100	173900	62100	115000
	314 L3	**174**	2.9	68700	23	50	160-180-200-225-250	—	—	150600	176800	63300	115000
	314 L3	**206**	2.4	69900	19.5	50	160-180-200-225-250	—	—	158500	186100	67000	115000
	314 L3	**240**	2.1	59200	14.2	50	160-180-200-225-250	—	—	165900	194700	70400	115000
	314 L4	**314**	1.6	81900	15.4	30	132-160-180-200	—	—	179900	211200	77100	115000
	314 L4	**388**	1.3	82900	12.6	30	132-160-180-200	—	—	191700	225100	82700	115000
	314 L4	**458**	1.1	83600	10.8	30	132-160-180-200	—	—	201500	236600	87400	115000
	314 L4	**495**	1.0	84000	10.0	30	132-160-180-200	—	—	206000	242100	89700	115000
	314 L4	**554**	0.90	84000	9.0	30	132-160-180-200	—	—	206000	243000	90000	115000
	314 L4	**588**	0.85	84000	8.4	30	132-160-180-200	—	—	206000	243000	90000	115000
	314 L4	**668**	0.75	84000	7.4	30	132-160-180-200	—	—	206000	243000	90000	115000
	314 L4	**738**	0.68	84000	6.7	30	132-160-180-200	—	—	206000	243000	90000	115000
	314 L4	**858**	0.58	84000	5.8	30	132-160-180-200	—	—	206000	243000	90000	115000
	314 L4	**926**	0.54	79200	5.1	30	132-160-180-200	—	—	206000	243000	90000	115000
	314 L4	**1038**	0.48	84000	4.8	30	132-160-180-200	—	—	206000	243000	90000	115000
	314 L4	**1099**	0.46	79200	4.3	30	132-160-180-200	—	—	206000	243000	90000	115000
	314 L4	**1277**	0.39	79200	3.7	30	132-160-180-200	—	—	206000	243000	90000	115000
	314 L4	**1485**	0.34	66800	2.7	30	132-160-180-200	—	—	206000	243000	90000	115000
	314 L4	**1796**	0.28	66800	2.2	30	132-160-180-200	—	—	206000	243000	90000	115000

315 L — 384 — 105000 Nm

n_1 min^{-1}		i	n_2 min^{-1}	M_{n2} Nm	P_{n1} kW	P_t kW	P (IEC)	Rn_2 [N] MC	MZ	HC/PC	HZ/PZ	FZ	$M_{2\,max}$ Nm
1500	**315 L2**	**17.4**	86	41400	200	42	—	—	—	54300	63800	20400	135000
	315 L2	**22.3**	67	46800	200	42	—	—	—	58500	68700	22100	135000
	315 L2	**26.5**	57	46600	200	42	—	—	—	61600	72300	23400	135000
	315 L2	**28.0**	54	47800	200	42	—	—	—	62700	73600	23900	135000
	315 L2	**33.2**	45	50300	200	42	—	—	—	66000	77400	25300	135000
	315 L2	**38.6**	39	44100	190	42	—	—	—	69000	81000	26600	135000

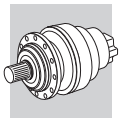

315 L

384

105000 Nm

n_1 min^{-1}		i	n_2 min^{-1}	M_{n2} Nm	P_{n1} kW	P_t kW	P (IEC)	Rn_2 [N] MC	MZ	HC/PC	HZ/PZ	FZ	$M_{2\,max}$ Nm
1500	**315 L3**	**59.6**	25.2	59900	115	30	180-200-225-250	—	—	78600	92300	30700	135000
	315 L3	**71.1**	21.1	63100	115	30	180-200-225-250	—	—	82900	97300	32600	135000
	315 L3	**91.3**	16.4	68000	115	30	180-200-225-250	—	—	89300	104900	35400	135000
	315 L3	**108**	13.8	71600	114	30	180-200-225-250	—	—	94000	110400	37500	135000
	315 L3	**139**	10.8	81100	100	30	180-200-225-250	—	—	101300	119000	40700	135000
	315 L3	**165**	9.1	80400	84	30	180-200-225-250	—	—	106700	125200	43100	135000
	315 L3	**174**	8.6	78800	78	30	180-200-225-250	—	—	108500	127400	43900	135000
	315 L3	**207**	7.2	79800	66	30	180-200-225-250	—	—	114200	134100	46500	135000
	315 L3	**241**	6.2	65000	46	30	180-200-225-250	—	—	119500	140300	48900	135000
	315 L4	**302**	5.0	97000	57	18.0	132-160-180-200	—	—	127900	150200	52800	135000
	315 L4	**370**	4.1	97900	47	18.0	132-160-180-200	—	—	135900	159500	56400	135000
	315 L4	**441**	3.4	98700	40	18.0	132-160-180-200	—	—	143300	168200	59800	135000
	315 L4	**487**	3.1	99100	36	18.0	132-160-180-200	—	—	147600	173300	61800	135000
	315 L4	**533**	2.8	99500	33	18.0	132-160-180-200	—	—	151700	178100	63800	135000
	315 L4	**591**	2.5	99900	30	18.0	132-160-180-200	—	—	156400	183600	66000	135000
	315 L4	**672**	2.2	100600	27	18.0	132-160-180-200	—	—	162500	190800	68900	135000
	315 L4	**741**	2.0	101100	24	18.0	132-160-180-200	—	—	167400	196600	71200	135000
	315 L4	**862**	1.7	101900	21	18.0	132-160-180-200	—	—	175200	205700	74800	135000
	315 L4	**930**	1.6	92600	17.6	18.0	132-160-180-200	—	—	179200	210400	76800	135000
	315 L4	**1043**	1.4	103000	17.5	18.0	132-160-180-200	—	—	185500	217800	79700	135000
	315 L4	**1104**	1.4	94800	15.2	18.0	132-160-180-200	—	—	188700	221500	81300	135000
	315 L4	**1284**	1.2	96900	13.4	18.0	132-160-180-200	—	—	197400	231800	85400	135000
	315 L4	**1492**	1.0	83400	9.9	18.0	132-160-180-200	—	—	206000	242500	89800	135000
	315 L4	**1805**	0.83	83500	8.2	18.0	132-160-180-200	—	—	206000	243000	90000	135000
1000	**315 L2**	**17.4**	58	46700	200	50	—	—	—	61300	72000	23300	135000
	315 L2	**22.3**	45	52700	200	50	—	—	—	66100	77600	25300	135000
	315 L2	**26.5**	38	52600	200	50	—	—	—	69600	81700	26800	135000
	315 L2	**28.0**	36	53800	200	50	—	—	—	70800	83100	27300	135000
	315 L2	**33.2**	30	56600	189	50	—	—	—	74500	87500	28900	135000
	315 L2	**38.6**	25.9	49500	143	50	—	—	—	77900	91500	30400	135000
	315 L3	**59.6**	16.8	67600	115	36	180-200-225-250	—	—	88800	104200	35200	135000
	315 L3	**71.1**	14.1	71300	115	36	180-200-225-250	—	—	93600	109900	37300	135000
	315 L3	**91.3**	11.0	76900	97	36	180-200-225-250	—	—	100900	118400	40500	135000
	315 L3	**108**	9.2	80900	86	36	180-200-225-250	—	—	106200	124700	42900	135000
	315 L3	**139**	7.2	89400	74	36	180-200-225-250	—	—	114400	134400	46600	135000
	315 L3	**165**	6.1	91300	63	36	180-200-225-250	—	—	120500	141500	49400	135000
	315 L3	**174**	5.7	81100	53	36	180-200-225-250	—	—	122500	143800	50300	135000
	315 L3	**207**	4.8	82100	45	36	180-200-225-250	—	—	129000	151400	53200	135000
	315 L3	**241**	4.2	66700	32	36	180-200-225-250	—	—	134900	158400	56000	135000
	315 L4	**302**	3.3	98800	39	22	132-160-180-200	—	—	144500	169600	60400	135000
	315 L4	**370**	2.7	99700	32	22	132-160-180-200	—	—	153500	180200	64600	135000
	315 L4	**441**	2.3	100500	27	22	132-160-180-200	—	—	161800	190000	68500	135000
	315 L4	**487**	2.1	101100	25	22	132-160-180-200	—	—	166700	195700	70800	135000
	315 L4	**533**	1.9	101500	23	22	132-160-180-200	—	—	171300	201100	73000	135000
	315 L4	**591**	1.7	102100	20	22	132-160-180-200	—	—	176600	207400	75500	135000
	315 L4	**672**	1.5	102800	18.1	22	132-160-180-200	—	—	183600	215500	78800	135000
	315 L4	**741**	1.3	103300	16.5	22	132-160-180-200	—	—	189100	222000	81500	135000
	315 L4	**862**	1.2	104200	14.3	22	132-160-180-200	—	—	197800	232300	85700	135000
	315 L4	**930**	1.1	98000	12.5	22	132-160-180-200	—	—	202400	237700	87900	135000
	315 L4	**1043**	0.96	105000	11.9	22	132-160-180-200	—	—	206000	243000	90000	135000
	315 L4	**1104**	0.91	99000	10.6	22	132-160-180-200	—	—	206000	243000	90000	135000
	315 L4	**1284**	0.78	99000	9.1	22	132-160-180-200	—	—	206000	243000	90000	135000
	315 L4	**1492**	0.67	83500	6.6	22	132-160-180-200	—	—	206000	243000	90000	135000
	315 L4	**1805**	0.55	83500	5.5	22	132-160-180-200	—	—	206000	243000	90000	135000
500	**315 L1**	**4.25**	118	40800	260	60	—	—	—	49500	58100	18400	135000
	315 L1	**5.33**	94	40500	260	60	—	—	—	53000	62200	19800	135000
	315 L1	**6.20**	81	35500	260	60	—	—	—	55400	65100	20800	135000

B

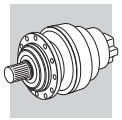

315 L — 384 — 105000 Nm

n_1 min^{-1}		i	n_2 min^{-1}	M_{n2} Nm	P_{n1} kW	P_t kW	P (IEC)	Rn_2 [N] MC	MZ	HC/PC	HZ/PZ	FZ	$M_{2\,max}$ Nm
500	**315 L2**	**17.4**	28.8	57500	184	84	—	—	—	75500	88700	29400	135000
	315 L2	**22.3**	22.4	65000	162	84	—	—	—	81400	95600	31900	135000
	315 L2	**26.5**	18.9	64600	136	84	—	—	—	85700	100600	33800	135000
	315 L2	**28.0**	17.9	65900	131	84	—	—	—	87100	102300	34400	135000
	315 L2	**33.2**	15.0	69200	116	84	—	—	—	91700	107700	36500	135000
	315 L2	**38.6**	12.9	60400	87	84	—	—	—	96000	112700	38300	135000
	315 L3	**59.6**	8.4	83200	80	60	180-200-225-250	—	—	109300	128300	44300	135000
	315 L3	**71.1**	7.0	87700	71	60	180-200-225-250	—	—	115200	135300	47000	135000
	315 L3	**91.3**	5.5	94400	59	60	180-200-225-250	—	—	124200	145800	51100	135000
	315 L3	**108**	4.6	97300	52	60	180-200-225-250	—	—	130700	153500	54100	135000
	315 L3	**139**	3.6	98400	41	60	180-200-225-250	—	—	140900	165400	58700	135000
	315 L3	**165**	3.0	99200	34	60	180-200-225-250	—	—	148300	174100	62200	135000
	315 L3	**174**	2.9	86000	28	60	180-200-225-250	—	—	150800	177100	63400	135000
	315 L3	**207**	2.4	87400	24	60	180-200-225-250	—	—	158800	186400	67100	135000
	315 L3	**241**	2.1	74000	17.6	60	180-200-225-250	—	—	166100	195000	70500	135000
	315 L4	**302**	1.7	102200	20.0	36	132-160-180-200	—	—	177900	208800	76100	135000
	315 L4	**370**	1.4	103300	16.5	36	132-160-180-200	—	—	188900	221800	81400	135000
	315 L4	**441**	1.1	104300	14.0	36	132-160-180-200	—	—	199200	233900	86300	135000
	315 L4	**487**	1.0	104900	12.7	36	132-160-180-200	—	—	205200	240900	89200	135000
	315 L4	**533**	0.94	105000	11.6	36	132-160-180-200	—	—	206000	243000	90000	135000
	315 L4	**591**	0.85	105000	10.5	36	132-160-180-200	—	—	206000	243000	90000	135000
	315 L4	**672**	0.74	105000	9.2	36	132-160-180-200	—	—	206000	243000	90000	135000
	315 L4	**741**	0.67	105000	8.4	36	132-160-180-200	—	—	206000	243000	90000	135000
	315 L4	**862**	0.58	105000	7.2	36	132-160-180-200	—	—	206000	243000	90000	135000
	315 L4	**930**	0.54	99000	6.3	36	132-160-180-200	—	—	206000	243000	90000	135000
	315 L4	**1043**	0.48	105000	6.0	36	132-160-180-200	—	—	206000	243000	90000	135000
	315 L4	**1104**	0.45	99000	5.3	36	132-160-180-200	—	—	206000	243000	90000	135000
	315 L4	**1284**	0.39	99000	4.6	36	132-160-180-200	—	—	206000	243000	90000	135000
	315 L4	**1492**	0.34	83500	3.3	36	132-160-180-200	—	—	206000	243000	90000	135000
	315 L4	**1805**	0.28	83500	2.7	36	132-160-180-200	—	—	206000	243000	90000	135000

316 L — 396 — 138820 Nm

n_1 min^{-1}		i	n_2 min^{-1}	M_{n2} Nm	P_{n1} kW	P_t kW	P (IEC)	Rn_2 [N] MC	MZ	HC/PC	HZ/PZ	FZ	$M_{2\,max}$ Nm
1500	**316 L2**	**17.4**	86	43900	200	50	—	—	—	90300	100400	33900	192000
	316 L2	**22.3**	67	48500	200	50	—	—	—	97300	108200	36900	192000
	316 L2	**26.5**	57	47700	200	50	—	—	—	102500	113900	39100	192000
	316 L3	**59.6**	25.2	63400	115	35	180-200-225-250	—	—	130700	145300	51200	192000
	316 L3	**71.1**	21.1	66900	115	35	180-200-225-250	—	—	137800	153300	54300	192000
	316 L3	**76.5**	19.6	70100	115	35	180-200-225-250	—	—	140800	156600	55600	192000
	316 L3	**91.3**	16.4	72100	115	35	180-200-225-250	—	—	148500	165200	59000	192000
	316 L3	**108**	13.8	75900	115	35	180-200-225-250	—	—	156300	173900	62500	192000
	316 L3	**117**	12.8	79400	115	35	180-200-225-250	—	—	160000	178000	64100	192000
	316 L3	**139**	10.8	81800	101	35	180-200-225-250	—	—	168500	187400	67900	192000
	316 L3	**165**	9.1	82500	86	35	180-200-225-250	—	—	177400	197300	71900	192000
	316 L4	**215**	7.0	93200	60	18.0	132-160-180-200	—	—	191900	213500	78500	192000
	316 L4	**256**	5.9	98200	60	18.0	132-160-180-200	—	—	202400	225100	83200	192000
	316 L4	**302**	5.0	103200	60	18.0	132-160-180-200	—	—	212700	236600	87900	192000
	316 L4	**329**	4.6	105800	57	18.0	132-160-180-200	—	—	218100	242600	90400	192000
	316 L4	**370**	4.1	109400	53	18.0	132-160-180-200	—	—	225900	251300	94000	192000
	316 L4	**441**	3.4	115200	46	18.0	132-160-180-200	—	—	238200	264900	99700	192000
	316 L4	**487**	3.1	118600	43	18.0	132-160-180-200	—	—	245400	272900	103100	192000
	316 L4	**533**	2.8	121800	40	18.0	132-160-180-200	—	—	252200	280500	106300	192000
	316 L4	**566**	2.7	123900	39	18.0	132-160-180-200	—	—	256700	285500	108400	192000
	316 L4	**591**	2.5	122500	37	18.0	132-160-180-200	—	—	260100	289200	110000	192000

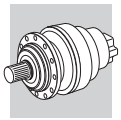

316 L

396

138820 Nm

n_1 min^{-1}		i	n_2 min^{-1}	M_{n2} Nm	P_{n1} kW	P_t kW	P (IEC)	Rn_2 [N] MC	MZ	HC/PC	HZ/PZ	FZ	$M_{2\,max}$ Nm
1500	**316 L4**	**625**	2.4	126500	36	18.0	132-160-180-200	—	—	264500	294100	112000	192000
	316 L4	**685**	2.2	127800	33	18.0	132-160-180-200	—	—	271800	302300	115500	192000
	316 L4	**726**	2.1	128600	31	18.0	132-160-180-200	—	—	276700	307700	117800	192000
	316 L4	**741**	2.0	126500	30	18.0	132-160-180-200	—	—	278400	309600	118600	192000
	316 L4	**812**	1.8	130000	28	18.0	132-160-180-200	—	—	286100	318200	122300	192000
	316 L4	**862**	1.7	129000	27	18.0	132-160-180-200	—	—	291300	323900	124700	192000
	316 L4	**1043**	1.4	132300	23	18.0	132-160-180-200	—	—	308400	343000	132900	192000
	316 L4	**1237**	1.2	122100	17.5	18.0	132-160-180-200	—	—	324600	361100	140700	192000
1000	**316 L2**	**17.4**	58	49500	200	60	—	—	—	102000	113400	38900	192000
	316 L2	**22.3**	45	55000	200	60	—	—	—	109900	122200	42200	192000
	316 L2	**26.5**	38	53800	200	60	—	—	—	115700	128700	44700	192000
	316 L3	**59.6**	16.8	71600	115	42	180-200-225-250	—	—	147600	164100	58600	192000
	316 L3	**71.1**	14.1	75600	115	42	180-200-225-250	—	—	155600	173100	62100	192000
	316 L3	**76.5**	13.1	78900	115	42	180-200-225-250	—	—	159100	176900	63700	192000
	316 L3	**91.3**	11.0	81400	102	42	180-200-225-250	—	—	167700	186500	67500	192000
	316 L3	**108**	9.2	85700	91	42	180-200-225-250	—	—	176600	196400	71500	192000
	316 L3	**117**	8.5	89800	88	42	180-200-225-250	—	—	180800	201000	73400	192000
	316 L3	**139**	7.2	92400	76	42	180-200-225-250	—	—	190300	211600	77700	192000
	316 L3	**165**	6.1	93100	65	42	180-200-225-250	—	—	200300	222800	82300	192000
	316 L4	**215**	4.7	105100	58	22	132-160-180-200	—	—	216700	241100	89800	192000
	316 L4	**256**	3.9	110700	51	22	132-160-180-200	—	—	228500	254200	95300	192000
	316 L4	**302**	3.3	116100	45	22	132-160-180-200	—	—	240200	267200	100700	192000
	316 L4	**329**	3.0	119000	43	22	132-160-180-200	—	—	246300	273900	103500	192000
	316 L4	**370**	2.7	123100	39	22	132-160-180-200	—	—	255100	283800	107600	192000
	316 L4	**441**	2.3	127300	34	22	132-160-180-200	—	—	269000	299200	114200	192000
	316 L4	**487**	2.1	128600	31	22	132-160-180-200	—	—	277100	308200	118000	192000
	316 L4	**533**	1.9	129900	29	22	132-160-180-200	—	—	284800	316800	121700	192000
	316 L4	**566**	1.8	130700	27	22	132-160-180-200	—	—	289900	322500	124100	192000
	316 L4	**591**	1.7	129500	26	22	132-160-180-200	—	—	293700	326600	125900	192000
	316 L4	**625**	1.6	132100	25	22	132-160-180-200	—	—	298700	332200	128200	192000
	316 L4	**685**	1.5	133400	23	22	132-160-180-200	—	—	307000	341400	132200	192000
	316 L4	**726**	1.4	134200	22	22	132-160-180-200	—	—	312500	347500	134800	192000
	316 L4	**741**	1.3	133400	21	22	132-160-180-200	—	—	314400	349700	135800	192000
	316 L4	**812**	1.2	135800	19.8	22	132-160-180-200	—	—	323200	359400	140000	192000
	316 L4	**862**	1.2	136100	18.7	22	132-160-180-200	—	—	328900	365800	142800	192000
	316 L4	**1043**	0.96	138800	15.7	22	132-160-180-200	—	—	345000	385000	150000	192000
	316 L4	**1237**	0.81	124000	11.9	22	132-160-180-200	—	—	345000	385000	150000	192000
500	**316 L2**	**17.4**	28.8	60900	195	100	—	—	—	125600	139600	49000	192000
	316 L2	**22.3**	22.4	67400	168	100	—	—	—	135300	150500	53200	192000
	316 L2	**26.5**	18.9	66200	139	100	—	—	—	142400	158400	56300	192000
	316 L3	**59.6**	8.4	88200	85	70	180-200-225-250	—	—	181700	202100	73800	192000
	316 L3	**71.1**	7.0	93000	75	70	180-200-225-250	—	—	191600	213100	78300	192000
	316 L3	**76.5**	6.5	98000	74	70	180-200-225-250	—	—	195800	217800	80200	192000
	316 L3	**91.3**	5.5	100200	63	70	180-200-225-250	—	—	206500	229600	85100	192000
	316 L3	**108**	4.6	105400	56	70	180-200-225-250	—	—	217400	241800	90100	192000
	316 L3	**117**	4.3	111100	54	70	180-200-225-250	—	—	222500	247500	92500	192000
	316 L3	**139**	3.6	112100	46	70	180-200-225-250	—	—	234300	260500	97900	192000
	316 L3	**165**	3.0	110200	38	70	180-200-225-250	—	—	246600	274300	103700	192000
	316 L4	**215**	2.3	126900	35	36	132-160-180-200	—	—	266800	296800	113100	192000
	316 L4	**256**	2.0	129300	30	36	132-160-180-200	—	—	281400	312900	120000	192000
	316 L4	**302**	1.7	131600	26	36	132-160-180-200	—	—	295700	328900	126800	192000
	316 L4	**329**	1.5	132800	24	36	132-160-180-200	—	—	303200	337200	130400	192000
	316 L4	**370**	1.4	134500	22	36	132-160-180-200	—	—	314100	349300	135600	192000
	316 L4	**441**	1.1	137000	18.4	36	132-160-180-200	—	—	331200	368400	143800	192000
	316 L4	**487**	1.0	138400	16.8	36	132-160-180-200	—	—	341200	379500	148700	192000
	316 L4	**533**	0.94	138800	15.4	36	132-160-180-200	—	—	345000	385000	150000	192000
	316 L4	**566**	0.88	138800	14.5	36	132-160-180-200	—	—	345000	385000	150000	192000

B

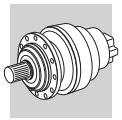

316 L

396

138820 Nm

n_1 min^{-1}		i	n_2 min^{-1}	M_{n2} Nm	P_{n1} kW	P_t kW	P (IEC)	Rn_2 [N] MC	MZ	HC/PC	HZ/PZ	FZ	$M_{2\,max}$ Nm
500	**316 L4**	**591**	0.85	138800	13.9	36	132-160-180-200	—	—	345000	385000	150000	192000
	316 L4	**625**	0.80	138800	13.1	36	132-160-180-200	—	—	345000	385000	150000	192000
	316 L4	**685**	0.73	138800	12.0	36	132-160-180-200	—	—	345000	385000	150000	192000
	316 L4	**726**	0.69	138800	11.3	36	132-160-180-200	—	—	345000	385000	150000	192000
	316 L4	**741**	0.67	138800	11.1	36	132-160-180-200	—	—	345000	385000	150000	192000
	316 L4	**812**	0.62	138800	10.1	36	132-160-180-200	—	—	345000	385000	150000	192000
	316 L4	**862**	0.58	138800	9.5	36	132-160-180-200	—	—	345000	385000	150000	192000
	316 L4	**1043**	0.48	138800	7.9	36	132-160-180-200	—	—	345000	385000	150000	192000
	316 L4	**1237**	0.40	124000	5.9	36	132-160-180-200	—	—	345000	385000	150000	192000

B

317 L

406

208110 Nm

n_1 min^{-1}		i	n_2 min^{-1}	M_{n2} Nm	P_{n1} kW	P_t kW	P (IEC)	Rn_2 [N] MC	MZ	HC/PC	HZ/PZ	FZ	$M_{2\,max}$ Nm
1500	**317 L3**	**58.1**	25.8	90300	150	35	180-200-225-250	—	—	166800	177500	50800	393000
	317 L3	**69.3**	21.6	93300	150	35	180-200-225-250	—	—	175800	187200	53800	393000
	317 L3	**89.0**	16.9	101000	150	35	180-200-225-250	—	—	189500	201800	58500	393000
	317 L3	**106**	14.2	105800	150	35	180-200-225-250	—	—	199500	212400	61900	393000
	317 L3	**116**	12.9	108300	150	35	180-200-225-250	—	—	205200	218400	63900	393000
	317 L3	**138**	10.9	114000	143	35	180-200-225-250	—	—	216000	230000	67700	393000
	317 L3	**166**	9.1	120500	125	35	180-200-225-250	—	—	228300	243100	72000	393000
	317 L3	**179**	8.4	136600	131	35	180-200-225-250	—	—	233800	248900	73900	393000
	317 L3	**213**	7.1	142200	115	35	180-200-225-250	—	—	246100	262000	78200	393000
	317 L3	**252**	5.9	119700	82	35	180-200-225-250	—	—	259100	275800	82800	393000
	317 L4	**310**	4.8	146200	60	18.0	132-160-180-200	—	—	275500	293400	88700	393000
	317 L4	**360**	4.2	152900	60	18.0	132-160-180-200	—	—	288300	306900	93200	393000
	317 L4	**449**	3.3	163300	60	18.0	132-160-180-200	—	—	307900	327800	100300	393000
	317 L4	**493**	3.0	166900	60	18.0	132-160-180-200	—	—	316700	337200	103500	393000
	317 L4	**552**	2.7	174500	56	18.0	132-160-180-200	—	—	327600	348800	107500	393000
	317 L4	**619**	2.4	177200	51	18.0	132-160-180-200	—	—	339000	361000	111600	393000
	317 L4	**719**	2.1	178400	44	18.0	132-160-180-200	—	—	354700	377600	117400	393000
	317 L4	**792**	1.9	186500	42	18.0	132-160-180-200	—	—	365100	388700	121200	393000
	317 L4	**904**	1.7	166600	33	18.0	132-160-180-200	—	—	379800	404400	126700	393000
	317 L4	**1032**	1.5	181300	31	18.0	132-160-180-200	—	—	395300	420900	132400	393000
	317 L4	**1134**	1.3	168100	26	18.0	132-160-180-200	—	—	406600	432900	136600	393000
	317 L4	**1318**	1.1	169100	23	18.0	132-160-180-200	—	—	425400	452900	143700	393000
	317 L4	**1595**	0.94	170000	18.9	18.0	132-160-180-200	—	—	442000	470000	150000	393000
	317 L4	**1893**	0.79	156200	14.6	18.0	132-160-180-200	—	—	442000	470000	150000	393000
1000	**317 L3**	**58.1**	17.2	101900	150	42	180-200-225-250	—	—	188300	200500	58100	393000
	317 L3	**69.3**	14.4	105300	150	42	180-200-225-250	—	—	198600	211400	61600	393000
	317 L3	**89.0**	11.2	114000	147	42	180-200-225-250	—	—	214000	227800	67000	393000
	317 L3	**106**	9.5	119500	130	42	180-200-225-250	—	—	225300	239900	70900	393000
	317 L3	**116**	8.6	122300	121	42	180-200-225-250	—	—	231700	246700	73200	393000
	317 L3	**138**	7.3	128800	107	42	180-200-225-250	—	—	243900	259700	77400	393000
	317 L3	**166**	6.0	136100	94	42	180-200-225-250	—	—	257900	274600	82400	393000
	317 L3	**179**	5.6	150100	96	42	180-200-225-250	—	—	264000	281100	84600	393000
	317 L3	**213**	4.7	154900	84	42	180-200-225-250	—	—	277900	295900	89500	393000
	317 L3	**252**	4.0	124600	57	42	180-200-225-250	—	—	292600	311500	94800	393000
	317 L4	**310**	3.2	165100	60	22	132-160-180-200	—	—	311200	331300	101500	393000
	317 L4	**360**	2.8	172700	57	22	132-160-180-200	—	—	325600	346600	106700	393000
	317 L4	**449**	2.2	181600	48	22	132-160-180-200	—	—	347700	370200	114800	393000
	317 L4	**493**	2.0	178600	43	22	132-160-180-200	—	—	357700	380800	118500	393000
	317 L4	**552**	1.8	188400	40	22	132-160-180-200	—	—	369900	393900	123000	393000
	317 L4	**619**	1.6	180400	35	22	132-160-180-200	—	—	382900	407600	127800	393000
	317 L4	**719**	1.4	181600	30	22	132-160-180-200	—	—	400600	426500	134400	393000
	317 L4	**792**	1.3	199300	30	22	132-160-180-200	—	—	412300	439000	138800	393000
	317 L4	**904**	1.1	169300	22	22	132-160-180-200	—	—	429000	456700	145000	393000
	317 L4	**1032**	0.97	184300	21	22	132-160-180-200	—	—	442000	470000	150000	393000

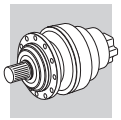

317 L

406

208110 Nm

n_1 min^{-1}		i	n_2 min^{-1}	M_{n2} Nm	P_{n1} kW	P_t kW	P (IEC)	Rn_2 [N] MC	MZ	HC/PC	HZ/PZ	FZ	$M_{2\,max}$ Nm
1000	**317 L4**	**1134**	0.88	170000	17.7	22	132-160-180-200	—	—	442000	470000	150000	393000
	317 L4	**1318**	0.76	170000	15.3	22	132-160-180-200	—	—	442000	470000	150000	393000
	317 L4	**1595**	0.63	170000	12.6	22	132-160-180-200	—	—	442000	470000	150000	393000
	317 L4	**1893**	0.53	156200	9.8	22	132-160-180-200	—	—	442000	470000	150000	393000
500	**317 L2**	**16.9**	29.5	86700	250	116	—	—	—	160200	170600	48500	393000
	317 L2	**22.1**	22.6	91400	230	116	—	—	—	173500	184700	53000	393000
	317 L2	**26.6**	18.8	96700	202	116	—	—	—	183400	195300	56400	393000
	317 L2	**28.4**	17.6	110500	217	116	—	—	—	186900	199000	57600	393000
	317 L2	**34.1**	14.7	116800	191	116	—	—	—	197600	210400	61300	393000
	317 L2	**40.5**	12.3	112800	155	116	—	—	—	208100	221500	64900	393000
	317 L3	**58.1**	8.6	125400	124	70	180-200-225-250	—	—	231900	246900	73200	393000
	317 L3	**69.3**	7.2	129700	107	70	180-200-225-250	—	—	244500	260300	77600	393000
	317 L3	**89.0**	5.6	140100	90	70	180-200-225-250	—	—	263500	280500	84400	393000
	317 L3	**106**	4.7	147100	80	70	180-200-225-250	—	—	277400	295300	89300	393000
	317 L3	**116**	4.3	150500	74	70	180-200-225-250	—	—	285300	303700	92200	393000
	317 L3	**138**	3.6	158400	66	70	180-200-225-250	—	—	300300	319700	97600	393000
	317 L3	**166**	3.0	151900	53	70	180-200-225-250	—	—	317500	338000	103800	393000
	317 L3	**179**	2.8	162300	52	70	180-200-225-250	—	—	325000	346100	106500	393000
	317 L3	**213**	2.4	164400	44	70	180-200-225-250	—	—	342200	364300	112800	393000
	317 L3	**252**	2.0	139600	32	70	180-200-225-250	—	—	360200	383500	119400	393000
	317 L4	**310**	1.6	191500	37	36	132-160-180-200	—	—	383100	407900	127900	393000
	317 L4	**360**	1.4	196200	32	36	132-160-180-200	—	—	400800	426700	134500	393000
	317 L4	**449**	1.1	203400	27	36	132-160-180-200	—	—	428100	455800	144700	393000
	317 L4	**493**	1.0	184200	22	36	132-160-180-200	—	—	440300	468800	149300	393000
	317 L4	**552**	0.91	207100	22	36	132-160-180-200	—	—	442000	470000	150000	393000
	317 L4	**619**	0.81	184300	17.6	36	132-160-180-200	—	—	442000	470000	150000	393000
	317 L4	**719**	0.70	184300	15.2	36	132-160-180-200	—	—	442000	470000	150000	393000
	317 L4	**792**	0.63	207100	15.5	36	132-160-180-200	—	—	442000	470000	150000	393000
	317 L4	**904**	0.55	170000	11.1	36	132-160-180-200	—	—	442000	470000	150000	393000
	317 L4	**1032**	0.48	184300	10.6	36	132-160-180-200	—	—	442000	470000	150000	393000
	317 L4	**1134**	0.44	170000	8.9	36	132-160-180-200	—	—	442000	470000	150000	393000
	317 L4	**1318**	0.38	170000	7.6	36	132-160-180-200	—	—	442000	470000	150000	393000
	317 L4	**1595**	0.31	170000	6.3	36	132-160-180-200	—	—	442000	470000	150000	393000
	317 L4	**1893**	0.26	156200	4.9	36	132-160-180-200	—	—	442000	470000	150000	393000

318 L

416

280580 Nm

n_1 min^{-1}		i	n_2 min^{-1}	M_{n2} Nm	P_{n1} kW	P_t kW	P (IEC)	Rn_2 [N] MC	MZ	HC/PC	HZ/PZ	FZ	$M_{2\,max}$ Nm
1500	**318 L3**	**76.5**	19.6	144900	200	40	—	—	—	227200	231900	74200	500000
	318 L3	**98.2**	15.3	156100	200	40	—	—	—	244900	249900	80600	500000
	318 L3	**117**	12.9	164400	200	40	—	—	—	257800	263100	85300	500000
	318 L3	**123**	12.2	167200	200	40	—	—	—	262100	267500	86900	500000
	318 L3	**146**	10.3	176000	200	40	—	—	—	275900	281600	92000	500000
	318 L3	**170**	8.8	184100	186	40	—	—	—	288700	294600	96800	500000
	318 L4	**262**	5.7	209700	115	22	180-200-225-250	—	—	328800	335600	111800	500000
	318 L4	**313**	4.8	220800	115	22	180-200-225-250	—	—	346700	353800	118600	500000
	318 L4	**337**	4.5	225200	115	22	180-200-225-250	—	—	354400	361600	121500	500000
	318 L4	**402**	3.7	236100	104	22	180-200-225-250	—	—	373600	381300	128900	500000
	318 L4	**422**	3.6	239300	101	22	180-200-225-250	—	—	379300	387100	131100	500000
	318 L4	**477**	3.1	247200	92	22	180-200-225-250	—	—	393300	401400	136500	500000
	318 L4	**515**	2.9	252500	87	22	180-200-225-250	—	—	402700	410900	140100	500000
	318 L4	**612**	2.5	263300	76	22	180-200-225-250	—	—	423900	432600	148300	500000
	318 L4	**647**	2.3	264400	73	22	180-200-225-250	—	—	431100	439900	151100	500000
	318 L4	**726**	2.1	266600	65	22	180-200-225-250	—	—	446300	455400	157000	500000
	318 L4	**768**	2.0	267600	62	22	180-200-225-250	—	—	453800	463100	160000	500000
	318 L4	**911**	1.6	270900	53	22	180-200-225-250	—	—	477700	487500	169400	500000
	318 L4	**1059**	1.4	273800	46	22	180-200-225-250	—	—	499800	510000	178100	500000

B

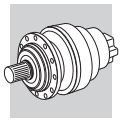

318 L — 416 — 280580 Nm

n_1 min^{-1}		i	n_2 min^{-1}	M_{n2} Nm	P_{n1} kW	P_t kW	P (IEC)	Rn_2 [N] MC	MZ	HC/PC	HZ/PZ	FZ	$M_{2\,max}$ Nm
1000	**318 L3**	**76.5**	13.1	163600	200	48	—	—	—	256600	261900	84900	500000
	318 L3	**98.2**	10.2	176300	200	48	—	—	—	276500	282200	92300	500000
	318 L3	**117**	8.6	185600	183	48	—	—	—	291100	297100	97700	500000
	318 L3	**123**	8.1	188800	176	48	—	—	—	296000	302100	99500	500000
	318 L3	**146**	6.8	198700	156	48	—	—	—	311600	318000	105400	500000
	318 L3	**170**	5.9	207900	140	48	—	—	—	326000	332700	110800	500000
	318 L4	**262**	3.8	234800	106	26	180-200-225-250	—	—	371300	379000	128000	500000
	318 L4	**313**	3.2	246200	93	26	180-200-225-250	—	—	391500	399600	135800	500000
	318 L4	**337**	3.0	251100	88	26	180-200-225-250	—	—	400200	408400	139100	500000
	318 L4	**402**	2.5	263100	77	26	180-200-225-250	—	—	422000	430600	147600	500000
	318 L4	**422**	2.4	264000	74	26	180-200-225-250	—	—	428400	437200	150100	500000
	318 L4	**477**	2.1	266300	66	26	180-200-225-250	—	—	444200	453300	156200	500000
	318 L4	**515**	1.9	267700	61	26	180-200-225-250	—	—	454800	464100	160400	500000
	318 L4	**612**	1.6	271000	52	26	180-200-225-250	—	—	478700	488600	169800	500000
	318 L4	**647**	1.5	272100	50	26	180-200-225-250	—	—	486800	496800	173000	500000
	318 L4	**726**	1.4	274300	45	26	180-200-225-250	—	—	503000	514300	179800	500000
	318 L4	**768**	1.3	275400	42	26	180-200-225-250	—	—	503000	523000	183100	500000
	318 L4	**911**	1.1	278700	36	26	180-200-225-250	—	—	503000	550600	193900	500000
	318 L4	**1059**	0.94	280600	31	26	180-200-225-250	—	—	503000	565000	200000	500000
500	**318 L2**	**18.7**	26.7	132000	260	63	—	—	—	207000	211300	66900	500000
	318 L2	**23.5**	21.3	141300	260	63	—	—	—	221600	226200	72100	500000
	318 L2	**27.3**	18.3	147800	260	63	—	—	—	231800	236600	75900	500000
	318 L3	**76.5**	6.5	201500	151	80	—	—	—	315900	322400	107000	500000
	318 L3	**98.2**	5.1	217100	127	80	—	—	—	340400	347400	116200	500000
	318 L3	**117**	4.3	227500	112	80	—	—	—	358400	365700	123100	500000
	318 L3	**123**	4.1	230900	108	80	—	—	—	364400	371900	125400	500000
	318 L3	**146**	3.4	241800	95	80	—	—	—	383700	391500	132800	500000
	318 L3	**170**	2.9	251700	85	80	—	—	—	401400	409600	139600	500000
	318 L4	**262**	1.9	268100	60	44	180-200-225-250	—	—	457200	466600	161300	500000
	318 L4	**313**	1.6	271400	51	44	180-200-225-250	—	—	482000	491900	171100	500000
	318 L4	**337**	1.5	272800	48	44	180-200-225-250	—	—	492700	502800	175300	500000
	318 L4	**402**	1.2	276300	41	44	180-200-225-250	—	—	503000	530200	185900	500000
	318 L4	**422**	1.2	277300	39	44	180-200-225-250	—	—	503000	538200	189100	500000
	318 L4	**477**	1.0	279600	35	44	180-200-225-250	—	—	503000	558100	196800	500000
	318 L4	**515**	0.97	280600	32	44	180-200-225-250	—	—	503000	565000	200000	500000
	318 L4	**612**	0.82	280600	27	44	180-200-225-250	—	—	503000	565000	200000	500000
	318 L4	**647**	0.77	280600	26	44	180-200-225-250	—	—	503000	565000	200000	500000
	318 L4	**726**	0.69	280600	23	44	180-200-225-250	—	—	503000	565000	200000	500000
	318 L4	**768**	0.65	280600	22	44	180-200-225-250	—	—	503000	565000	200000	500000
	318 L4	**911**	0.55	280600	18.2	44	180-200-225-250	—	—	503000	565000	200000	500000
	318 L4	**1059**	0.47	280600	15.7	44	180-200-225-250	—	—	503000	565000	200000	500000

319 L — 426 — 476410 Nm

n_1 min^{-1}		i	n_2 min^{-1}	M_{n2} Nm	P_{n1} kW	P_t kW	P (IEC)	Rn_2 [N] MC	MZ	HC/PC	HZ/PZ	FZ	$M_{2\,max}$ Nm
1500	**319 L3**	**84.8**	17.7	195400	200	50	—	—	—	269300	296700	76700	680000
	319 L3	**109**	13.8	222400	200	50	—	—	—	290200	319800	83400	680000
	319 L3	**129**	11.6	220800	200	50	—	—	—	305500	336600	88300	680000
	319 L3	**137**	11.0	226500	200	50	—	—	—	310700	342300	90000	680000
	319 L3	**162**	9.3	250300	200	50	—	—	—	326800	360000	95200	680000
	319 L3	**188**	8.0	209800	192	50	—	—	—	342200	377000	100100	680000
	319 L3	**223**	6.7	246100	190	50	—	—	—	359900	396500	105900	680000

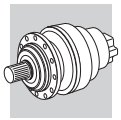

319 L

426

476410 Nm

n_1 min^{-1}		i	n_2 min^{-1}	M_{n2} Nm	P_{n1} kW	P_t kW	P (IEC)	Rn_2 [N] MC	MZ	HC/PC	HZ/PZ	FZ	$M_{2\,max}$ Nm
1500	**319 L4**	**347**	4.3	298000	115	30	180-200-225-250	—	—	410900	452700	122700	680000
	319 L4	**445**	3.4	319800	115	30	180-200-225-250	—	—	442900	487900	133400	680000
	319 L4	**528**	2.8	335700	113	30	180-200-225-250	—	—	466200	513700	141200	680000
	319 L4	**571**	2.6	344400	107	30	180-200-225-250	—	—	477300	525800	145000	680000
	319 L4	**678**	2.2	354900	93	30	180-200-225-250	—	—	502400	553600	153500	680000
	319 L4	**717**	2.1	355800	88	30	180-200-225-250	—	—	510900	562900	156300	680000
	319 L4	**850**	1.8	363400	76	30	180-200-225-250	—	—	537900	592600	165500	680000
	319 L4	**912**	1.6	336100	65	30	180-200-225-250	—	—	549200	605100	169400	680000
	319 L4	**1007**	1.5	344900	61	30	180-200-225-250	—	—	565700	623300	175100	680000
	319 L4	**1195**	1.3	354500	53	30	180-200-225-250	—	—	595600	656200	185400	680000
	319 L4	**1389**	1.1	355900	45	30	180-200-225-250	—	—	623100	686500	194900	680000
1000	**319 L3**	**84.8**	11.8	220700	200	60	—	—	—	304100	335100	87900	680000
	319 L3	**109**	9.2	251200	200	60	—	—	—	327800	361100	95500	680000
	319 L3	**129**	7.7	249300	200	60	—	—	—	345000	380100	101100	680000
	319 L3	**137**	7.3	255500	200	60	—	—	—	350900	386600	103000	680000
	319 L3	**162**	6.2	263500	187	60	—	—	—	369000	406600	108900	680000
	319 L3	**188**	5.3	236700	144	60	—	—	—	386400	425800	114600	680000
	319 L3	**223**	4.5	274900	141	60	—	—	—	406500	447800	121300	680000
	319 L4	**347**	2.9	334200	114	36	180-200-225-250	—	—	464100	511300	140500	680000
	319 L4	**445**	2.2	354100	94	36	180-200-225-250	—	—	500200	551000	152700	680000
	319 L4	**528**	1.9	364000	82	36	180-200-225-250	—	—	526500	580100	161700	680000
	319 L4	**571**	1.8	368700	76	36	180-200-225-250	—	—	539000	593900	165900	680000
	319 L4	**678**	1.5	379100	66	36	180-200-225-250	—	—	567400	625200	175700	680000
	319 L4	**717**	1.4	374100	62	36	180-200-225-250	—	—	577000	635700	179000	680000
	319 L4	**850**	1.2	382200	53	36	180-200-225-250	—	—	607400	669200	189500	680000
	319 L4	**912**	1.1	355200	46	36	180-200-225-250	—	—	620200	683400	193900	680000
	319 L4	**1007**	0.99	367600	43	36	180-200-225-250	—	—	638000	702000	200000	680000
	319 L4	**1195**	0.84	367600	36	36	180-200-225-250	—	—	638000	702000	200000	680000
	319 L4	**1389**	0.72	359700	31	36	180-200-225-250	—	—	638000	702000	200000	680000
500	**319 L2**	**20.7**	24.1	191800	260	70	—	—	—	245400	270300	69200	680000
	319 L2	**24.5**	20.4	200300	260	70	—	—	—	258100	284300	73200	680000
	319 L2	**26.0**	19.2	191600	260	70	—	—	—	262700	289400	74700	680000
	319 L2	**30.2**	16.5	168600	260	70	—	—	—	274800	302800	78500	680000
	319 L2	**35.8**	14.0	199000	260	70	—	—	—	289000	318500	83000	680000
	319 L3	**84.8**	5.9	272100	184	100	—	—	—	374400	412500	110700	680000
	319 L3	**109**	4.6	306300	162	100	—	—	—	403500	444600	120300	680000
	319 L3	**129**	3.9	306100	136	100	—	—	—	424800	468000	127400	680000
	319 L3	**137**	3.7	312300	131	100	—	—	—	432000	475900	129700	680000
	319 L3	**162**	3.1	302300	107	100	—	—	—	454400	500600	137200	680000
	319 L3	**188**	2.7	290800	89	100	—	—	—	475800	524200	144400	680000
	319 L3	**223**	2.2	322300	83	100	—	—	—	500400	551300	152800	680000
	319 L4	**347**	1.4	380500	65	60	180-200-225-250	—	—	571400	629500	177000	680000
	319 L4	**445**	1.1	396200	53	60	180-200-225-250	—	—	615800	678400	192400	680000
	319 L4	**528**	0.95	403700	45	60	180-200-225-250	—	—	638000	702000	200000	680000
	319 L4	**571**	0.88	403700	42	60	180-200-225-250	—	—	638000	702000	200000	680000
	319 L4	**678**	0.74	403700	35	60	180-200-225-250	—	—	638000	702000	200000	680000
	319 L4	**717**	0.70	389900	32	60	180-200-225-250	—	—	638000	702000	200000	680000
	319 L4	**850**	0.59	389900	27	60	180-200-225-250	—	—	638000	702000	200000	680000
	319 L4	**912**	0.55	359700	23	60	180-200-225-250	—	—	638000	702000	200000	680000
	319 L4	**1007**	0.50	367600	22	60	180-200-225-250	—	—	638000	702000	200000	680000
	319 L4	**1195**	0.42	367600	18.2	60	180-200-225-250	—	—	638000	702000	200000	680000
	319 L4	**1389**	0.36	359700	15.3	60	180-200-225-250	—	—	638000	702000	200000	680000

B

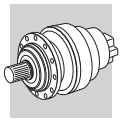

321 L

436

655740 Nm

n_1 min^{-1}		i	n_2 min^{-1}	M_{n2} Nm	P_{n1} kW	P_t kW	P (IEC)	Rn_2 [N] MC	MZ	HC/PC	HZ/PZ	FZ	$M_{2\,max}$ Nm
1500	**321 L4**	**258**	5.8	401700	150	35	180-200-225-250	—	—	461500	547200	667600	934000
	321 L4	**308**	4.9	423600	150	35	180-200-225-250	—	—	486600	577000	708100	934000
	321 L4	**395**	3.8	456500	150	35	180-200-225-250	—	—	524400	621900	769500	934000
	321 L4	**469**	3.2	480500	150	35	180-200-225-250	—	—	552000	654600	814700	934000
	321 L4	**515**	2.9	494200	150	35	180-200-225-250	—	—	567800	673300	840500	934000
	321 L4	**612**	2.5	519900	150	35	180-200-225-250	—	—	597700	708800	889900	934000
	321 L4	**736**	2.0	545400	131	35	180-200-225-250	—	—	631900	749400	946600	934000
	321 L4	**796**	1.9	556600	124	35	180-200-225-250	—	—	646900	767100	971600	934000
	321 L4	**945**	1.6	581800	109	35	180-200-225-250	—	—	681000	807600	1028700	934000
	321 L4	**1122**	1.3	530200	84	35	180-200-225-250	—	—	716900	850200	1089200	934000
1000	**321 L3**	**75.3**	13.3	313500	250	60	—	—	—	360100	427000	506800	934000
	321 L3	**98.2**	10.2	339400	250	60	—	—	—	389900	462400	553600	934000
	321 L3	**118**	8.5	358800	250	60	—	—	—	412200	488800	588900	934000
	321 L3	**126**	7.9	365800	250	60	—	—	—	420200	498300	601600	934000
	321 L3	**152**	6.6	386700	250	60	—	—	—	444200	526800	639900	934000
	321 L3	**180**	5.6	407100	250	60	—	—	—	467700	554600	677500	934000
	321 L4	**258**	3.9	453700	150	42	180-200-225-250	—	—	521200	618000	764200	934000
	321 L4	**308**	3.2	478300	150	42	180-200-225-250	—	—	549500	651700	810500	934000
	321 L4	**395**	2.5	515500	150	42	180-200-225-250	—	—	592200	702300	880800	934000
	321 L4	**469**	2.1	539100	136	42	180-200-225-250	—	—	623400	739300	932600	934000
	321 L4	**515**	1.9	552400	127	42	180-200-225-250	—	—	641200	760400	962200	934000
	321 L4	**612**	1.6	577400	112	42	180-200-225-250	—	—	675000	800500	1018700	934000
	321 L4	**736**	1.4	605800	97	42	180-200-225-250	—	—	713600	846300	1083600	934000
	321 L4	**796**	1.3	618200	92	42	180-200-225-250	—	—	730600	866400	1112200	934000
	321 L4	**945**	1.1	646200	81	42	180-200-225-250	—	—	769100	912000	1177600	934000
	321 L4	**1122**	0.89	536400	57	42	180-200-225-250	—	—	779000	923000	1200000	934000
500	**321 L3**	**75.3**	6.6	385900	250	127	—	—	—	443300	525700	638500	934000
	321 L3	**98.2**	5.1	417900	244	127	—	—	—	480000	569300	697500	934000
	321 L3	**118**	4.2	441800	214	127	—	—	—	507500	601800	742000	934000
	321 L3	**126**	4.0	450300	205	127	—	—	—	517300	613500	758000	934000
	321 L3	**152**	3.3	476100	180	127	—	—	—	546900	648600	806300	934000
	321 L3	**180**	2.8	501200	160	127	—	—	—	575800	682800	853700	934000
	321 L4	**258**	1.9	552700	127	70	180-200-225-250	—	—	641600	760900	962800	934000
	321 L4	**308**	1.6	578500	111	70	180-200-225-250	—	—	676500	802300	1021200	934000
	321 L4	**395**	1.3	617100	92	70	180-200-225-250	—	—	729100	864600	1109700	934000
	321 L4	**469**	1.1	645100	81	70	180-200-225-250	—	—	767500	910200	1174900	934000
	321 L4	**515**	0.97	655700	75	70	180-200-225-250	—	—	779000	923000	1200000	934000
	321 L4	**612**	0.82	655700	63	70	180-200-225-250	—	—	779000	923000	1200000	934000
	321 L4	**736**	0.68	655700	53	70	180-200-225-250	—	—	779000	923000	1200000	934000
	321 L4	**796**	0.63	655700	49	70	180-200-225-250	—	—	779000	923000	1200000	934000
	321 L4	**945**	0.53	655700	41	70	180-200-225-250	—	—	779000	923000	1200000	934000
	321 L4	**1122**	0.45	536400	28	70	180-200-225-250	—	—	779000	923000	1200000	934000

323 L

446

890310 Nm

n_1 min^{-1}		i	n_2 min^{-1}	M_{n2} Nm	P_{n1} kW	P_t kW	P (IEC)	Rn_2 [N] MC	MZ	HC/PC	HZ/PZ	FZ	$M_{2\,max}$ Nm
1500	**323 L4**	**341**	4.4	757500	200	50	—	—	—	—	—	671300	1580000
	323 L4	**390**	3.8	774100	200	50	—	—	—	—	—	702000	1580000
	323 L4	**438**	3.4	788700	200	50	—	—	—	—	—	729500	1580000
	323 L4	**500**	3.0	806000	200	50	—	—	—	—	—	762900	1580000
	323 L4	**569**	2.6	822800	200	50	—	—	—	—	—	796200	1580000
	323 L4	**628**	2.4	832800	200	50	—	—	—	—	—	822900	1580000
	323 L4	**703**	2.1	840100	200	50	—	—	—	—	—	854300	1580000
	323 L4	**758**	2.0	844900	198	50	—	—	—	—	—	876000	1580000
	323 L4	**882**	1.7	854800	172	50	—	—	—	—	—	921500	1580000
	323 L4	**1025**	1.5	864700	150	50	—	—	—	—	—	968900	1580000
	323 L4	**1101**	1.4	869400	140	50	—	—	—	—	—	992100	1580000

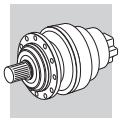

323 L

446

890310 Nm

n_1 min^{-1}		i	n_2 min^{-1}	M_{n2} Nm	P_{n1} kW	P_t kW	P (IEC)	Rn_2 [N] MC	MZ	HC/PC	HZ/PZ	FZ	$M_{2\,max}$ Nm
1000	**323 L4**	**1279**	1.2	879500	122	50	—	—	—	—	—	1043200	1580000
	323 L4	**341**	2.9	808800	200	60	—	—	—	—	—	768500	1580000
	323 L4	**390**	2.6	826500	200	60	—	—	—	—	—	803600	1580000
	323 L4	**438**	2.3	835700	200	60	—	—	—	—	—	835100	1580000
	323 L4	**500**	2.0	844300	200	60	—	—	—	—	—	873300	1580000
	323 L4	**569**	1.8	852600	177	60	—	—	—	—	—	911400	1580000
	323 L4	**628**	1.6	859100	162	60	—	—	—	—	—	941900	1580000
	323 L4	**703**	1.4	866600	146	60	—	—	—	—	—	978000	1580000
	323 L4	**758**	1.3	871600	136	60	—	—	—	—	—	1002800	1580000
	323 L4	**882**	1.1	881800	118	60	—	—	—	—	—	1054900	1580000
	323 L4	**1025**	0.98	890300	103	60	—	—	—	—	—	1100000	1580000
	323 L4	**1101**	0.91	890300	96	60	—	—	—	—	—	1100000	1580000
	323 L4	**1279**	0.78	890300	82	60	—	—	—	—	—	1100000	1580000
500	**323 L3**	**83.3**	6.0	702600	260	90	—	—	—	—	—	605400	1580000
	323 L3	**105**	4.8	747400	260	90	—	—	—	—	—	653000	1580000
	323 L3	**113**	4.4	756600	260	90	—	—	—	—	—	669600	1580000
	323 L3	**120**	4.2	763800	260	90	—	—	—	—	—	682800	1580000
	323 L3	**142**	3.5	784900	260	90	—	—	—	—	—	722300	1580000
	323 L3	**165**	3.0	804200	260	90	—	—	—	—	—	759400	1580000
	323 L3	**205**	2.4	831600	232	90	—	—	—	—	—	817600	1580000
	323 L4	**390**	1.3	873500	132	100	—	—	—	—	—	1012500	1580000
	323 L4	**341**	1.5	864600	150	100	—	—	—	—	—	968200	1580000
	323 L4	**390**	1.3	873500	132	100	—	—	—	—	—	1012500	1580000
	323 L4	**438**	1.1	881300	119	100	—	—	—	—	—	1052200	1580000
	323 L4	**500**	1.00	890300	105	100	—	—	—	—	—	1100000	1580000
	323 L4	**569**	0.88	890300	93	100	—	—	—	—	—	1100000	1580000
	323 L4	**628**	0.80	890300	84	100	—	—	—	—	—	1100000	1580000
	323 L4	**703**	0.71	890300	75	100	—	—	—	—	—	1100000	1580000
	323 L4	**758**	0.66	890300	70	100	—	—	—	—	—	1100000	1580000
	323 L4	**882**	0.57	890300	60	100	—	—	—	—	—	1100000	1580000
	323 L4	**1025**	0.49	890300	51	100	—	—	—	—	—	1100000	1580000
	323 L4	**1101**	0.45	890300	48	100	—	—	—	—	—	1100000	1580000
	323 L4	**1279**	0.39	890300	41	100	—	—	—	—	—	1100000	1580000

325 L

450

1286700 Nm

n_1 min^{-1}		i	n_2 min^{-1}	M_{n2} Nm	P_{n1} kW	P_t kW	P (IEC)	Rn_2 [N] MC	MZ	HC/PC	HZ/PZ	FZ	$M_{2\,max}$ Nm
1500	**325 L4**	**341**	4.4	931900	200	65	—	—	—	—	—	854400	2000000
	325 L4	**390**	3.8	952300	200	65	—	—	—	—	—	893500	2000000
	325 L4	**438**	3.4	1004300	200	65	—	—	—	—	—	928500	2000000
	325 L4	**500**	3.0	1026300	200	65	—	—	—	—	—	970900	2000000
	325 L4	**569**	2.6	1066500	200	65	—	—	—	—	—	1013300	2000000
	325 L4	**628**	2.4	1093000	200	65	—	—	—	—	—	1047300	2000000
	325 L4	**703**	2.1	1101500	200	65	—	—	—	—	—	1087300	2000000
	325 L4	**758**	2.0	1147900	200	65	—	—	—	—	—	1114900	2000000
	325 L4	**882**	1.7	1154000	200	65	—	—	—	—	—	1172800	2000000
	325 L4	**1025**	1.5	1190200	200	65	—	—	—	—	—	1233200	2000000
	325 L4	**1101**	1.4	963200	155	65	—	—	—	—	—	1262700	2000000
	325 L4	**1279**	1.2	963200	134	65	—	—	—	—	—	1327700	2000000
1000	**325 L4**	**341**	2.9	1052400	200	78	—	—	—	—	—	978000	2000000
	325 L4	**390**	2.6	1075400	200	78	—	—	—	—	—	1022800	2000000
	325 L4	**438**	2.3	1120700	200	78	—	—	—	—	—	1062900	2000000
	325 L4	**500**	2.0	1130200	200	78	—	—	—	—	—	1111400	2000000
	325 L4	**569**	1.8	1157600	200	78	—	—	—	—	—	1160000	2000000
	325 L4	**628**	1.6	1179300	200	78	—	—	—	—	—	1198800	2000000
	325 L4	**703**	1.4	1197000	200	78	—	—	—	—	—	1244700	2000000
	325 L4	**758**	1.3	1228300	192	78	—	—	—	—	—	1276200	2000000
	325 L4	**882**	1.1	1254000	168	78	—	—	—	—	—	1342600	2000000

B

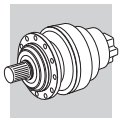

325 L

450

1286700 Nm

n_1 min^{-1}		i	n_2 min^{-1}	M_{n2} Nm	P_{n1} kW	P_t kW	P (IEC)	Rn_2 [N] MC	MZ	HC/PC	HZ/PZ	FZ	$M_{2\,max}$ Nm
1000	**325 L4**	**1025**	0.98	1286700	148	78	—	—	—	—	—	1400000	2000000
	325 L4	**1101**	0.91	963200	104	78	—	—	—	—	—	1400000	2000000
	325 L4	**1279**	0.78	963200	89	78	—	—	—	—	—	1400000	2000000
500	**325 L3**	**83.3**	6.0	849100	260	115	—	—	—	—	—	770500	2000000
	325 L3	**105**	4.8	908900	260	115	—	—	—	—	—	831100	2000000
	325 L3	**113**	4.4	898100	260	115	—	—	—	—	—	852200	2000000
	325 L3	**120**	4.2	928800	260	115	—	—	—	—	—	869100	2000000
	325 L3	**142**	3.5	961400	260	115	—	—	—	—	—	919200	2000000
	325 L3	**165**	3.0	1005800	260	115	—	—	—	—	—	966600	2000000
	325 L3	**205**	2.4	963200	260	115	—	—	—	—	—	1040600	2000000
	325 L4	**390**	1.3	1228100	186	130	—	—	—	—	—	1288600	2000000
	325 L4	**341**	1.5	1206900	200	130	—	—	—	—	—	1232300	2000000
	325 L4	**390**	1.3	1228100	186	130	—	—	—	—	—	1288600	2000000
	325 L4	**438**	1.1	1258300	170	130	—	—	—	—	—	1339100	2000000
	325 L4	**500**	1.00	1286700	152	130	—	—	—	—	—	1400000	2000000
	325 L4	**569**	0.88	1286700	134	130	—	—	—	—	—	1400000	2000000
	325 L4	**628**	0.80	1286700	121	130	—	—	—	—	—	1400000	2000000
	325 L4	**703**	0.71	1286700	108	130	—	—	—	—	—	1400000	2000000
	325 L4	**758**	0.66	1286600	100	130	—	—	—	—	—	1400000	2000000
	325 L4	**882**	0.57	1286700	86	130	—	—	—	—	—	1400000	2000000
	325 L4	**1025**	0.49	1286700	74	130	—	—	—	—	—	1400000	2000000
	325 L4	**1101**	0.45	963200	52	130	—	—	—	—	—	1400000	2000000
	325 L4	**1279**	0.39	963200	45	130	—	—	—	—	—	1400000	2000000

B

25.4 RATING CHARTS FOR RIGHT ANGLE UNITS 300 R

Reading the rating chart.

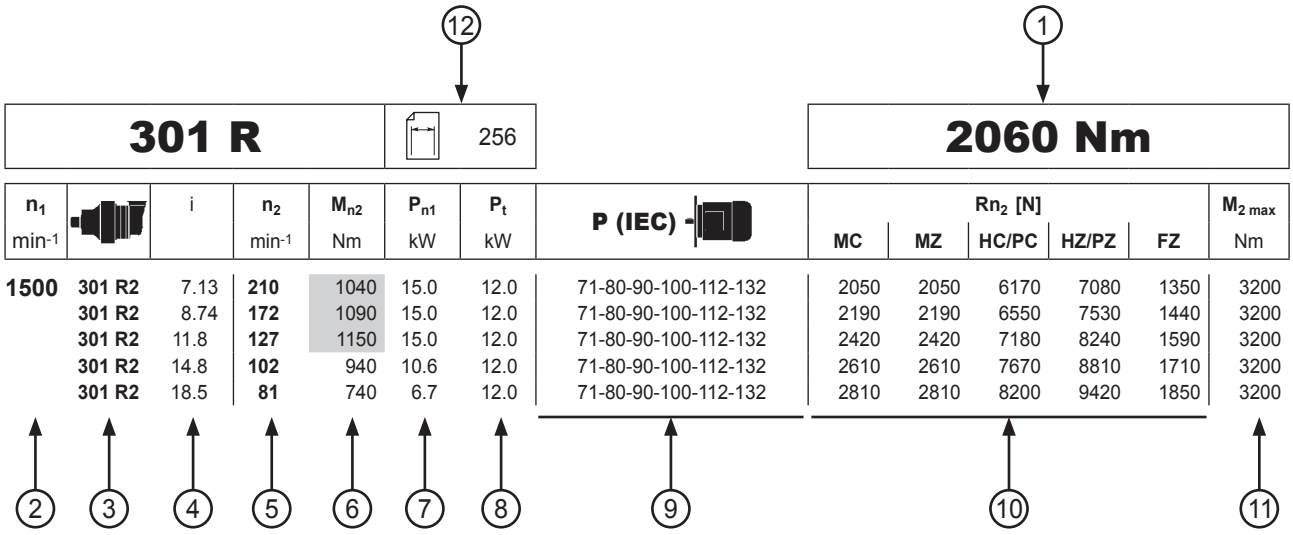

The rated torque of the gearbox, independent of installed mechanical power

1	Reference torque
2	Gearbox drive speed
3	Frame size of the right-angle gear unit. NOTE: letters (B) (C) near size indication identify different angle reduction dimensions. See dimensions pages.
4	Gear ratio
5	Gearbox output speed
6	Gearbox rated output torque based on: - service factor f_S=1 - 10000 h theoretical lifetime
7	Gearbox rated input power, based on: - service factor f_S=1 - 10000 h theoretical lifetime
8	Gearbox thermal capacity
9	Frame size of available IEC motor
10	Permitted overhung loading on output shaft, based on: - service factor f_S=1 - 10000 h theoretical lifetime - speed of output n_2 For forces not applied at shaft middlepoint, see diagrams provided in the specific gearbox overall dimensioning pages
11	Maximum torque
12	Dimensions page

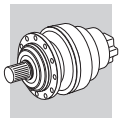

300 R

246

1250 Nm

n_1 min^{-1}		i	n_2 min^{-1}	M_{n2} Nm	P_{n1} kW	Pt kW	P (IEC)	Rn_2 [N] MC/PC	MZ/PZ	HC	HZ	FZ	$M_{2\,max}$ Nm
1500	**300 R2**	**7.13**	210	580	13.7	12.0	71-80-90-100-112-132	2050	2050	6170	7080	1350	2000
	300 R2	**8.74**	172	610	11.7	12.0	71-80-90-100-112-132	2190	2190	6550	7530	1440	2400
	300 R2	**11.8**	127	590	8.3	12.0	71-80-90-100-112-132	2420	2420	7180	8240	1590	2400
	300 R2	**14.8**	102	510	5.7	12.0	71-80-90-100-112-132	2610	2610	7670	8810	1710	2400
	300 R2	**18.5**	81	370	3.3	12.0	71-80-90-100-112-132	2810	2810	8200	9420	1850	2400
	300 R3	**24.8**	60	730	5.1	12.0	71-80-90-100-112-132	3100	3100	8960	10300	2040	2000
	300 R3	**30.4**	49	840	4.8	12.0	71-80-90-100-112-132	3320	3320	9530	10900	2180	2400
	300 R3	**37.3**	40	840	3.9	12.0	71-80-90-100-112-132	3550	3550	10100	11600	2330	2400
	300 R3	**41.2**	36	650	2.7	12.0	71-80-90-100-112-132	3670	3670	10400	12000	2410	2400
	300 R3	**50.4**	29.8	850	2.9	12.0	71-80-90-100-112-132	3930	3930	11100	12700	2580	2400
	300 R3	**62.9**	23.8	850	2.3	12.0	71-80-90-100-112-132	4230	4230	11800	13600	2780	2400
	300 R3	**68.2**	22.0	650	1.6	12.0	71-80-90-100-112-132	4340	4340	12100	13900	2860	2400
	300 R3	**78.7**	19.1	850	1.9	12.0	71-80-90-100-112-132	4550	4550	12700	14600	2990	2400
	300 R3	**85.2**	17.6	650	1.3	12.0	71-80-90-100-112-132	4680	4680	13000	14900	3070	2400
	300 R3	**106**	14.1	650	1.1	12.0	71-80-90-100-112-132	5040	5040	13900	15900	3310	2400
	300 R3	**133**	11.3	550	0.71	12.0	71-80-90-100-112-132	5420	5420	14800	17000	3570	2400
	300 R4	**106**	14.2	860	1.4	10.0	71-80-90-100-112-132	5030	5030	13800	15900	3310	2400
	300 R4	**130**	11.6	860	1.2	10.0	71-80-90-100-112-132	5380	5380	14700	16900	3540	2400
	300 R4	**143**	10.5	650	0.81	10.0	71-80-90-100-112-132	5560	5560	15200	17400	3660	2400
	300 R4	**159**	9.4	870	0.97	10.0	71-80-90-100-112-132	5760	5760	15600	18000	3780	2400
	300 R4	**175**	8.5	880	0.89	10.0	71-80-90-100-112-132	5950	5950	16100	18500	3910	2400
	300 R4	**215**	7.0	910	0.75	10.0	71-80-90-100-112-132	6370	6370	17100	19700	4190	2400
	300 R4	**237**	6.3	650	0.49	10.0	71-80-90-100-112-132	6580	6580	17600	20300	4330	2400
	300 R4	**268**	5.6	930	0.62	10.0	71-80-90-100-112-132	6860	6860	18300	21000	4510	2400
	300 R4	**291**	5.2	950	0.58	10.0	71-80-90-100-112-132	7040	7040	18800	21500	4630	2400
	300 R4	**363**	4.1	980	0.48	10.0	71-80-90-100-112-132	7580	7580	20000	23000	4990	2400
	300 R4	**394**	3.8	680	0.31	10.0	71-80-90-100-112-132	7790	7790	20500	23600	5120	2400
	300 R4	**453**	3.3	1020	0.40	10.0	71-80-90-100-112-132	8160	8160	21400	24600	5370	2400
	300 R4	**491**	3.1	710	0.25	10.0	71-80-90-100-112-132	8390	8390	21900	25200	5510	2400
	300 R4	**613**	2.4	730	0.21	10.0	71-80-90-100-112-132	9030	9030	23500	27000	5940	2400
	300 R4	**766**	2.0	760	0.18	10.0	71-80-90-100-112-132	9730	9730	25100	28800	6400	2400
1000	**300 R2**	**7.13**	140	660	10.3	14.4	71-80-90-100-112-132	2340	2340	6960	8000	1540	2000
	300 R2	**8.74**	114	690	8.8	14.4	71-80-90-100-112-132	2510	2510	7400	8500	1650	2400
	300 R2	**11.8**	85	630	6.0	14.4	71-80-90-100-112-132	2770	2770	8100	9310	1820	2400
	300 R2	**14.8**	68	530	4.0	14.4	71-80-90-100-112-132	2980	2980	8660	9950	1960	2400
	300 R2	**18.5**	54	370	2.2	14.4	71-80-90-100-112-132	3220	3220	9260	10600	2110	2400
	300 R3	**24.8**	40	730	3.4	14.4	71-80-90-100-112-132	3550	3550	10100	11600	2330	2000
	300 R3	**30.4**	33	850	3.2	14.4	71-80-90-100-112-132	3800	3800	10800	12400	2500	2400
	300 R3	**37.3**	26.8	850	2.6	14.4	71-80-90-100-112-132	4060	4060	11400	13100	2670	2400
	300 R3	**41.2**	24.3	650	1.8	14.4	71-80-90-100-112-132	4200	4200	11800	13500	2760	2400
	300 R3	**50.4**	19.8	850	1.9	14.4	71-80-90-100-112-132	4500	4500	12500	14400	2960	2400
	300 R3	**62.9**	15.9	850	1.6	14.4	71-80-90-100-112-132	4840	4840	13400	15400	3180	2400
	300 R3	**68.2**	14.7	650	1.1	14.4	71-80-90-100-112-132	4970	4970	13700	15800	3270	2400
	300 R3	**78.7**	12.7	860	1.3	14.4	71-80-90-100-112-132	5210	5210	14300	16400	3430	2400
	300 R3	**85.2**	11.7	650	0.88	14.4	71-80-90-100-112-132	5350	5350	14700	16800	3520	2400
	300 R3	**106**	9.4	650	0.70	14.4	71-80-90-100-112-132	5770	5770	15700	18000	3790	2400
	300 R3	**133**	7.5	550	0.48	14.4	71-80-90-100-112-132	6210	6210	16700	19200	4080	2400
	300 R4	**106**	9.4	870	0.97	12.0	71-80-90-100-112-132	5760	5760	15600	18000	3780	2400
	300 R4	**130**	7.7	890	0.81	12.0	71-80-90-100-112-132	6160	6160	16600	19100	4050	2400
	300 R4	**143**	7.0	650	0.54	12.0	71-80-90-100-112-132	6370	6370	17100	19700	4190	2400
	300 R4	**159**	6.3	920	0.68	12.0	71-80-90-100-112-132	6590	6590	17700	20300	4330	2400
	300 R4	**175**	5.7	930	0.63	12.0	71-80-90-100-112-132	6810	6810	18200	20900	4480	2400
	300 R4	**215**	4.7	960	0.53	12.0	71-80-90-100-112-132	7290	7290	19300	22200	4790	2400
	300 R4	**237**	4.2	670	0.33	12.0	71-80-90-100-112-132	7540	7540	19900	22900	4950	2400
	300 R4	**268**	3.7	1000	0.44	12.0	71-80-90-100-112-132	7850	7850	20700	23800	5160	2400
	300 R4	**291**	3.4	1010	0.41	12.0	71-80-90-100-112-132	8060	8060	21200	24300	5300	2400
	300 R4	**363**	2.8	1050	0.34	12.0	71-80-90-100-112-132	8680	8680	22600	26000	5710	2400
	300 R4	**394**	2.5	730	0.22	12.0	71-80-90-100-112-132	8920	8920	23200	26600	5860	2400
	300 R4	**453**	2.2	1090	0.29	12.0	71-80-90-100-112-132	9350	9350	24200	27800	6140	2400
	300 R4	**491**	2.0	760	0.18	12.0	71-80-90-100-112-132	9600	9600	24800	28500	6310	2400
	300 R4	**613**	1.6	790	0.15	12.0	71-80-90-100-112-132	10300	10300	26500	30400	6800	2400

B

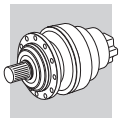

300 R

246

1250 Nm

n_1 min^{-1}		i	n_2 min^{-1}	M_{n2} Nm	P_{n1} kW	Pt kW	P (IEC)	Rn_2 [N] MC/PC	MZ/PZ	HC	HZ	FZ	$M_{2\,max}$ Nm
1000	**300 R4**	**766**	1.3	820	0.13	12.0	71-80-90-100-112-132	11100	11100	28300	32500	7320	2400
500	**300 R2**	**7.13**	70	730	5.7	24	71-80-90-100-112-132	2950	2950	8570	9850	1940	2000
	300 R2	**8.74**	57	820	5.2	24	71-80-90-100-112-132	3160	3160	9110	10500	2080	2400
	300 R2	**11.8**	42	650	3.1	24	71-80-90-100-112-132	3490	3490	9980	11500	2300	2400
	300 R2	**14.8**	34	550	2.1	24	71-80-90-100-112-132	3760	3760	10700	12300	2470	2400
	300 R2	**18.5**	27.1	370	1.1	24	71-80-90-100-112-132	4050	4050	11400	13100	2660	2400
	300 R3	**24.8**	20.1	730	1.7	24	71-80-90-100-112-132	4470	4470	12500	14300	2940	2000
	300 R3	**30.4**	16.4	850	1.6	24	71-80-90-100-112-132	4790	4790	13200	15200	3150	2400
	300 R3	**37.3**	13.4	860	1.3	24	71-80-90-100-112-132	5120	5120	14100	16200	3370	2400
	300 R3	**41.2**	12.1	650	0.91	24	71-80-90-100-112-132	5290	5290	14500	16700	3480	2400
	300 R3	**50.4**	9.9	860	0.98	24	71-80-90-100-112-132	5660	5660	15400	17700	3720	2400
	300 R3	**62.9**	7.9	890	0.81	24	71-80-90-100-112-132	6100	6100	16500	18900	4010	2400
	300 R3	**68.2**	7.3	650	0.55	24	71-80-90-100-112-132	6260	6260	16900	19400	4120	2400
	300 R3	**78.7**	6.4	920	0.67	24	71-80-90-100-112-132	6570	6570	17600	20200	4320	2400
	300 R3	**85.2**	5.9	650	0.44	24	71-80-90-100-112-132	6750	6750	18000	20700	4430	2400
	300 R3	**106**	4.7	660	0.35	24	71-80-90-100-112-132	7270	7270	19300	22200	4780	2400
	300 R3	**133**	3.8	570	0.25	24	71-80-90-100-112-132	7820	7820	20600	23700	5140	2400
	300 R4	**106**	4.7	960	0.54	20	71-80-90-100-112-132	7250	7250	19300	22100	4770	2400
	300 R4	**130**	3.9	990	0.45	20	71-80-90-100-112-132	7760	7760	20500	23500	5100	2400
	300 R4	**143**	3.5	690	0.29	20	71-80-90-100-112-132	8020	8020	21100	24200	5270	2400
	300 R4	**159**	3.1	1030	0.38	20	71-80-90-100-112-132	8300	8300	21700	25000	5460	2400
	300 R4	**175**	2.8	1050	0.35	20	71-80-90-100-112-132	8580	8580	22400	25700	5640	2400
	300 R4	**215**	2.3	1080	0.30	20	71-80-90-100-112-132	9180	9180	23800	27400	6040	2400
	300 R4	**237**	2.1	750	0.19	20	71-80-90-100-112-132	9490	9490	24500	28200	6240	2400
	300 R4	**268**	1.9	1120	0.25	20	71-80-90-100-112-132	9890	9890	25500	29200	6500	2400
	300 R4	**291**	1.7	1140	0.23	20	71-80-90-100-112-132	10200	10200	26100	30000	6680	2400
	300 R4	**363**	1.4	1180	0.19	20	71-80-90-100-112-132	10900	10900	27900	32000	7190	2400
	300 R4	**394**	1.3	820	0.12	20	71-80-90-100-112-132	11200	11200	28600	32800	7390	2400
	300 R4	**453**	1.1	1230	0.16	20	71-80-90-100-112-132	11800	11800	29800	34000	7740	2400
	300 R4	**491**	1.0	860	0.10	20	71-80-90-100-112-132	12000	12100	30500	34000	7950	2400
	300 R4	**613**	0.82	860	0.08	20	71-80-90-100-112-132	12000	12500	31000	34000	8000	2400
	300 R4	**766**	0.65	860	0.07	20	71-80-90-100-112-132	12000	12500	31000	34000	8000	2400

301 R

256

2060 Nm

n_1 min^{-1}		i	n_2 min^{-1}	M_{n2} Nm	P_{n1} kW	Pt kW	P (IEC)	Rn_2 [N] MC	MZ	HC/PC	HZ/PZ	FZ	$M_{2\,max}$ Nm
1500	**301 R2**	**7.13**	210	1040	15.0	12.0	71-80-90-100-112-132	2050	2050	6170	7080	1350	3200
	301 R2	**8.74**	172	1090	15.0	12.0	71-80-90-100-112-132	2190	2190	6550	7530	1440	3200
	301 R2	**11.8**	127	1150	15.0	12.0	71-80-90-100-112-132	2420	2420	7180	8240	1590	3200
	301 R2	**14.8**	102	940	10.6	12.0	71-80-90-100-112-132	2610	2610	7670	8810	1710	3200
	301 R2	**18.5**	81	740	6.7	12.0	71-80-90-100-112-132	2810	2810	8200	9420	1850	3200
	301 R3	**24.8**	60	1390	9.7	12.0	71-80-90-100-112-132	3100	3100	8960	10300	2040	3400
	301 R3	**30.4**	49	1580	8.9	12.0	71-80-90-100-112-132	3320	3320	9530	10900	2180	3400
	301 R3	**37.3**	40	1600	7.4	12.0	71-80-90-100-112-132	3550	3550	10100	11600	2330	3400
	301 R3	**41.2**	36	1300	5.4	12.0	71-80-90-100-112-132	3670	3670	10400	12000	2410	3400
	301 R3	**50.4**	29.8	1630	5.6	12.0	71-80-90-100-112-132	3930	3930	11100	12700	2580	3400
	301 R3	**62.9**	23.8	1650	4.5	12.0	71-80-90-100-112-132	4230	4230	11800	13600	2780	3400
	301 R3	**68.2**	22.0	1300	3.3	12.0	71-80-90-100-112-132	4340	4340	12100	13900	2860	3400
	301 R3	**78.7**	19.1	1570	3.4	12.0	71-80-90-100-112-132	4550	4550	12700	14600	2990	3400
	301 R3	**85.2**	17.6	1300	2.6	12.0	71-80-90-100-112-132	4680	4680	13000	14900	3070	3400
	301 R3	**106**	14.1	1300	2.1	12.0	71-80-90-100-112-132	5040	5040	13900	15900	3310	3400
	301 R3	**133**	11.3	1150	1.5	12.0	71-80-90-100-112-132	5420	5420	14800	17000	3570	3400
	301 R4	**106**	14.2	1700	2.8	10.0	71-80-90-100-112-132	5030	5030	13800	15900	3310	3400
	301 R4	**130**	11.6	1720	2.3	10.0	71-80-90-100-112-132	5380	5380	14700	16900	3540	3400
	301 R4	**143**	10.5	1300	1.6	10.0	71-80-90-100-112-132	5560	5560	15200	17400	3660	3400
	301 R4	**159**	9.4	1740	1.9	10.0	71-80-90-100-112-132	5760	5760	15600	18000	3780	3400

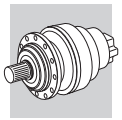

301 R

256

2060 Nm

n_1 min^{-1}		i	n_2 min^{-1}	M_{n2} Nm	P_{n1} kW	Pt kW	P (IEC)	Rn_2 [N] MC	MZ	HC/PC	HZ/PZ	FZ	$M_{2\,max}$ Nm
1500	**301 R4**	**175**	8.5	1770	1.8	10.0	71-80-90-100-112-132	5950	5950	16100	18500	3910	3400
	301 R4	**215**	7.0	1820	1.5	10.0	71-80-90-100-112-132	6370	6370	17100	19700	4190	3400
	301 R4	**237**	6.3	1300	0.97	10.0	71-80-90-100-112-132	6580	6580	17600	20300	4330	3400
	301 R4	**268**	5.6	1870	1.2	10.0	71-80-90-100-112-132	6860	6860	18300	21000	4510	3400
	301 R4	**291**	5.2	1890	1.2	10.0	71-80-90-100-112-132	7040	7040	18800	21500	4630	3400
	301 R4	**363**	4.1	1960	0.96	10.0	71-80-90-100-112-132	7580	7580	20000	23000	4990	3400
	301 R4	**394**	3.8	1360	0.61	10.0	71-80-90-100-112-132	7790	7790	20500	23600	5120	3400
	301 R4	**453**	3.3	1930	0.76	10.0	71-80-90-100-112-132	8160	8160	21400	24600	5370	3400
	301 R4	**491**	3.1	1410	0.51	10.0	71-80-90-100-112-132	8390	8390	21900	25200	5510	3400
	301 R4	**613**	2.4	1470	0.42	10.0	71-80-90-100-112-132	9030	9030	23500	27000	5940	3400
	301 R4	**766**	2.0	1530	0.35	10.0	71-80-90-100-112-132	9730	9730	25100	28800	6400	3400
1000	**301 R2**	**7.13**	140	1170	15.0	14.4	71-80-90-100-112-132	2340	2340	6960	8000	1540	3200
	301 R2	**8.74**	114	1230	15.0	14.4	71-80-90-100-112-132	2510	2510	7400	8500	1650	3200
	301 R2	**11.8**	85	1250	11.8	14.4	71-80-90-100-112-132	2770	2770	8100	9310	1820	3200
	301 R2	**14.8**	68	1050	7.9	14.4	71-80-90-100-112-132	2980	2980	8660	9950	1960	3200
	301 R2	**18.5**	54	740	4.5	14.4	71-80-90-100-112-132	3220	3220	9260	10600	2110	3200
	301 R3	**24.8**	40	1430	6.6	14.4	71-80-90-100-112-132	3550	3550	10100	11600	2330	3400
	301 R3	**30.4**	33	1620	6.1	14.4	71-80-90-100-112-132	3800	3800	10800	12400	2500	3400
	301 R3	**37.3**	26.8	1640	5.0	14.4	71-80-90-100-112-132	4060	4060	11400	13100	2670	3400
	301 R3	**41.2**	24.3	1300	3.6	14.4	71-80-90-100-112-132	4200	4200	11800	13500	2760	3400
	301 R3	**50.4**	19.8	1660	3.8	14.4	71-80-90-100-112-132	4500	4500	12500	14400	2960	3400
	301 R3	**62.9**	15.9	1690	3.1	14.4	71-80-90-100-112-132	4840	4840	13400	15400	3180	3400
	301 R3	**68.2**	14.7	1300	2.2	14.4	71-80-90-100-112-132	4970	4970	13700	15800	3270	3400
	301 R3	**78.7**	12.7	1590	2.3	14.4	71-80-90-100-112-132	5210	5210	14300	16400	3430	3400
	301 R3	**85.2**	11.7	1300	1.8	14.4	71-80-90-100-112-132	5350	5350	14700	16800	3520	3400
	301 R3	**106**	9.4	1300	1.4	14.4	71-80-90-100-112-132	5770	5770	15700	18000	3790	3400
	301 R3	**133**	7.5	1150	0.99	14.4	71-80-90-100-112-132	6210	6210	16700	19200	4080	3400
	301 R4	**106**	9.4	1740	1.9	12.0	71-80-90-100-112-132	5760	5760	15600	18000	3780	3400
	301 R4	**130**	7.7	1790	1.6	12.0	71-80-90-100-112-132	6160	6160	16600	19100	4050	3400
	301 R4	**143**	7.0	1300	1.1	12.0	71-80-90-100-112-132	6370	6370	17100	19700	4190	3400
	301 R4	**159**	6.3	1840	1.4	12.0	71-80-90-100-112-132	6590	6590	17700	20300	4330	3400
	301 R4	**175**	5.7	1870	1.3	12.0	71-80-90-100-112-132	6810	6810	18200	20900	4480	3400
	301 R4	**215**	4.7	1920	1.1	12.0	71-80-90-100-112-132	7290	7290	19300	22200	4790	3400
	301 R4	**237**	4.2	1340	0.67	12.0	71-80-90-100-112-132	7540	7540	19900	22900	4950	3400
	301 R4	**268**	3.7	2000	0.88	12.0	71-80-90-100-112-132	7850	7850	20700	23800	5160	3400
	301 R4	**291**	3.4	2030	0.82	12.0	71-80-90-100-112-132	8060	8060	21200	24300	5300	3400
	301 R4	**363**	2.8	2100	0.69	12.0	71-80-90-100-112-132	8680	8680	22600	26000	5710	3400
	301 R4	**394**	2.5	1460	0.44	12.0	71-80-90-100-112-132	8920	8920	23200	26600	5860	3400
	301 R4	**453**	2.2	2000	0.52	12.0	71-80-90-100-112-132	9350	9350	24200	27800	6140	3400
	301 R4	**491**	2.0	1510	0.36	12.0	71-80-90-100-112-132	9600	9600	24800	28500	6310	3400
	301 R4	**613**	1.6	1580	0.30	12.0	71-80-90-100-112-132	10300	10300	26500	30400	6800	3400
	301 R4	**766**	1.3	1640	0.25	12.0	71-80-90-100-112-132	11100	11100	28300	32500	7320	3400
500	**301 R2**	**7.13**	70	1370	10.6	24	71-80-90-100-112-132	2950	2950	8570	9850	1940	3200
	301 R2	**8.74**	57	1520	9.7	24	71-80-90-100-112-132	3160	3160	9110	10500	2080	3200
	301 R2	**11.8**	42	1300	6.1	24	71-80-90-100-112-132	3490	3490	9980	11500	2300	3200
	301 R2	**14.8**	34	1150	4.3	24	71-80-90-100-112-132	3760	3760	10700	12300	2470	3200
	301 R2	**18.5**	27.1	740	2.2	24	71-80-90-100-112-132	4050	4050	11400	13100	2660	3200
	301 R3	**24.8**	20.1	1430	3.3	24	71-80-90-100-112-132	4470	4470	12500	14300	2940	3400
	301 R3	**30.4**	16.4	1680	3.2	24	71-80-90-100-112-132	4790	4790	13200	15200	3150	3400
	301 R3	**37.3**	13.4	1700	2.6	24	71-80-90-100-112-132	5120	5120	14100	16200	3370	3400
	301 R3	**41.2**	12.1	1300	1.8	24	71-80-90-100-112-132	5290	5290	14500	16700	3480	3400
	301 R3	**50.4**	9.9	1730	2.0	24	71-80-90-100-112-132	5660	5660	15400	17700	3720	3400
	301 R3	**62.9**	7.9	1760	1.6	24	71-80-90-100-112-132	6100	6100	16500	18900	4010	3400
	301 R3	**68.2**	7.3	1300	1.1	24	71-80-90-100-112-132	6260	6260	16900	19400	4120	3400
	301 R3	**78.7**	6.4	1600	1.2	24	71-80-90-100-112-132	6570	6570	17600	20200	4320	3400
	301 R3	**85.2**	5.9	1300	0.88	24	71-80-90-100-112-132	6750	6750	18000	20700	4430	3400
	301 R3	**106**	4.7	1310	0.71	24	71-80-90-100-112-132	7270	7270	19300	22200	4780	3400
	301 R3	**133**	3.8	1150	0.50	24	71-80-90-100-112-132	7820	7820	20600	23700	5140	3400
	301 R4	**106**	4.7	1920	1.1	20	71-80-90-100-112-132	7250	7250	19300	22100	4770	3400

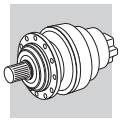

301 R — 256 — 2060 Nm

n_1 min^{-1}		i	n_2 min^{-1}	M_{n2} Nm	P_{n1} kW	Pt kW	P (IEC)	Rn_2 [N] MC	MZ	HC/PC	HZ/PZ	FZ	$M_{2\,max}$ Nm
500	**301 R4**	**130**	3.9	1990	0.91	20	71-80-90-100-112-132	7760	7760	20500	23500	5100	3400
	301 R4	**143**	3.5	1380	0.57	20	71-80-90-100-112-132	8020	8020	21100	24200	5270	3400
	301 R4	**159**	3.1	2060	0.77	20	71-80-90-100-112-132	8300	8300	21700	25000	5460	3400
	301 R4	**175**	2.8	2090	0.71	20	71-80-90-100-112-132	8580	8580	22400	25700	5640	3400
	301 R4	**215**	2.3	2160	0.60	20	71-80-90-100-112-132	9180	9180	23800	27400	6040	3400
	301 R4	**237**	2.1	1510	0.37	20	71-80-90-100-112-132	9490	9490	24500	28200	6240	3400
	301 R4	**268**	1.9	2240	0.49	20	71-80-90-100-112-132	9890	9890	25500	29200	6500	3400
	301 R4	**291**	1.7	2270	0.46	20	71-80-90-100-112-132	10200	10200	26100	30000	6680	3400
	301 R4	**363**	1.4	2340	0.38	20	71-80-90-100-112-132	10900	10900	27900	32000	7190	3400
	301 R4	**394**	1.3	1650	0.25	20	71-80-90-100-112-132	11200	11200	28600	32800	7390	3400
	301 R4	**453**	1.1	2000	0.26	20	71-80-90-100-112-132	11800	11800	29800	34000	7740	3400
	301 R4	**491**	1.0	1710	0.21	20	71-80-90-100-112-132	12000	12100	30500	34000	7950	3400
	301 R4	**613**	0.82	1720	0.17	20	71-80-90-100-112-132	12000	12500	31000	34000	8000	3400
	301 R4	**766**	0.65	1720	0.13	20	71-80-90-100-112-132	12000	12500	31000	34000	8000	3400

303 R — 266 — 2970 Nm

n_1 min^{-1}		i	n_2 min^{-1}	M_{n2} Nm	P_{n1} kW	Pt kW	P (IEC)	Rn_2 [N] MC	MZ	HC/PC	HZ/PZ	FZ	$M_{2\,max}$ Nm
1500	**303 R2**	**9.23**	163	1680	30	18.0	71-80-90-100-112-132	6850	7910	13600	16400	4400	5200
	303 R2	**10.9**	138	1900	29	18.0	71-80-90-100-112-132	7240	8360	14300	17200	4650	5200
	303 R2	**13.7**	110	1970	24	18.0	71-80-90-100-112-132	7810	9020	15300	18400	5010	5200
	303 R2	**15.9**	94	1820	19.1	18.0	71-80-90-100-112-132	8220	9480	16000	19300	5270	5200
	303 R2	**19.2**	78	1550	13.5	18.0	71-80-90-100-112-132	8750	10100	16900	20400	5620	5200
	303 R2	**24.8**	61	860	5.8	18.0	71-80-90-100-112-132	9530	11000	18300	22000	6110	5200
	303 R3	**25.7**	58	2030	13.6	14.0	71-80-90-100-112-132	9640	11100	18500	22200	6190	5200
	303 R3	**31.5**	48	2110	11.5	14.0	71-80-90-100-112-132	10300	11900	19600	23600	6620	5200
	303 R3	**37.1**	40	2390	11.1	14.0	71-80-90-100-112-132	10900	12600	20600	24800	7000	5200
	303 R3	**42.6**	35	2070	8.4	14.0	71-80-90-100-112-132	11400	13200	21500	25900	7320	5200
	303 R3	**46.6**	32	2160	8.0	14.0	71-80-90-100-112-132	11800	13600	22100	26600	7550	5200
	303 R3	**50.3**	29.8	2380	8.2	14.0	71-80-90-100-112-132	12100	13900	22600	27200	7740	5200
	303 R3	**54.2**	27.7	1820	5.8	14.0	71-80-90-100-112-132	12400	14300	23100	27800	7930	5200
	303 R3	**63.1**	23.8	2170	5.9	14.0	71-80-90-100-112-132	13000	15000	24200	29100	8350	5200
	303 R3	**73.3**	20.5	1820	4.3	14.0	71-80-90-100-112-132	13700	15800	25300	30500	8780	5200
	303 R3	**78.7**	19.1	2180	4.8	14.0	71-80-90-100-112-132	14000	16200	25900	31100	8990	5200
	303 R3	**91.5**	16.4	1820	3.4	14.0	71-80-90-100-112-132	14700	17000	27100	32600	9450	5200
	303 R3	**114**	13.1	1820	2.7	14.0	71-80-90-100-112-132	15900	18300	28900	34800	10200	5200
	303 R4	**129**	11.6	2620	3.6	12.0	71-80-90-100-112-132	16500	19100	30000	36100	10600	5200
	303 R4	**148**	10.1	2310	2.8	12.0	71-80-90-100-112-132	17300	20000	31300	37600	11100	5200
	303 R4	**158**	9.5	2660	3.0	12.0	71-80-90-100-112-132	17700	20400	31900	38400	11300	5200
	303 R4	**185**	8.1	2310	2.2	12.0	71-80-90-100-112-132	18600	21500	33400	40200	11900	5200
	303 R4	**214**	7.0	2730	2.3	12.0	71-80-90-100-112-132	19600	22600	34900	42000	12500	5200
	303 R4	**231**	6.5	1830	1.4	12.0	71-80-90-100-112-132	20100	23100	35700	43000	12900	5200
	303 R4	**255**	5.9	1840	1.3	12.0	71-80-90-100-112-132	20700	23900	36800	44300	13300	5200
	303 R4	**290**	5.2	2650	1.6	12.0	71-80-90-100-112-132	21600	25000	38300	46000	13900	5200
	303 R4	**313**	4.8	1850	1.1	12.0	71-80-90-100-112-132	22200	25600	39100	47100	14200	5200
	303 R4	**336**	4.5	2270	1.2	12.0	71-80-90-100-112-132	22700	26200	40000	48100	14600	5200
	303 R4	**364**	4.1	2310	1.1	12.0	71-80-90-100-112-132	23300	26900	40900	49300	15000	5200
	303 R4	**390**	3.8	1930	0.88	12.0	71-80-90-100-112-132	23900	27600	41800	50300	15300	5200
	303 R4	**452**	3.3	2250	0.88	12.0	71-80-90-100-112-132	25100	28900	43700	52600	16100	5200
	303 R4	**528**	2.8	2030	0.68	12.0	71-80-90-100-112-132	26400	30500	45800	55100	16900	5200
	303 R4	**567**	2.6	2430	0.76	12.0	71-80-90-100-112-132	27000	31200	46800	56300	17400	5200
	303 R4	**659**	2.3	2110	0.57	12.0	71-80-90-100-112-132	28400	32800	48900	58900	18200	5200
	303 R4	**797**	1.9	1820	0.41	12.0	71-80-90-100-112-132	30300	35000	51800	62300	19400	5200
	303 R4	**824**	1.8	2200	0.47	12.0	71-80-90-100-112-132	30600	35400	52300	62900	19700	5200
1000	**303 R2**	**9.23**	108	1890	23	22	71-80-90-100-112-132	7850	9060	15400	18500	5030	5200
	303 R2	**10.9**	92	2140	22	22	71-80-90-100-112-132	8290	9570	16100	19400	5320	5200
	303 R2	**13.7**	73	2080	16.9	22	71-80-90-100-112-132	8940	10300	17300	20800	5740	5200
	303 R2	**15.9**	63	1820	12.7	22	71-80-90-100-112-132	9400	10900	18100	21700	6030	5200

B

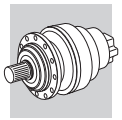

303 R

266

2970 Nm

B

n_1 min^{-1}		i	n_2 min^{-1}	M_{n2} Nm	P_{n1} kW	Pt kW	P (IEC)	Rn_2 [N] MC	MZ	HC/PC	HZ/PZ	FZ	$M_{2\,max}$ Nm
1000	**303 R2**	**19.2**	52	1640	9.5	22	71-80-90-100-112-132	10000	11600	19100	23000	6430	5200
	303 R2	**24.8**	40	860	3.9	22	71-80-90-100-112-132	10900	12600	20700	24800	7000	5200
	303 R3	**25.7**	39	2160	9.6	16.8	71-80-90-100-112-132	11000	12700	20900	25100	7080	5200
	303 R3	**31.5**	32	2160	7.9	16.8	71-80-90-100-112-132	11800	13600	22200	26700	7580	5200
	303 R3	**37.1**	26.9	2460	7.6	16.8	71-80-90-100-112-132	12500	14400	23300	28100	8010	5200
	303 R3	**42.6**	23.5	2110	5.7	16.8	71-80-90-100-112-132	13100	15100	24300	29200	8380	5200
	303 R3	**46.6**	21.5	2170	5.3	16.8	71-80-90-100-112-132	13500	15500	25000	30000	8640	5200
	303 R3	**50.3**	19.9	2470	5.6	16.8	71-80-90-100-112-132	13800	15900	25500	30700	8860	5200
	303 R3	**54.2**	18.5	1820	3.9	16.8	71-80-90-100-112-132	14200	16300	26100	31400	9080	5200
	303 R3	**63.1**	15.9	2180	4.0	16.8	71-80-90-100-112-132	14900	17200	27300	32900	9550	5200
	303 R3	**73.3**	13.6	1820	2.8	16.8	71-80-90-100-112-132	15700	18100	28600	34400	10000	5200
	303 R3	**78.7**	12.7	2190	3.2	16.8	71-80-90-100-112-132	16000	18500	29200	35100	10300	5200
	303 R3	**91.5**	10.9	1820	2.3	16.8	71-80-90-100-112-132	16900	19500	30600	36800	10800	5200
	303 R3	**114**	8.7	1820	1.8	16.8	71-80-90-100-112-132	18200	21000	32700	39300	11700	5200
	303 R4	**129**	7.7	2710	2.5	14.4	71-80-90-100-112-132	18900	21800	33900	40800	12100	5200
	303 R4	**148**	6.7	2310	1.8	14.4	71-80-90-100-112-132	19800	22900	35300	42500	12700	5200
	303 R4	**158**	6.3	2760	2.1	14.4	71-80-90-100-112-132	20200	23400	36000	43300	13000	5200
	303 R4	**185**	5.4	2310	1.5	14.4	71-80-90-100-112-132	21300	24600	37700	45400	13700	5200
	303 R4	**214**	4.7	2810	1.6	14.4	71-80-90-100-112-132	22400	25800	39500	47500	14400	5200
	303 R4	**231**	4.3	1890	0.97	14.4	71-80-90-100-112-132	23000	26500	40300	48500	14700	5200
	303 R4	**255**	3.9	1920	0.89	14.4	71-80-90-100-112-132	23700	27400	41600	50000	15200	5200
	303 R4	**290**	3.4	2680	1.1	14.4	71-80-90-100-112-132	24800	28600	43200	52000	15900	5200
	303 R4	**313**	3.2	1990	0.75	14.4	71-80-90-100-112-132	25400	29300	44200	53200	16300	5200
	303 R4	**336**	3.0	2440	0.86	14.4	71-80-90-100-112-132	26000	30000	45100	54300	16700	5200
	303 R4	**364**	2.7	2480	0.81	14.4	71-80-90-100-112-132	26700	30800	46200	55600	17100	5200
	303 R4	**390**	2.6	2070	0.63	14.4	71-80-90-100-112-132	27300	31600	47200	56800	17500	5200
	303 R4	**452**	2.2	2250	0.59	14.4	71-80-90-100-112-132	28700	33100	49300	59400	18400	5200
	303 R4	**528**	1.9	2180	0.49	14.4	71-80-90-100-112-132	30200	34900	51700	62200	19400	5200
	303 R4	**567**	1.8	2600	0.54	14.4	71-80-90-100-112-132	31000	35700	52800	63500	19900	5200
	303 R4	**659**	1.5	2270	0.41	14.4	71-80-90-100-112-132	32600	37600	55300	66500	20900	5200
	303 R4	**797**	1.3	1930	0.29	14.4	71-80-90-100-112-132	34700	40000	58500	70400	22300	5200
	303 R4	**824**	1.2	2360	0.34	14.4	71-80-90-100-112-132	35100	40500	59100	71100	22500	5200
500	**303 R2**	**9.23**	54	2260	13.7	36	71-80-90-100-112-132	9890	11400	18900	22700	6340	5200
	303 R2	**10.9**	46	2570	13.2	36	71-80-90-100-112-132	10400	12100	19900	23900	6700	5200
	303 R2	**13.7**	37	2150	8.8	36	71-80-90-100-112-132	11300	13000	21300	25600	7230	5200
	303 R2	**15.9**	31	1820	6.4	36	71-80-90-100-112-132	11800	13700	22300	26800	7600	5200
	303 R2	**19.2**	26.0	1650	4.8	36	71-80-90-100-112-132	12600	14600	23600	28300	8100	5200
	303 R2	**24.8**	20.2	860	1.9	36	71-80-90-100-112-132	13700	15900	25400	30600	8810	5200
	303 R3	**25.7**	19.5	2230	5.0	28	71-80-90-100-112-132	13900	16100	25700	30900	8920	5200
	303 R3	**31.5**	15.9	2250	4.1	28	71-80-90-100-112-132	14900	17200	27300	32900	9550	5200
	303 R3	**37.1**	13.5	2590	4.0	28	71-80-90-100-112-132	15700	18200	28700	34500	10100	5200
	303 R3	**42.6**	11.7	2190	3.0	28	71-80-90-100-112-132	16500	19000	29900	36000	10600	5200
	303 R3	**46.6**	10.7	2200	2.7	28	71-80-90-100-112-132	17000	19600	30700	37000	10900	5200
	303 R3	**50.3**	9.9	2620	3.0	28	71-80-90-100-112-132	17400	20100	31400	37800	11200	5200
	303 R3	**54.2**	9.2	1820	1.9	28	71-80-90-100-112-132	17800	20600	32200	38700	11400	5200
	303 R3	**63.1**	7.9	2210	2.0	28	71-80-90-100-112-132	18800	21700	33700	40500	12000	5200
	303 R3	**73.3**	6.8	1830	1.4	28	71-80-90-100-112-132	19700	22800	35200	42400	12700	5200
	303 R3	**78.7**	6.4	2220	1.6	28	71-80-90-100-112-132	20200	23300	36000	43300	13000	5200
	303 R3	**91.5**	5.5	1840	1.2	28	71-80-90-100-112-132	21200	24500	37600	45300	13600	5200
	303 R3	**114**	4.4	1880	0.94	28	71-80-90-100-112-132	22900	26400	40200	48400	14700	5200
	303 R4	**129**	3.9	2810	1.3	24	71-80-90-100-112-132	23800	27500	41700	50200	15300	5200
	303 R4	**148**	3.4	2310	0.92	24	71-80-90-100-112-132	24900	28800	43500	52300	16000	5200
	303 R4	**158**	3.2	2810	1.0	24	71-80-90-100-112-132	25500	29400	44400	53400	16400	5200
	303 R4	**185**	2.7	2310	0.74	24	71-80-90-100-112-132	26900	31000	46500	55900	17200	5200
	303 R4	**214**	2.3	2820	0.78	24	71-80-90-100-112-132	28200	32600	48600	58400	18100	5200
	303 R4	**231**	2.2	2130	0.55	24	71-80-90-100-112-132	28900	33400	49700	59800	18600	5200
	303 R4	**255**	2.0	2170	0.50	24	71-80-90-100-112-132	29900	34500	51200	61600	19200	5200
	303 R4	**290**	1.7	2730	0.56	24	71-80-90-100-112-132	31200	36000	53200	64000	20000	5200
	303 R4	**313**	1.6	2250	0.43	24	71-80-90-100-112-132	32000	36900	54400	65400	20500	5200
	303 R4	**336**	1.5	2700	0.48	24	71-80-90-100-112-132	32800	37800	55600	66900	21000	5200

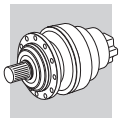

303 R — 266 — 2970 Nm

n_1 min^{-1}		i	n_2 min^{-1}	M_{n2} Nm	P_{n1} kW	Pt kW	P (IEC)	Rn_2 [N] MC	MZ	HC/PC	HZ/PZ	FZ	$M_{2\,max}$ Nm
500	**303 R4**	**364**	1.4	2730	0.44	24	71-80-90-100-112-132	33700	38800	56900	68500	21600	5200
	303 R4	**390**	1.3	2340	0.35	24	71-80-90-100-112-132	34400	39800	58100	69900	22100	5200
	303 R4	**452**	1.1	2250	0.29	24	71-80-90-100-112-132	36000	41700	60700	73100	23200	5200
	303 R4	**528**	0.95	2440	0.27	24	71-80-90-100-112-132	36000	42000	63700	74000	24000	5200
	303 R4	**567**	0.88	2850	0.30	24	71-80-90-100-112-132	36000	42000	64000	74000	24000	5200
	303 R4	**659**	0.76	2440	0.22	24	71-80-90-100-112-132	36000	42000	64000	74000	24000	5200
	303 R4	**797**	0.63	2000	0.15	24	71-80-90-100-112-132	36000	42000	64000	74000	24000	5200
	303 R4	**824**	0.61	2440	0.18	24	71-80-90-100-112-132	36000	42000	64000	74000	24000	5200

304 R — 278 — 3960 Nm

n_1 min^{-1}		i	n_2 min^{-1}	M_{n2} Nm	P_{n1} kW	Pt kW	P (IEC)	Rn_2 [N] MC	MZ	HC/PC	HZ/PZ	FZ	$M_{2\,max}$ Nm
1500	**304 R2**	**9.23**	163	1680	30	18.0	71-80-90-100-112-132	6850	7910	13600	16400	4400	6600
	304 R2	**10.9**	138	1980	30	18.0	71-80-90-100-112-132	7240	8360	14300	17200	4650	6600
	304 R2	**13.7**	110	2490	30	18.0	71-80-90-100-112-132	7810	9020	15300	18400	5010	6600
	304 R2	**16.8**	89	2390	24	18.0	71-80-90-100-112-132	8380	9670	16300	19600	5370	6600
	304 R3	**25.7**	58	3020	15.0	14.0	71-80-90-100-112-132	9640	11100	18500	22200	6190	7300
	304 R3	**31.5**	48	3090	15.0	14.0	71-80-90-100-112-132	10300	11900	19600	23600	6620	7300
	304 R3	**37.1**	40	3440	15.0	14.0	71-80-90-100-112-132	10900	12600	20600	24800	7000	7300
	304 R3	**42.6**	35	3190	12.9	14.0	71-80-90-100-112-132	11400	13200	21500	25900	7320	7300
	304 R3	**46.6**	32	2850	10.5	14.0	71-80-90-100-112-132	11800	13600	22100	26600	7550	7300
	304 R3	**50.3**	29.8	3460	11.9	14.0	71-80-90-100-112-132	12100	13900	22600	27200	7740	7300
	304 R3	**63.1**	23.8	2850	7.8	14.0	71-80-90-100-112-132	13000	15000	24200	29100	8350	7300
	304 R3	**78.7**	19.1	2850	6.2	14.0	71-80-90-100-112-132	14000	16200	25900	31100	8990	7300
	304 R3	**97.0**	15.5	2390	4.2	14.0	71-80-90-100-112-132	15000	17300	27500	33100	9630	7300
	304 R3	**121**	12.4	2390	3.4	14.0	71-80-90-100-112-132	16200	18700	29400	35400	10400	7300
	304 R4	**89.4**	16.8	3330	6.6	12.0	71-80-90-100-112-132	14600	16900	26900	32300	9370	7300
	304 R4	**109**	13.7	3370	5.5	12.0	71-80-90-100-112-132	15600	18000	28600	34400	10000	7300
	304 R4	**129**	11.6	3530	4.8	12.0	71-80-90-100-112-132	16500	19100	30000	36100	10600	7300
	304 R4	**148**	10.1	3440	4.1	12.0	71-80-90-100-112-132	17300	20000	31300	37600	11100	7300
	304 R4	**158**	9.5	3550	4.0	12.0	71-80-90-100-112-132	17700	20400	31900	38400	11300	7300
	304 R4	**185**	8.1	3460	3.3	12.0	71-80-90-100-112-132	18600	21500	33400	40200	11900	7300
	304 R4	**214**	7.0	3620	3.0	12.0	71-80-90-100-112-132	19600	22600	34900	42000	12500	7300
	304 R4	**227**	6.6	3480	2.7	12.0	71-80-90-100-112-132	19900	23000	35500	42700	12800	7300
	304 R4	**267**	5.6	3660	2.4	12.0	71-80-90-100-112-132	21100	24300	37300	44900	13500	7300
	304 R4	**290**	5.2	3680	2.3	12.0	71-80-90-100-112-132	21600	25000	38300	46000	13900	7300
	304 R4	**307**	4.9	3500	2.0	12.0	71-80-90-100-112-132	22000	25400	38900	46800	14100	7300
	304 R4	**338**	4.4	2420	1.3	12.0	71-80-90-100-112-132	22800	26300	40000	48200	14600	7300
	304 R4	**364**	4.1	2940	1.4	12.0	71-80-90-100-112-132	23300	26900	40900	49300	15000	7300
	304 R4	**414**	3.6	2470	1.1	12.0	71-80-90-100-112-132	24300	28100	42500	51200	15600	7300
	304 R4	**452**	3.3	3690	1.4	12.0	71-80-90-100-112-132	25100	28900	43700	52600	16100	7300
	304 R4	**560**	2.7	2540	0.81	12.0	71-80-90-100-112-132	26900	31100	46600	56100	17300	7300
	304 R4	**699**	2.1	2630	0.67	12.0	71-80-90-100-112-132	29000	33500	49800	59900	18600	7300
1000	**304 R2**	**9.23**	108	1890	23	21.6	71-80-90-100-112-132	7850	9060	15400	18500	5030	6600
	304 R2	**10.9**	92	2240	23	21.6	71-80-90-100-112-132	8290	9570	16100	19400	5320	6600
	304 R2	**13.7**	73	2690	22	21.6	71-80-90-100-112-132	8940	10300	17300	20800	5740	6600
	304 R2	**16.8**	59	2390	15.8	21.6	71-80-90-100-112-132	9590	11100	18400	22100	6150	6600
	304 R3	**25.7**	39	3130	14.0	16.8	71-80-90-100-112-132	11000	12700	20900	25100	7080	7300
	304 R3	**31.5**	32	3180	11.6	16.8	71-80-90-100-112-132	11800	13600	22200	26700	7580	7300
	304 R3	**37.1**	26.9	3470	10.7	16.8	71-80-90-100-112-132	12500	14400	23300	28100	8010	7300
	304 R3	**42.6**	23.5	3270	8.8	16.8	71-80-90-100-112-132	13100	15100	24300	29200	8380	7300
	304 R3	**46.6**	21.5	2850	7.0	16.8	71-80-90-100-112-132	13500	15500	25000	30000	8640	7300
	304 R3	**50.3**	19.9	3490	8.0	16.8	71-80-90-100-112-132	13800	15900	25500	30700	8860	7300
	304 R3	**63.1**	15.9	2850	5.2	16.8	71-80-90-100-112-132	14900	17200	27300	32900	9550	7300
	304 R3	**78.7**	12.7	2850	4.2	16.8	71-80-90-100-112-132	16000	18500	29200	35100	10300	7300
	304 R3	**97.0**	10.3	2390	2.8	16.8	71-80-90-100-112-132	17200	19800	31100	37400	11000	7300
	304 R3	**121**	8.2	2390	2.3	16.8	71-80-90-100-112-132	18500	21400	33300	40000	11900	7300

B

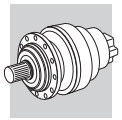

304 R — 278 — 3960 Nm

n_1 min^{-1}		i	n_2 min^{-1}	M_{n2} Nm	P_{n1} kW	Pt kW	P (IEC)	Rn_2 [N] MC	MZ	HC/PC	HZ/PZ	FZ	$M_{2\,max}$ Nm
1000	**304 R4**	**89.4**	11.2	3420	4.5	14.4	71-80-90-100-112-132	16700	19300	30300	36500	10700	7300
	304 R4	**109**	9.1	3450	3.7	14.4	71-80-90-100-112-132	17900	20700	32300	38800	11500	7300
	304 R4	**129**	7.7	3590	3.3	14.4	71-80-90-100-112-132	18900	21800	33900	40800	12100	7300
	304 R4	**148**	6.7	3470	2.8	14.4	71-80-90-100-112-132	19800	22900	35300	42500	12700	7300
	304 R4	**158**	6.3	3640	2.7	14.4	71-80-90-100-112-132	20200	23400	36000	43300	13000	7300
	304 R4	**185**	5.4	3490	2.2	14.4	71-80-90-100-112-132	21300	24600	37700	45400	13700	7300
	304 R4	**214**	4.7	3700	2.0	14.4	71-80-90-100-112-132	22400	25800	39500	47500	14400	7300
	304 R4	**227**	4.4	3500	1.8	14.4	71-80-90-100-112-132	22800	26300	40100	48300	14600	7300
	304 R4	**267**	3.7	3720	1.6	14.4	71-80-90-100-112-132	24100	27800	42200	50700	15500	7300
	304 R4	**290**	3.4	3720	1.5	14.4	71-80-90-100-112-132	24800	28600	43200	52000	15900	7300
	304 R4	**307**	3.3	3510	1.4	14.4	71-80-90-100-112-132	25200	29100	43900	52800	16200	7300
	304 R4	**338**	3.0	2520	0.88	14.4	71-80-90-100-112-132	26000	30100	45200	54400	16700	7300
	304 R4	**364**	2.7	3140	1.0	14.4	71-80-90-100-112-132	26700	30800	46200	55600	17100	7300
	304 R4	**414**	2.4	2580	0.74	14.4	71-80-90-100-112-132	27900	32200	48100	57800	17900	7300
	304 R4	**452**	2.2	3740	0.98	14.4	71-80-90-100-112-132	28700	33100	49300	59400	18400	7300
	304 R4	**560**	1.8	2720	0.57	14.4	71-80-90-100-112-132	30800	35600	52600	63300	19800	7300
	304 R4	**699**	1.4	2830	0.48	14.4	71-80-90-100-112-132	33200	38300	56300	67700	21300	7300
500	**304 R2**	**9.23**	54	2330	14.1	36	71-80-90-100-112-132	9890	11400	18900	22700	6340	6600
	304 R2	**10.9**	46	2720	13.9	36	71-80-90-100-112-132	10400	12100	19900	23900	6700	6600
	304 R2	**13.7**	37	2850	11.6	36	71-80-90-100-112-132	11300	13000	21300	25600	7230	6600
	304 R2	**16.8**	29.7	2390	7.9	36	71-80-90-100-112-132	12100	13900	22600	27200	7750	6600
	304 R3	**25.7**	19.5	3290	7.3	28	71-80-90-100-112-132	13900	16100	25700	30900	8920	7300
	304 R3	**31.5**	15.9	3330	6.1	28	71-80-90-100-112-132	14900	17200	27300	32900	9550	7300
	304 R3	**37.1**	13.5	3520	5.4	28	71-80-90-100-112-132	15700	18200	28700	34500	10100	7300
	304 R3	**42.6**	11.7	3410	4.6	28	71-80-90-100-112-132	16500	19000	29900	36000	10600	7300
	304 R3	**46.6**	10.7	2850	3.5	28	71-80-90-100-112-132	17000	19600	30700	37000	10900	7300
	304 R3	**50.3**	9.9	3540	4.0	28	71-80-90-100-112-132	17400	20100	31400	37800	11200	7300
	304 R3	**63.1**	7.9	2850	2.6	28	71-80-90-100-112-132	18800	21700	33700	40500	12000	7300
	304 R3	**78.7**	6.4	2850	2.1	28	71-80-90-100-112-132	20200	23300	36000	43300	13000	7300
	304 R3	**97.0**	5.2	2390	1.4	28	71-80-90-100-112-132	21700	25000	38300	46100	13900	7300
	304 R3	**121**	4.1	2440	1.2	28	71-80-90-100-112-132	23300	26900	40900	49300	15000	7300
	304 R4	**89.4**	5.6	3490	2.3	24	71-80-90-100-112-132	21100	24300	37400	45000	13500	7300
	304 R4	**109**	4.6	3500	1.9	24	71-80-90-100-112-132	22500	26000	39700	47800	14500	7300
	304 R4	**129**	3.9	3710	1.7	24	71-80-90-100-112-132	23800	27500	41700	50200	15300	7300
	304 R4	**148**	3.4	3510	1.4	24	71-80-90-100-112-132	24900	28800	43500	52300	16000	7300
	304 R4	**158**	3.2	3730	1.4	24	71-80-90-100-112-132	25500	29400	44400	53400	16400	7300
	304 R4	**185**	2.7	3520	1.1	24	71-80-90-100-112-132	26900	31000	46500	55900	17200	7300
	304 R4	**214**	2.3	3770	1.0	24	71-80-90-100-112-132	28200	32600	48600	58400	18100	7300
	304 R4	**227**	2.2	3550	0.93	24	71-80-90-100-112-132	28700	33200	49400	59400	18400	7300
	304 R4	**267**	1.9	3820	0.84	24	71-80-90-100-112-132	30400	35100	51900	62500	19500	7300
	304 R4	**290**	1.7	3830	0.78	24	71-80-90-100-112-132	31200	36000	53200	64000	20000	7300
	304 R4	**307**	1.6	3610	0.70	24	71-80-90-100-112-132	31800	36700	54100	65100	20400	7300
	304 R4	**338**	1.5	2810	0.49	24	71-80-90-100-112-132	32800	37900	55700	67000	21100	7300
	304 R4	**364**	1.4	3540	0.58	24	71-80-90-100-112-132	33700	38800	56900	68500	21600	7300
	304 R4	**414**	1.2	2910	0.42	24	71-80-90-100-112-132	35100	40500	59200	71200	22500	7300
	304 R4	**452**	1.1	3930	0.51	24	71-80-90-100-112-132	36000	41700	60700	73100	23200	7300
	304 R4	**560**	0.89	3010	0.32	24	71-80-90-100-112-132	36000	42000	64000	74000	24000	7300
	304 R4	**699**	0.71	3010	0.25	24	71-80-90-100-112-132	36000	42000	64000	74000	24000	7300

305 R — 290 — 5600 Nm

n_1 min^{-1}		i	n_2 min^{-1}	M_{n2} Nm	P_{n1} kW	Pt kW	P (IEC)	Rn_2 [N] MC	MZ	HC/PC	HZ/PZ	FZ	$M_{2\,max}$ Nm
1500	**305 R2**	**9.23**	163	1680	30	18.0	71-80-90-100-112-132	6850	7910	13600	16400	4400	7700
	305 R2	**10.9**	138	1980	30	18.0	71-80-90-100-112-132	7240	8360	14300	17200	4650	7700
	305 R2	**13.7**	110	2490	30	18.0	71-80-90-100-112-132	7810	9020	15300	18400	5010	7700
	305 R2	**15.9**	94	2890	30	18.0	71-80-90-100-112-132	8220	9480	16000	19300	5270	7700
	305 R2	**19.2**	78	2860	25	18.0	71-80-90-100-112-132	8750	10100	16900	20400	5620	7700

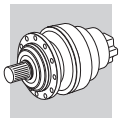

305 R

290

5600 Nm

n_1 min^{-1}		i	n_2 min^{-1}	M_{n2} Nm	P_{n1} kW	Pt kW	P (IEC)	Rn_2 [N] MC	MZ	HC/PC	HZ/PZ	FZ	$M_{2\,max}$ Nm
1500	**305 R3**	**25.7**	58	3630	15.0	14.0	71-80-90-100-112-132	9640	11100	18500	22200	6190	8800
	305 R3	**31.5**	48	3770	15.0	14.0	71-80-90-100-112-132	10300	11900	19600	23600	6620	8800
	305 R3	**37.1**	40	4340	15.0	14.0	71-80-90-100-112-132	10900	12600	20600	24800	7000	8800
	305 R3	**42.6**	35	3790	15.0	14.0	71-80-90-100-112-132	11400	13200	21500	25900	7320	8800
	305 R3	**46.6**	32	4310	15.0	14.0	71-80-90-100-112-132	11800	13600	22100	26600	7550	8800
	305 R3	**50.3**	29.8	4410	15.0	14.0	71-80-90-100-112-132	12100	13900	22600	27200	7740	8800
	305 R3	**54.2**	27.7	3570	11.3	14.0	71-80-90-100-112-132	12400	14300	23100	27800	7930	8800
	305 R3	**63.1**	23.8	4330	11.8	14.0	71-80-90-100-112-132	13000	15000	24200	29100	8350	8800
	305 R3	**73.3**	20.5	3580	8.4	14.0	71-80-90-100-112-132	13700	15800	25300	30500	8780	8800
	305 R3	**78.7**	19.1	4350	9.5	14.0	71-80-90-100-112-132	14000	16200	25900	31100	8990	8800
	305 R3	**91.5**	16.4	3580	6.7	14.0	71-80-90-100-112-132	14700	17000	27100	32600	9450	8800
	305 R3	**114**	13.1	3580	5.4	14.0	71-80-90-100-112-132	15900	18300	28900	34800	10200	8800
	305 R4	**129**	11.6	5200	7.1	12.0	71-80-90-100-112-132	16500	19100	30000	36100	10600	8800
	305 R4	**148**	10.1	4480	5.4	12.0	71-80-90-100-112-132	17300	20000	31300	37600	11100	8800
	305 R4	**158**	9.5	5310	6.0	12.0	71-80-90-100-112-132	17700	20400	31900	38400	11300	8800
	305 R4	**185**	8.1	4490	4.3	12.0	71-80-90-100-112-132	18600	21500	33400	40200	11900	8800
	305 R4	**214**	7.0	5390	4.5	12.0	71-80-90-100-112-132	19600	22600	34900	42000	12500	8800
	305 R4	**231**	6.5	3600	2.8	12.0	71-80-90-100-112-132	20100	23100	35700	43000	12900	8800
	305 R4	**255**	5.9	3600	2.5	12.0	71-80-90-100-112-132	20700	23900	36800	44300	13300	8800
	305 R4	**290**	5.2	5300	3.2	12.0	71-80-90-100-112-132	21600	25000	38300	46000	13900	8800
	305 R4	**313**	4.8	3620	2.1	12.0	71-80-90-100-112-132	22200	25600	39100	47100	14200	8800
	305 R4	**336**	4.5	4560	2.4	12.0	71-80-90-100-112-132	22700	26200	40000	48100	14600	8800
	305 R4	**364**	4.1	4620	2.3	12.0	71-80-90-100-112-132	23300	26900	40900	49300	15000	8800
	305 R4	**390**	3.8	3750	1.7	12.0	71-80-90-100-112-132	23900	27600	41800	50300	15300	8800
	305 R4	**452**	3.3	4750	1.9	12.0	71-80-90-100-112-132	25100	28900	43700	52600	16100	8800
	305 R4	**528**	2.8	3920	1.3	12.0	71-80-90-100-112-132	26400	30500	45800	55100	16900	8800
	305 R4	**567**	2.6	4860	1.5	12.0	71-80-90-100-112-132	27000	31200	46800	56300	17400	8800
	305 R4	**659**	2.3	4070	1.1	12.0	71-80-90-100-112-132	28400	32800	48900	58900	18200	8800
	305 R4	**797**	1.9	3450	0.77	12.0	71-80-90-100-112-132	30300	35000	51800	62300	19400	8800
	305 R4	**824**	1.8	4230	0.91	12.0	71-80-90-100-112-132	30600	35400	52300	62900	19700	8800
1000	**305 R2**	**9.23**	108	1890	23	22	71-80-90-100-112-132	7850	9060	15400	18500	5030	7700
	305 R2	**10.9**	92	2240	23	22	71-80-90-100-112-132	8290	9570	16100	19400	5320	7700
	305 R2	**13.7**	73	2810	23	22	71-80-90-100-112-132	8940	10300	17300	20800	5740	7700
	305 R2	**15.9**	63	3270	23	22	71-80-90-100-112-132	9400	10900	18100	21700	6030	7700
	305 R2	**19.2**	52	2990	17.3	22	71-80-90-100-112-132	10000	11600	19100	23000	6430	7700
	305 R3	**25.7**	39	3900	15.0	16.8	71-80-90-100-112-132	11000	12700	20900	25100	7080	8800
	305 R3	**31.5**	32	3950	14.4	16.8	71-80-90-100-112-132	11800	13600	22200	26700	7580	8800
	305 R3	**37.1**	26.9	4600	14.2	16.8	71-80-90-100-112-132	12500	14400	23300	28100	8010	8800
	305 R3	**42.6**	23.5	3990	10.7	16.8	71-80-90-100-112-132	13100	15100	24300	29200	8380	8800
	305 R3	**46.6**	21.5	4340	10.7	16.8	71-80-90-100-112-132	13500	15500	25000	30000	8640	8800
	305 R3	**50.3**	19.9	4700	10.7	16.8	71-80-90-100-112-132	13800	15900	25500	30700	8860	8800
	305 R3	**54.2**	18.5	3580	7.6	16.8	71-80-90-100-112-132	14200	16300	26100	31400	9080	8800
	305 R3	**63.1**	15.9	4370	7.9	16.8	71-80-90-100-112-132	14900	17200	27300	32900	9550	8800
	305 R3	**73.3**	13.6	3590	5.6	16.8	71-80-90-100-112-132	15700	18100	28600	34400	10000	8800
	305 R3	**78.7**	12.7	4380	6.4	16.8	71-80-90-100-112-132	16000	18500	29200	35100	10300	8800
	305 R3	**91.5**	10.9	3600	4.5	16.8	71-80-90-100-112-132	16900	19500	30600	36800	10800	8800
	305 R3	**114**	8.7	3600	3.6	16.8	71-80-90-100-112-132	18200	21000	32700	39300	11700	8800
	305 R4	**129**	7.7	5370	4.9	14.4	71-80-90-100-112-132	18900	21800	33900	40800	12100	8800
	305 R4	**148**	6.7	4490	3.6	14.4	71-80-90-100-112-132	19800	22900	35300	42500	12700	8800
	305 R4	**158**	6.3	5420	4.0	14.4	71-80-90-100-112-132	20200	23400	36000	43300	13000	8800
	305 R4	**185**	5.4	4490	2.9	14.4	71-80-90-100-112-132	21300	24600	37700	45400	13700	8800
	305 R4	**214**	4.7	5480	3.0	14.4	71-80-90-100-112-132	22400	25800	39500	47500	14400	8800
	305 R4	**231**	4.3	3680	1.9	14.4	71-80-90-100-112-132	23000	26500	40300	48500	14700	8800
	305 R4	**255**	3.9	3740	1.7	14.4	71-80-90-100-112-132	23700	27400	41600	50000	15200	8800
	305 R4	**290**	3.4	5350	2.2	14.4	71-80-90-100-112-132	24800	28600	43200	52000	15900	8800
	305 R4	**313**	3.2	3850	1.5	14.4	71-80-90-100-112-132	25400	29300	44200	53200	16300	8800
	305 R4	**336**	3.0	4890	1.7	14.4	71-80-90-100-112-132	26000	30000	45100	54300	16700	8800
	305 R4	**364**	2.7	4960	1.6	14.4	71-80-90-100-112-132	26700	30800	46200	55600	17100	8800
	305 R4	**390**	2.6	3980	1.2	14.4	71-80-90-100-112-132	27300	31600	47200	56800	17500	8800
	305 R4	**452**	2.2	4750	1.2	14.4	71-80-90-100-112-132	28700	33100	49300	59400	18400	8800
	305 R4	**528**	1.9	4200	0.94	14.4	71-80-90-100-112-132	30200	34900	51700	62200	19400	8800

B

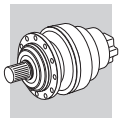

305 R — 290 — 5600 Nm

n_1 min^{-1}		i	n_2 min^{-1}	M_{n2} Nm	P_{n1} kW	Pt kW	P (IEC)	Rn_2 [N] MC	MZ	HC/PC	HZ/PZ	FZ	$M_{2\,max}$ Nm
1000	**305 R4**	**567**	1.8	5160	1.1	14.4	71-80-90-100-112-132	31000	35700	52800	63500	19900	8800
	305 R4	**659**	1.5	4360	0.78	14.4	71-80-90-100-112-132	32600	37600	55300	66500	20900	8800
	305 R4	**797**	1.3	3670	0.54	14.4	71-80-90-100-112-132	34700	40000	58500	70400	22300	8800
	305 R4	**824**	1.2	4530	0.65	14.4	71-80-90-100-112-132	35100	40500	59100	71100	22500	8800
500	**305 R2**	**9.23**	54	2330	14.1	36	71-80-90-100-112-132	9890	11400	18900	22700	6340	7700
	305 R2	**10.9**	46	2750	14.0	36	71-80-90-100-112-132	10400	12100	19900	23900	6700	7700
	305 R2	**13.7**	37	3340	13.6	36	71-80-90-100-112-132	11300	13000	21300	25600	7230	7700
	305 R2	**15.9**	31	3530	12.4	36	71-80-90-100-112-132	11800	13700	22300	26800	7600	7700
	305 R2	**19.2**	26.0	3040	8.8	36	71-80-90-100-112-132	12600	14600	23600	28300	8100	7700
	305 R3	**25.7**	19.5	4190	9.4	28	71-80-90-100-112-132	13900	16100	25700	30900	8920	8800
	305 R3	**31.5**	15.9	4260	7.8	28	71-80-90-100-112-132	14900	17200	27300	32900	9550	8800
	305 R3	**37.1**	13.5	5080	7.8	28	71-80-90-100-112-132	15700	18200	28700	34500	10100	8800
	305 R3	**42.6**	11.7	4340	5.9	28	71-80-90-100-112-132	16500	19000	29900	36000	10600	8800
	305 R3	**46.6**	10.7	4390	5.4	28	71-80-90-100-112-132	17000	19600	30700	37000	10900	8800
	305 R3	**50.3**	9.9	5230	6.0	28	71-80-90-100-112-132	17400	20100	31400	37800	11200	8800
	305 R3	**54.2**	9.2	3600	3.8	28	71-80-90-100-112-132	17800	20600	32200	38700	11400	8800
	305 R3	**63.1**	7.9	4420	4.0	28	71-80-90-100-112-132	18800	21700	33700	40500	12000	8800
	305 R3	**73.3**	6.8	3600	2.8	28	71-80-90-100-112-132	19700	22800	35200	42400	12700	8800
	305 R3	**78.7**	6.4	4450	3.2	28	71-80-90-100-112-132	20200	23300	36000	43300	13000	8800
	305 R3	**91.5**	5.5	3600	2.3	28	71-80-90-100-112-132	21200	24500	37600	45300	13600	8800
	305 R3	**114**	4.4	3670	1.8	28	71-80-90-100-112-132	22900	26400	40200	48400	14700	8800
	305 R4	**129**	3.9	5480	2.5	24	71-80-90-100-112-132	23800	27500	41700	50200	15300	8800
	305 R4	**148**	3.4	4490	1.8	24	71-80-90-100-112-132	24900	28800	43500	52300	16000	8800
	305 R4	**158**	3.2	5490	2.1	24	71-80-90-100-112-132	25500	29400	44400	53400	16400	8800
	305 R4	**185**	2.7	4490	1.4	24	71-80-90-100-112-132	26900	31000	46500	55900	17200	8800
	305 R4	**214**	2.3	5520	1.5	24	71-80-90-100-112-132	28200	32600	48600	58400	18100	8800
	305 R4	**231**	2.2	4100	1.1	24	71-80-90-100-112-132	28900	33400	49700	59800	18600	8800
	305 R4	**255**	2.0	4170	0.97	24	71-80-90-100-112-132	29900	34500	51200	61600	19200	8800
	305 R4	**290**	1.7	5450	1.1	24	71-80-90-100-112-132	31200	36000	53200	64000	20000	8800
	305 R4	**313**	1.6	4320	0.82	24	71-80-90-100-112-132	32000	36900	54400	65400	20500	8800
	305 R4	**336**	1.5	5350	0.94	24	71-80-90-100-112-132	32800	37800	55600	66900	21000	8800
	305 R4	**364**	1.4	5400	0.88	24	71-80-90-100-112-132	33700	38800	56900	68500	21600	8800
	305 R4	**390**	1.3	4490	0.68	24	71-80-90-100-112-132	34400	39800	58100	69900	22100	8800
	305 R4	**452**	1.1	4750	0.62	24	71-80-90-100-112-132	36000	41700	60700	73100	23200	8800
	305 R4	**528**	0.95	4690	0.53	24	71-80-90-100-112-132	36000	42000	63700	74000	24000	8800
	305 R4	**567**	0.88	5600	0.58	24	71-80-90-100-112-132	36000	42000	64000	74000	24000	8800
	305 R4	**659**	0.76	4690	0.42	24	71-80-90-100-112-132	36000	42000	64000	74000	24000	8800
	305 R4	**797**	0.63	3800	0.28	24	71-80-90-100-112-132	36000	42000	64000	74000	24000	8800
	305 R4	**824**	0.61	4690	0.34	24	71-80-90-100-112-132	36000	42000	64000	74000	24000	8800

306 R — 302 — 7300 Nm

n_1 min^{-1}		i	n_2 min^{-1}	M_{n2} Nm	P_{n1} kW	Pt kW	P (IEC)	Rn_2 [N] MC	MZ	HC/PC	HZ/PZ	FZ	$M_{2\,max}$ Nm
1500	**306 R2**	**9.23**	163	1680	30	18.0	71-80-90-100-112-132-160	8540	9670	22200	25900	6410	12000
	306 R2	**10.9**	138	1980	30	18.0	71-80-90-100-112-132-160	9020	10200	23400	27200	6780	12000
	306 R2	**13.7**	110	2490	30	18.0	71-80-90-100-112-132-160	9730	11000	25000	29100	7310	12000
	306 R2	**15.9**	94	2890	30	18.0	71-80-90-100-112-132-160	10200	11600	26200	30500	7690	12000
	306 R2	**19.2**	78	3490	30	18.0	71-80-90-100-112-132-160	10900	12400	27700	32300	8190	12000
	306 R3	**33.2**	45	5810	30	14.0	71-80-90-100-112-132-160	13100	14800	32700	38000	9830	14900
	306 R3	**39.2**	38	6550	29	14.0	71-80-90-100-112-132-160	13800	15700	34300	40000	10400	14900
	306 R3	**46.3**	32	7510	28	14.0	71-80-90-100-112-132-160	14600	16600	36100	42000	11000	14900
	306 R3	**58.1**	25.8	7580	22	14.0	71-80-90-100-112-132-160	15800	17900	38600	45000	11800	14900
	306 R3	**67.5**	22.2	7090	18.1	14.0	71-80-90-100-112-132-160	16600	18800	40400	47100	12500	14900
	306 R3	**72.9**	20.6	7420	17.5	14.0	71-80-90-100-112-132-160	17000	19300	41300	48100	12800	14900
	306 R3	**84.7**	17.7	7530	15.3	14.0	71-80-90-100-112-132-160	17900	20300	43300	50400	13400	14900
	306 R3	**98.5**	15.2	6490	11.3	14.0	71-80-90-100-112-132-160	18800	21300	45300	52700	14100	14900
	306 R3	**119**	12.6	6490	9.4	14.0	71-80-90-100-112-132-160	20000	22700	47900	55800	15000	14900

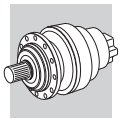

306 R

302

7300 Nm

n_1 min^{-1}		i	n_2 min^{-1}	M_{n2} Nm	P_{n1} kW	Pt kW	P (IEC)	Rn_2 [N] MC	MZ	HC/PC	HZ/PZ	FZ	$M_{2\,max}$ Nm
1500	**306 R3**	**144**	10.4	5490	6.6	14.0	71-80-90-100-112-132-160	21300	24200	50700	59100	16000	14900
	306 R4	**158**	9.5	9620	10.8	12.0	71-80-90-100-112-132-160	22000	24900	52100	60700	16500	14900
	306 R4	**168**	8.9	7560	8.0	12.0	71-80-90-100-112-132-160	22400	25400	53100	61800	16900	14900
	306 R4	**181**	8.3	9450	9.3	12.0	71-80-90-100-112-132-160	23000	26100	54300	63200	17300	14900
	306 R4	**214**	7.0	9730	8.1	12.0	71-80-90-100-112-132-160	24300	27600	57100	66500	18300	14900
	306 R4	**230**	6.5	7590	5.8	12.0	71-80-90-100-112-132-160	24900	28300	58400	68000	18700	14900
	306 R4	**249**	6.0	8200	5.9	12.0	71-80-90-100-112-132-160	25600	29000	59700	69600	19200	14900
	306 R4	**289**	5.2	8280	5.1	12.0	71-80-90-100-112-132-160	26900	30500	62500	72800	20200	14900
	306 R4	**312**	4.8	7590	4.3	12.0	71-80-90-100-112-132-160	27600	31300	63900	74500	20700	14900
	306 R4	**389**	3.9	7590	3.5	12.0	71-80-90-100-112-132-160	29700	33700	68300	79600	22300	14900
	306 R4	**420**	3.6	8790	3.7	12.0	71-80-90-100-112-132-160	30500	34500	69900	81400	22900	14900
	306 R4	**455**	3.3	7020	2.7	12.0	71-80-90-100-112-132-160	31300	35500	71600	83400	23500	14900
	306 R4	**488**	3.1	9020	3.3	12.0	71-80-90-100-112-132-160	32000	36300	73200	85200	24100	14900
	306 R4	**550**	2.7	7260	2.3	12.0	71-80-90-100-112-132-160	33300	37800	75800	88300	25100	14900
	306 R4	**590**	2.5	8480	2.5	12.0	71-80-90-100-112-132-160	34100	38700	77400	90200	25600	14900
	306 R4	**665**	2.3	6010	1.6	12.0	71-80-90-100-112-132-160	35500	40300	80300	93500	26700	14900
	306 R4	**830**	1.8	6270	1.3	12.0	71-80-90-100-112-132-160	38300	43300	85800	99900	28700	14900
1000	**306 R2**	**9.23**	108	1890	23	22	71-80-90-100-112-132-160	9770	11100	25100	29200	7340	12000
	306 R2	**10.9**	92	2240	23	22	71-80-90-100-112-132-160	10300	11700	26400	30700	7760	12000
	306 R2	**13.7**	73	2810	23	22	71-80-90-100-112-132-160	11100	12600	28300	32900	8370	12000
	306 R2	**15.9**	63	3270	23	22	71-80-90-100-112-132-160	11700	13300	29600	34400	8800	12000
	306 R2	**19.2**	52	3940	23	22	71-80-90-100-112-132-160	12500	14100	31300	36500	9380	12000
	306 R3	**33.2**	30	6330	22	16.8	71-80-90-100-112-132-160	15000	17000	36900	43000	11300	14900
	306 R3	**39.2**	25.5	7280	21	16.8	71-80-90-100-112-132-160	15800	17900	38800	45100	11900	14900
	306 R3	**46.3**	21.6	8170	20	16.8	71-80-90-100-112-132-160	16700	19000	40800	47500	12600	14900
	306 R3	**58.1**	17.2	8200	16.2	16.8	71-80-90-100-112-132-160	18000	20400	43600	50800	13600	14900
	306 R3	**67.5**	14.8	7340	12.5	16.8	71-80-90-100-112-132-160	19000	21500	45600	53100	14300	14900
	306 R3	**72.9**	13.7	7710	12.1	16.8	71-80-90-100-112-132-160	19500	22000	46700	54400	14600	14900
	306 R3	**84.7**	11.8	7820	10.6	16.8	71-80-90-100-112-132-160	20500	23200	48900	56900	15400	14900
	306 R3	**98.5**	10.2	6500	7.6	16.8	71-80-90-100-112-132-160	21500	24400	51100	59500	16200	14900
	306 R3	**119**	8.4	6510	6.3	16.8	71-80-90-100-112-132-160	22900	26000	54100	63000	17200	14900
	306 R3	**144**	6.9	5500	4.4	16.8	71-80-90-100-112-132-160	24400	27700	57300	66700	18400	14900
	306 R4	**158**	6.3	9760	7.3	14.4	71-80-90-100-112-132-160	25200	28500	58900	68600	18900	14900
	306 R4	**168**	6.0	7660	5.4	14.4	71-80-90-100-112-132-160	25700	29100	60000	69800	19300	14900
	306 R4	**181**	5.5	9450	6.2	14.4	71-80-90-100-112-132-160	26400	29900	61300	71400	19800	14900
	306 R4	**214**	4.7	9850	5.5	14.4	71-80-90-100-112-132-160	27800	31600	64500	75100	20900	14900
	306 R4	**230**	4.3	7590	3.9	14.4	71-80-90-100-112-132-160	28600	32400	65900	76800	21500	14900
	306 R4	**249**	4.0	8620	4.1	14.4	71-80-90-100-112-132-160	29300	33200	67500	78600	22000	14900
	306 R4	**289**	3.5	8840	3.6	14.4	71-80-90-100-112-132-160	30800	34900	70600	82200	23100	14900
	306 R4	**312**	3.2	7590	2.9	14.4	71-80-90-100-112-132-160	31600	35800	72200	84100	23700	14900
	306 R4	**389**	2.6	7590	2.3	14.4	71-80-90-100-112-132-160	34000	38500	77200	89900	25500	14900
	306 R4	**420**	2.4	9390	2.6	14.4	71-80-90-100-112-132-160	34900	39500	79000	91900	26200	14900
	306 R4	**455**	2.2	7530	2.0	14.4	71-80-90-100-112-132-160	35800	40600	80900	94200	26900	14900
	306 R4	**488**	2.0	9390	2.3	14.4	71-80-90-100-112-132-160	36700	41600	82600	96200	27600	14900
	306 R4	**550**	1.8	7740	1.7	14.4	71-80-90-100-112-132-160	38200	43200	85600	99700	28700	14900
	306 R4	**590**	1.7	8910	1.8	14.4	71-80-90-100-112-132-160	39100	44300	87500	101800	29400	14900
	306 R4	**665**	1.5	6490	1.2	14.4	71-80-90-100-112-132-160	40700	46100	90700	105600	30600	14900
	306 R4	**830**	1.2	6760	0.96	14.4	71-80-90-100-112-132-160	43800	49600	96900	112800	32900	14900
500	**306 R2**	**9.23**	54	2330	14.1	36	71-80-90-100-112-132-160	12300	13900	30900	36000	9250	12000
	306 R2	**10.9**	46	2750	14.0	36	71-80-90-100-112-132-160	13000	14700	32500	37800	9770	12000
	306 R2	**13.7**	37	3460	14.1	36	71-80-90-100-112-132-160	14000	15900	34800	40500	10500	12000
	306 R2	**15.9**	31	4020	14.1	36	71-80-90-100-112-132-160	14800	16700	36400	42400	11100	12000
	306 R2	**19.2**	26.0	4510	13.1	36	71-80-90-100-112-132-160	15700	17800	38500	44900	11800	12000
	306 R3	**33.2**	15.1	7350	12.7	28	71-80-90-100-112-132-160	18900	21400	45400	52900	14200	14900
	306 R3	**39.2**	12.8	8730	12.8	28	71-80-90-100-112-132-160	19900	22600	47700	55600	15000	14900
	306 R3	**46.3**	10.8	9450	11.7	28	71-80-90-100-112-132-160	21100	23900	50200	58400	15800	14900
	306 R3	**58.1**	8.6	9100	9.0	28	71-80-90-100-112-132-160	22700	25800	53700	62500	17100	14900
	306 R3	**67.5**	7.4	7590	6.4	28	71-80-90-100-112-132-160	23900	27100	56200	65400	18000	14900
	306 R3	**72.9**	6.9	8140	6.4	28	71-80-90-100-112-132-160	24500	27800	57500	66900	18400	14900
	306 R3	**84.7**	5.9	8210	5.6	28	71-80-90-100-112-132-160	25800	29200	60100	70000	19400	14900

B

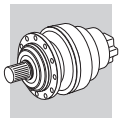

306 R — 302 — 7300 Nm

n_1 min^{-1}		i	n_2 min^{-1}	M_{n2} Nm	P_{n1} kW	Pt kW	P (IEC)	Rn_2 [N] MC	MZ	HC/PC	HZ/PZ	FZ	$M_{2\,max}$ Nm
500	**306 R3**	**98.5**	5.1	6530	3.8	28	71-80-90-100-112-132-160	27100	30700	62900	73300	20400	14900
	306 R3	**119**	4.2	6730	3.2	28	71-80-90-100-112-132-160	28900	32700	66600	77600	21700	14900
	306 R3	**144**	3.5	5710	2.3	28	71-80-90-100-112-132-160	30800	34900	70500	82100	23100	14900
	306 R4	**158**	3.2	9850	3.7	24	71-80-90-100-112-132-160	31700	35900	72500	84400	23800	14900
	306 R4	**168**	3.0	7700	2.7	24	71-80-90-100-112-132-160	32400	36700	73800	86000	24300	14900
	306 R4	**181**	2.8	9450	3.1	24	71-80-90-100-112-132-160	33200	37600	75500	87900	24900	14900
	306 R4	**214**	2.3	9890	2.7	24	71-80-90-100-112-132-160	35100	39800	79400	92400	26400	14900
	306 R4	**230**	2.2	7640	2.0	24	71-80-90-100-112-132-160	36000	40800	81200	94500	27000	14900
	306 R4	**249**	2.0	9520	2.3	24	71-80-90-100-112-132-160	36900	41800	83100	96700	27700	14900
	306 R4	**289**	1.7	9430	1.9	24	71-80-90-100-112-132-160	38800	44000	86900	101200	29200	14900
	306 R4	**312**	1.6	7730	1.5	24	71-80-90-100-112-132-160	39800	45100	88900	103500	29900	14900
	306 R4	**389**	1.3	8240	1.3	24	71-80-90-100-112-132-160	42800	48500	95000	110600	32200	14900
	306 R4	**420**	1.2	9940	1.4	24	71-80-90-100-112-132-160	44000	49800	97200	113200	33000	14900
	306 R4	**455**	1.1	8490	1.1	24	71-80-90-100-112-132-160	45000	51000	99600	115900	33900	14900
	306 R4	**488**	1.0	9530	1.2	24	71-80-90-100-112-132-160	45000	51000	101000	118400	34700	14900
	306 R4	**550**	0.91	8500	0.91	24	71-80-90-100-112-132-160	45000	51000	101000	119000	35000	14900
	306 R4	**590**	0.85	9500	0.95	24	71-80-90-100-112-132-160	45000	51000	101000	119000	35000	14900
	306 R4	**665**	0.75	7000	0.62	24	71-80-90-100-112-132-160	45000	51000	101000	119000	35000	14900
	306 R4	**830**	0.60	7000	0.50	24	71-80-90-100-112-132-160	45000	51000	101000	119000	35000	14900

307 R — 314 — 14000 Nm

n_1 min^{-1}		i	n_2 min^{-1}	M_{n2} Nm	P_{n1} kW	Pt kW	P (IEC)	Rn_2 [N] MC	MZ	HC/PC	HZ/PZ	FZ	$M_{2\,max}$ Nm
1500	**307 R2**	**13.0**	116	5110	66	35	132-160-180-200	10600	13300	26500	34700	9230	18600
	307 R2	**15.5**	97	6090	66	35	132-160-180-200	11300	14100	27900	36600	9790	21000
	307 R2	**19.8**	76	7820	66	35	132-160-180-200	12200	15400	30100	39400	10600	21000
	307 R2	**23.5**	64	7970	57	35	132-160-180-200	13000	16300	31700	41500	11300	21000
	307 R3	**31.6**	47	5570	30	22	71-80-90-100-112-132-160	14300	17900	34600	45400	12400	18600
	307 R3	**37.7**	40	6650	30	22	71-80-90-100-112-132-160	15200	19000	36500	47800	13200	21000
	307 R3	**44.6**	34	7860	30	22	71-80-90-100-112-132-160	16000	20100	38400	50300	13900	21000
	307 R3	**55.9**	26.8	9860	30	22	71-80-90-100-112-132-160	17300	21700	41100	53800	15000	21000
	307 R3	**65.0**	23.1	11000	29	22	71-80-90-100-112-132-160	18200	22800	43000	56300	15800	21000
	307 R3	**71.8**	20.9	10100	24	22	71-80-90-100-112-132-160	18800	23600	44300	58000	16300	21000
	307 R3	**78.6**	19.1	11100	24	22	71-80-90-100-112-132-160	19400	24300	45500	59600	16800	21000
	307 R3	**83.4**	18.0	10200	21	22	71-80-90-100-112-132-160	19800	24800	46300	60700	17200	21000
	307 R3	**99.0**	15.2	8580	14.9	22	71-80-90-100-112-132-160	20900	26200	48800	63900	18200	21000
	307 R3	**120**	12.5	8630	12.4	22	71-80-90-100-112-132-160	22300	28000	51600	67600	19400	21000
	307 R4	**152**	9.9	13500	15.0	15.0	71-80-90-100-112-132-160	24100	30300	55400	72700	21000	21000
	307 R4	**165**	9.1	10900	11.7	15.0	71-80-90-100-112-132-160	24800	31100	56900	74500	21600	21000
	307 R4	**191**	7.9	14000	13.0	15.0	71-80-90-100-112-132-160	26000	32700	59400	77800	22600	21000
	307 R4	**206**	7.3	14100	12.2	15.0	71-80-90-100-112-132-160	26700	33500	60700	79600	23200	21000
	307 R4	**232**	6.5	11100	8.5	15.0	71-80-90-100-112-132-160	27800	34900	63000	82500	24200	21000
	307 R4	**258**	5.8	14600	10.0	15.0	71-80-90-100-112-132-160	28800	36100	65000	85200	25000	21000
	307 R4	**284**	5.3	11300	7.0	15.0	71-80-90-100-112-132-160	29700	37300	66900	87700	25900	21000
	307 R4	**300**	5.0	14000	8.3	15.0	71-80-90-100-112-132-160	30300	38000	68000	89100	26300	21000
	307 R4	**331**	4.5	11500	6.2	15.0	71-80-90-100-112-132-160	31300	39300	70000	91800	27200	21000
	307 R4	**363**	4.1	12300	6.0	15.0	71-80-90-100-112-132-160	32300	40500	72000	94300	28000	21000
	307 R4	**413**	3.6	11900	5.1	15.0	71-80-90-100-112-132-160	33700	42300	74900	98100	29300	21000
	307 R4	**453**	3.3	13400	5.3	15.0	71-80-90-100-112-132-160	34700	43600	76900	100800	30200	21000
	307 R4	**490**	3.1	9330	3.4	15.0	71-80-90-100-112-132-160	35700	44700	78800	103300	31000	21000
	307 R4	**581**	2.6	12600	3.9	15.0	71-80-90-100-112-132-160	37700	47400	82900	108700	32800	21000
	307 R4	**690**	2.2	9800	2.5	15.0	71-80-90-100-112-132-160	40000	50100	87300	114400	34700	21000
1000	**307 R2**	**13.0**	77	5770	50	42	132-160-180-200	12200	15300	29900	39200	10600	18600
	307 R2	**15.5**	65	6880	50	42	132-160-180-200	12900	16200	31500	41300	11200	21000
	307 R2	**19.8**	50	8830	50	42	132-160-180-200	14000	17600	34000	44500	12200	21000
	307 R2	**23.5**	42	8290	39	42	132-160-180-200	14800	18600	35800	46900	12900	21000

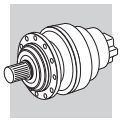

307 R

314

14000 Nm

n_1 min^{-1}		i	n_2 min^{-1}	M_{n2} Nm	P_{n1} kW	Pt kW	P (IEC)	Rn_2 [N] MC	MZ	HC/PC	HZ/PZ	FZ	$M_{2\,max}$ Nm
1000	**307 R3**	**31.6**	32	6180	22	26	71-80-90-100-112-132-160	16400	20500	39100	51200	14200	18600
	307 R3	**37.7**	26.5	7510	23	26	71-80-90-100-112-132-160	17400	21800	41200	54000	15100	21000
	307 R3	**44.6**	22.4	8870	23	26	71-80-90-100-112-132-160	18400	23000	43300	56800	16000	21000
	307 R3	**55.9**	17.9	11100	23	26	71-80-90-100-112-132-160	19800	24800	46400	60800	17200	21000
	307 R3	**65.0**	15.4	12200	21	26	71-80-90-100-112-132-160	20800	26100	48500	63600	18100	21000
	307 R3	**71.8**	13.9	10500	16.7	26	71-80-90-100-112-132-160	21500	27000	50000	65500	18700	21000
	307 R3	**78.6**	12.7	11800	17.3	26	71-80-90-100-112-132-160	22200	27800	51400	67300	19300	21000
	307 R3	**83.4**	12.0	10600	14.6	26	71-80-90-100-112-132-160	22600	28400	52300	68500	19700	21000
	307 R3	**99.0**	10.1	8700	10.1	26	71-80-90-100-112-132-160	23900	30000	55100	72200	20800	21000
	307 R3	**120**	8.4	8700	8.3	26	71-80-90-100-112-132-160	25500	32000	58300	76400	22200	21000
	307 R4	**152**	6.6	14300	11.2	18.0	71-80-90-100-112-132-160	27600	34700	62600	82100	24000	21000
	307 R4	**165**	6.1	11200	8.0	18.0	71-80-90-100-112-132-160	28400	35600	64200	84100	24700	21000
	307 R4	**191**	5.2	14800	9.2	18.0	71-80-90-100-112-132-160	29800	37400	67000	87800	25900	21000
	307 R4	**206**	4.9	14900	8.6	18.0	71-80-90-100-112-132-160	30600	38300	68600	89900	26600	21000
	307 R4	**232**	4.3	11600	5.9	18.0	71-80-90-100-112-132-160	31800	39900	71100	93200	27700	21000
	307 R4	**258**	3.9	14900	6.8	18.0	71-80-90-100-112-132-160	33000	41400	73400	96200	28600	21000
	307 R4	**284**	3.5	12000	5.0	18.0	71-80-90-100-112-132-160	34000	42700	75600	99000	29600	21000
	307 R4	**300**	3.3	14000	5.5	18.0	71-80-90-100-112-132-160	34700	43500	76800	100600	30100	21000
	307 R4	**331**	3.0	12300	4.4	18.0	71-80-90-100-112-132-160	35800	44900	79100	103700	31100	21000
	307 R4	**363**	2.8	12300	4.0	18.0	71-80-90-100-112-132-160	36900	46300	81300	106500	32100	21000
	307 R4	**413**	2.4	12800	3.7	18.0	71-80-90-100-112-132-160	38600	48400	84500	110800	33500	21000
	307 R4	**453**	2.2	14000	3.6	18.0	71-80-90-100-112-132-160	39800	49900	86900	113900	34600	21000
	307 R4	**490**	2.0	9900	2.4	18.0	71-80-90-100-112-132-160	40800	51200	89000	116600	35500	21000
	307 R4	**581**	1.7	13300	2.7	18.0	71-80-90-100-112-132-160	43200	54200	93600	122700	37600	21000
	307 R4	**690**	1.4	10400	1.8	18.0	71-80-90-100-112-132-160	45700	57400	98600	129200	39800	21000
500	**307 R2**	**13.0**	39	6780	29	70	132-160-180-200	15300	19200	36800	48300	13300	18600
	307 R2	**15.5**	32	7950	29	70	132-160-180-200	16200	20400	38800	50900	14100	21000
	307 R2	**19.8**	25.2	9630	27	70	132-160-180-200	17700	22200	41900	54800	15300	21000
	307 R2	**23.5**	21.2	8480	20	70	132-160-180-200	18700	23500	44100	57700	16200	21000
	307 R3	**31.6**	15.8	7380	13.4	44	71-80-90-100-112-132-160	20600	25900	48100	63100	17900	18600
	307 R3	**37.7**	13.2	9250	14.1	44	71-80-90-100-112-132-160	21900	27400	50800	66500	19000	21000
	307 R3	**44.6**	11.2	10900	14.1	44	71-80-90-100-112-132-160	23100	29000	53400	69900	20100	21000
	307 R3	**55.9**	8.9	13500	13.9	44	71-80-90-100-112-132-160	24900	31300	57100	74800	21700	21000
	307 R3	**65.0**	7.7	13700	12.1	44	71-80-90-100-112-132-160	26200	32900	59800	78300	22800	21000
	307 R3	**71.8**	7.0	11100	8.8	44	71-80-90-100-112-132-160	27100	34000	61600	80700	23600	21000
	307 R3	**78.6**	6.4	12300	9.0	44	71-80-90-100-112-132-160	27900	35100	63300	82900	24300	21000
	307 R3	**83.4**	6.0	11200	7.7	44	71-80-90-100-112-132-160	28500	35800	64400	84400	24800	21000
	307 R3	**99.0**	5.1	8700	5.0	44	71-80-90-100-112-132-160	30200	37900	67800	88800	26200	21000
	307 R3	**120**	4.2	8930	4.3	44	71-80-90-100-112-132-160	32100	40300	71800	94100	27900	21000
	307 R4	**152**	3.3	14900	5.8	30	71-80-90-100-112-132-160	34800	43700	77100	101000	30300	21000
	307 R4	**165**	3.0	12300	4.4	30	71-80-90-100-112-132-160	35800	44900	79100	103600	31100	21000
	307 R4	**191**	2.6	14900	4.6	30	71-80-90-100-112-132-160	37500	47100	82500	108100	32600	21000
	307 R4	**206**	2.4	14900	4.3	30	71-80-90-100-112-132-160	38500	48300	84400	110600	33500	21000
	307 R4	**232**	2.2	13000	3.3	30	71-80-90-100-112-132-160	40100	50300	87600	114700	34800	21000
	307 R4	**258**	1.9	15100	3.5	30	71-80-90-100-112-132-160	41500	52100	90400	118400	36100	21000
	307 R4	**284**	1.8	13500	2.8	30	71-80-90-100-112-132-160	42900	53800	93100	121900	37300	21000
	307 R4	**300**	1.7	14400	2.8	30	71-80-90-100-112-132-160	43700	54800	94500	123900	38000	21000
	307 R4	**331**	1.5	13800	2.5	30	71-80-90-100-112-132-160	45100	56600	97400	127600	39200	21000
	307 R4	**363**	1.4	12300	2.0	30	71-80-90-100-112-132-160	46500	58400	100100	131200	40400	21000
	307 R4	**413**	1.2	14400	2.1	30	71-80-90-100-112-132-160	48600	61000	104100	136400	42200	21000
	307 R4	**453**	1.1	14900	1.9	30	71-80-90-100-112-132-160	50100	62800	107000	140200	43500	21000
	307 R4	**490**	1.0	11000	1.3	30	71-80-90-100-112-132-160	51400	64500	109000	143600	44700	21000
	307 R4	**581**	0.86	14300	1.5	30	71-80-90-100-112-132-160	52000	65000	109000	145000	45000	21000
	307 R4	**690**	0.72	11000	0.94	30	71-80-90-100-112-132-160	52000	65000	109000	145000	45000	21000

B

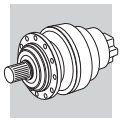

309 R

326

16460 Nm

n_1 min^{-1}		i	n_2 min^{-1}	M_{n2} Nm	P_{n1} kW	Pt kW	P (IEC)	Rn_2 [N] MC	MZ	HC/PC	HZ/PZ	FZ	$M_{2\,max}$ Nm
1500	**309 R2**	**13.0**	116	5110	66	35	132-160-180-200	—	—	26900	34700	7390	27400
	309 R2	**15.5**	97	6090	66	35	132-160-180-200	—	—	28400	36600	7830	27400
	309 R2	**19.8**	76	7820	66	35	132-160-180-200	—	—	30600	39400	8510	27400
	309 R2	**23.5**	64	9280	66	35	132-160-180-200	—	—	32200	41500	9010	27400
	309 R3	**31.6**	47	5580	30	22	71-80-90-100-112-132-160	—	—	35200	45400	9950	27900
	309 R3	**37.7**	40	6650	30	22	71-80-90-100-112-132-160	—	—	37100	47800	10500	29000
	309 R3	**44.6**	34	7860	30	22	71-80-90-100-112-132-160	—	—	39000	50300	11100	29000
	309 R3	**55.9**	26.8	9860	30	22	71-80-90-100-112-132-160	—	—	41700	53800	12000	29000
	309 R3	**65.0**	23.1	11200	30	22	71-80-90-100-112-132-160	—	—	43700	56300	12600	29000
	309 R3	**71.8**	20.9	12700	30	22	71-80-90-100-112-132-160	—	—	45000	58000	13100	29000
	309 R3	**83.4**	18.0	14000	29	22	71-80-90-100-112-132-160	—	—	47100	60700	13700	29000
	309 R3	**99.0**	15.2	12800	22	22	71-80-90-100-112-132-160	—	—	49500	63900	14500	29000
	309 R3	**120**	12.5	12900	18.6	22	71-80-90-100-112-132-160	—	—	52500	67600	15500	29000
	309 R4	**152**	9.9	18600	15.0	15.0	71-80-90-100-112-132-160	—	—	56300	72700	16800	29000
	309 R4	**165**	9.1	16300	15.0	15.0	71-80-90-100-112-132-160	—	—	57800	74500	17300	29000
	309 R4	**191**	7.9	17300	15.0	15.0	71-80-90-100-112-132-160	—	—	60300	77800	18100	29000
	309 R4	**206**	7.3	19800	15.0	15.0	71-80-90-100-112-132-160	—	—	61700	79600	18600	29000
	309 R4	**232**	6.5	16700	12.7	15.0	71-80-90-100-112-132-160	—	—	64000	82500	19300	29000
	309 R4	**258**	5.8	17400	12.0	15.0	71-80-90-100-112-132-160	—	—	66000	85200	20000	29000
	309 R4	**284**	5.3	16900	10.5	15.0	71-80-90-100-112-132-160	—	—	68000	87700	20700	29000
	309 R4	**331**	4.5	17200	9.2	15.0	71-80-90-100-112-132-160	—	—	71200	91800	21800	29000
	309 R4	**374**	4.0	14300	6.8	15.0	71-80-90-100-112-132-160	—	—	73800	95200	22700	29000
	309 R4	**413**	3.6	17900	7.7	15.0	71-80-90-100-112-132-160	—	—	76100	98100	23400	29000
	309 R4	**457**	3.3	13800	5.4	15.0	71-80-90-100-112-132-160	—	—	78400	101100	24200	29000
	309 R4	**490**	3.1	14000	5.1	15.0	71-80-90-100-112-132-160	—	—	80100	103300	24800	29000
	309 R4	**581**	2.6	15800	4.8	15.0	71-80-90-100-112-132-160	—	—	84300	108700	26200	29000
	309 R4	**690**	2.2	14800	3.8	15.0	71-80-90-100-112-132-160	—	—	88700	114400	27800	29000
1000	**309 R2**	**13.0**	77	5770	50	42	132-160-180-200	—	—	30400	39200	8450	27400
	309 R2	**15.5**	65	6880	50	42	132-160-180-200	—	—	32100	41300	8970	27400
	309 R2	**19.8**	50	8830	50	42	132-160-180-200	—	—	34500	44500	9740	27400
	309 R2	**23.5**	42	10200	48	42	132-160-180-200	—	—	36400	46900	10300	27400
	309 R3	**31.6**	32	6300	23	26	71-80-90-100-112-132-160	—	—	39700	51200	11400	27900
	309 R3	**37.7**	26.5	7510	23	26	71-80-90-100-112-132-160	—	—	41900	54000	12100	29000
	309 R3	**44.6**	22.4	8870	23	26	71-80-90-100-112-132-160	—	—	44000	56800	12800	29000
	309 R3	**55.9**	17.9	11100	23	26	71-80-90-100-112-132-160	—	—	47100	60800	13800	29000
	309 R3	**65.0**	15.4	12500	22	26	71-80-90-100-112-132-160	—	—	49300	63600	14500	29000
	309 R3	**71.8**	13.9	14300	23	26	71-80-90-100-112-132-160	—	—	50800	65500	15000	29000
	309 R3	**83.4**	12.0	15500	21	26	71-80-90-100-112-132-160	—	—	53100	68500	15700	29000
	309 R3	**99.0**	10.1	13000	15.1	26	71-80-90-100-112-132-160	—	—	56000	72200	16700	29000
	309 R3	**120**	8.4	13000	12.5	26	71-80-90-100-112-132-160	—	—	59200	76400	17700	29000
	309 R4	**152**	6.6	20200	15.0	18.0	71-80-90-100-112-132-160	—	—	63600	82100	19200	29000
	309 R4	**165**	6.1	16700	12.0	18.0	71-80-90-100-112-132-160	—	—	65200	84100	19800	29000
	309 R4	**191**	5.2	17500	10.8	18.0	71-80-90-100-112-132-160	—	—	68100	87800	20700	29000
	309 R4	**206**	4.9	21300	12.2	18.0	71-80-90-100-112-132-160	—	—	69700	89900	21200	29000
	309 R4	**232**	4.3	17200	8.8	18.0	71-80-90-100-112-132-160	—	—	72300	93200	22100	29000
	309 R4	**258**	3.9	17500	8.0	18.0	71-80-90-100-112-132-160	—	—	74600	96200	22900	29000
	309 R4	**284**	3.5	17500	7.3	18.0	71-80-90-100-112-132-160	—	—	76800	99000	23700	29000
	309 R4	**331**	3.0	18500	6.6	18.0	71-80-90-100-112-132-160	—	—	80400	103700	24900	29000
	309 R4	**374**	2.7	14300	4.5	18.0	71-80-90-100-112-132-160	—	—	83400	107500	25900	29000
	309 R4	**413**	2.4	19200	5.5	18.0	71-80-90-100-112-132-160	—	—	85900	110800	26800	29000
	309 R4	**457**	2.2	14800	3.8	18.0	71-80-90-100-112-132-160	—	—	88500	114200	27700	29000
	309 R4	**490**	2.0	14900	3.6	18.0	71-80-90-100-112-132-160	—	—	90400	116600	28400	29000
	309 R4	**581**	1.7	15800	3.2	18.0	71-80-90-100-112-132-160	—	—	95200	122700	30000	29000
	309 R4	**690**	1.4	15900	2.7	18.0	71-80-90-100-112-132-160	—	—	100200	129200	31800	29000
500	**309 R2**	**13.0**	39	6780	29	70	132-160-180-200	—	—	37400	48300	10700	27400
	309 R2	**15.5**	32	7950	29	70	132-160-180-200	—	—	39500	50900	11300	27400
	309 R2	**19.8**	25.2	10200	29	70	132-160-180-200	—	—	42500	54800	12300	27400
	309 R2	**23.5**	21.2	11200	26	70	132-160-180-200	—	—	44800	57700	13000	27400

B

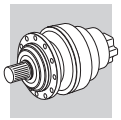

309 R

326

16460 Nm

n_1 min^{-1}		i	n_2 min^{-1}	M_{n2} Nm	P_{n1} kW	Pt kW	P (IEC)	Rn_2 [N] MC	MZ	HC/PC	HZ/PZ	FZ	$M_{2\,max}$ Nm
500	**309 R3**	**31.6**	15.8	7760	14.1	44	71-80-90-100-112-132-160	—	—	48900	63100	14300	27900
	309 R3	**37.7**	13.2	9250	14.1	44	71-80-90-100-112-132-160	—	—	51600	66500	15200	29000
	309 R3	**44.6**	11.2	10900	14.1	44	71-80-90-100-112-132-160	—	—	54200	69900	16100	29000
	309 R3	**55.9**	8.9	13700	14.1	44	71-80-90-100-112-132-160	—	—	58000	74800	17300	29000
	309 R3	**65.0**	7.7	14100	12.5	44	71-80-90-100-112-132-160	—	—	60700	78300	18200	29000
	309 R3	**71.8**	7.0	16400	13.1	44	71-80-90-100-112-132-160	—	—	62500	80700	18800	29000
	309 R3	**83.4**	6.0	16700	11.5	44	71-80-90-100-112-132-160	—	—	65400	84400	19800	29000
	309 R3	**99.0**	5.1	13000	7.5	44	71-80-90-100-112-132-160	—	—	68900	88800	21000	29000
	309 R3	**120**	4.2	13400	6.4	44	71-80-90-100-112-132-160	—	—	72900	94100	22400	29000
	309 R4	**152**	3.3	21300	8.3	30	71-80-90-100-112-132-160	—	—	78300	101000	24200	29000
	309 R4	**165**	3.0	18400	6.6	30	71-80-90-100-112-132-160	—	—	80300	103600	24900	29000
	309 R4	**191**	2.6	17500	5.4	30	71-80-90-100-112-132-160	—	—	83900	108100	26100	29000
	309 R4	**206**	2.4	21300	6.1	30	71-80-90-100-112-132-160	—	—	85800	110600	26800	29000
	309 R4	**232**	2.2	18100	4.6	30	71-80-90-100-112-132-160	—	—	89000	114700	27900	29000
	309 R4	**258**	1.9	17800	4.1	30	71-80-90-100-112-132-160	—	—	91800	118400	28900	29000
	309 R4	**284**	1.8	18200	3.8	30	71-80-90-100-112-132-160	—	—	94500	121900	29800	29000
	309 R4	**331**	1.5	20600	3.7	30	71-80-90-100-112-132-160	—	—	99000	127600	31400	29000
	309 R4	**374**	1.3	14600	2.3	30	71-80-90-100-112-132-160	—	—	102700	132400	32700	29000
	309 R4	**413**	1.2	21300	3.1	30	71-80-90-100-112-132-160	—	—	105800	136400	33800	29000
	309 R4	**457**	1.1	16700	2.2	30	71-80-90-100-112-132-160	—	—	109000	140600	34900	29000
	309 R4	**490**	1.0	16900	2.0	30	71-80-90-100-112-132-160	—	—	110000	143600	35800	29000
	309 R4	**581**	0.86	15800	1.6	30	71-80-90-100-112-132-160	—	—	110000	145000	36000	29000
	309 R4	**690**	0.72	17000	1.5	30	71-80-90-100-112-132-160	—	—	110000	145000	36000	29000

310 R

338

34120 Nm

n_1 min^{-1}		i	n_2 min^{-1}	M_{n2} Nm	P_{n1} kW	Pt kW	P (IEC)	Rn_2 [N] MC	MZ	HC/PC	HZ/PZ	FZ	$M_{2\,max}$ Nm
1500	**310 R2 (B)**	**12.0**	125	10100	130	55	160-180-200-225	—	—	31200	39200	13000	47600
	310 R2 (B)	**15.4**	97	10700	115	55	160-180-200-225	—	—	33600	42300	14100	47600
	310 R2 (B)	**18.3**	82	11100	101	55	160-180-200-225	—	—	35400	44500	15000	47600
	310 R2 (C)	**16.6**	90	11200	112	55	160-180-200-225-250	—	—	34400	43200	14500	47600
	310 R2 (C)	**21.3**	70	11800	92	55	160-180-200-225-250	—	—	37100	46600	15800	47600
	310 R2 (C)	**25.3**	59	12200	81	55	160-180-200-225-250	—	—	39000	49000	16700	47600
	310 R3	**37.7**	40	6650	30	22	71-80-90-100-112-132-160	—	—	44000	55300	19000	47600
	310 R3	**44.6**	34	7860	30	22	71-80-90-100-112-132-160	—	—	46200	58100	20100	47600
	310 R3	**55.9**	26.8	9860	30	22	71-80-90-100-112-132-160	—	—	49500	62200	21700	47600
	310 R3	**65.0**	23.1	11500	30	22	71-80-90-100-112-132-160	—	—	51700	65100	22800	47600
	310 R3	**71.8**	20.9	12700	30	22	71-80-90-100-112-132-160	—	—	53300	67000	23600	47600
	310 R3	**78.6**	19.1	13900	30	22	71-80-90-100-112-132-160	—	—	54800	68900	24300	47600
	310 R3	**83.4**	18.0	14700	30	22	71-80-90-100-112-132-160	—	—	55800	70100	24800	47600
	310 R3	**99.0**	15.2	16400	29	22	71-80-90-100-112-132-160	—	—	58700	73800	26300	47600
	310 R3	**120**	12.5	17400	25	22	71-80-90-100-112-132-160	—	—	62200	78200	28000	47600
	310 R4	**136**	11.0	21000	27	15.0	71-80-90-100-112-132-160	—	—	64600	81200	29200	47600
	310 R4	**160**	9.4	22000	24	15.0	71-80-90-100-112-132-160	—	—	67800	85300	30900	47600
	310 R4	**189**	7.9	23200	22	15.0	71-80-90-100-112-132-160	—	—	71300	89700	32600	47600
	310 R4	**206**	7.3	22100	19.0	15.0	71-80-90-100-112-132-160	—	—	73100	91900	33500	47600
	310 R4	**234**	6.4	24700	18.7	15.0	71-80-90-100-112-132-160	—	—	76000	95600	35000	47600
	310 R4	**258**	5.8	22800	15.7	15.0	71-80-90-100-112-132-160	—	—	78300	98400	36200	47600
	310 R4	**283**	5.3	26100	16.4	15.0	71-80-90-100-112-132-160	—	—	80500	101200	37300	47600
	310 R4	**305**	4.9	23400	13.6	15.0	71-80-90-100-112-132-160	—	—	82300	103500	38200	47600
	310 R4	**334**	4.5	27400	14.6	15.0	71-80-90-100-112-132-160	—	—	84600	106300	39400	47600
	310 R4	**363**	4.1	24100	11.8	15.0	71-80-90-100-112-132-160	—	—	86700	109000	40500	47600
	310 R4	**419**	3.6	29000	12.3	15.0	71-80-90-100-112-132-160	—	—	90500	113800	42500	47600
	310 R4	**454**	3.3	20000	7.8	15.0	71-80-90-100-112-132-160	—	—	92700	116600	43600	47600
	310 R4	**517**	2.9	25600	8.8	15.0	71-80-90-100-112-132-160	—	—	96400	121200	45600	47600
	310 R4	**590**	2.5	21800	6.6	15.0	71-80-90-100-112-132-160	—	—	100300	126100	47600	47600
	310 R4	**639**	2.3	21500	6.0	15.0	71-80-90-100-112-132-160	—	—	102700	129100	48900	47600
	310 R4	**757**	2.0	26400	6.2	15.0	71-80-90-100-112-132-160	—	—	108100	135900	51700	47600

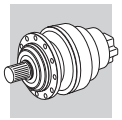

310 R

338

34120 Nm

n_1 min^{-1}		i	n_2 min^{-1}	M_{n2} Nm	P_{n1} kW	Pt kW	P (IEC)	Rn_2 [N] MC	MZ	HC/PC	HZ/PZ	FZ	$M_{2\,max}$ Nm
	310 R4	**898**	1.7	23200	4.6	15.0	71-80-90-100-112-132-160	—	—	113800	143100	54800	47600
1000	**310 R2 (B)**	**12.0**	83	11400	106	66	160-180-200-225	—	—	35200	44300	14900	47600
	310 R2 (B)	**15.4**	65	12000	87	66	160-180-200-225	—	—	38000	47700	16200	47600
	310 R2 (B)	**18.3**	55	12500	76	66	160-180-200-225	—	—	40000	50200	17100	47600
	310 R2 (C)	**16.6**	60	12600	84	66	160-180-200-225-250	—	—	38800	48800	16600	47600
	310 R2 (C)	**21.3**	47	13300	69	66	160-180-200-225-250	—	—	41800	52600	18000	47600
	310 R2 (C)	**25.3**	39	13500	59	66	160-180-200-225-250	—	—	44100	55400	19100	47600
	310 R3	**37.7**	26.5	7510	23	26	71-80-90-100-112-132-160	—	—	49600	62400	21800	47600
	310 R3	**44.6**	22.4	8870	23	26	71-80-90-100-112-132-160	—	—	52200	65600	23000	47600
	310 R3	**55.9**	17.9	11100	23	26	71-80-90-100-112-132-160	—	—	55900	70200	24900	47600
	310 R3	**65.0**	15.4	12900	23	26	71-80-90-100-112-132-160	—	—	58400	73500	26100	47600
	310 R3	**71.8**	13.9	14300	23	26	71-80-90-100-112-132-160	—	—	60200	75700	27000	47600
	310 R3	**78.6**	12.7	15700	23	26	71-80-90-100-112-132-160	—	—	61900	77800	27800	47600
	310 R3	**83.4**	12.0	16600	23	26	71-80-90-100-112-132-160	—	—	63000	79200	28400	47600
	310 R3	**99.0**	10.1	18200	21	26	71-80-90-100-112-132-160	—	—	66300	83400	30100	47600
	310 R3	**120**	8.4	18300	17.5	26	71-80-90-100-112-132-160	—	—	70200	88300	32000	47600
	310 R4	**136**	7.4	23700	21	18.0	71-80-90-100-112-132-160	—	—	72900	91700	33400	47600
	310 R4	**160**	6.2	24900	18.3	18.0	71-80-90-100-112-132-160	—	—	76600	96400	35300	47600
	310 R4	**189**	5.3	26100	16.3	18.0	71-80-90-100-112-132-160	—	—	80500	101300	37300	47600
	310 R4	**206**	4.9	23500	13.5	18.0	71-80-90-100-112-132-160	—	—	82600	103800	38400	47600
	310 R4	**234**	4.3	27800	14.0	18.0	71-80-90-100-112-132-160	—	—	85800	107900	40100	47600
	310 R4	**258**	3.9	24400	11.2	18.0	71-80-90-100-112-132-160	—	—	88400	111200	41400	47600
	310 R4	**283**	3.5	29300	12.3	18.0	71-80-90-100-112-132-160	—	—	90900	114300	42700	47600
	310 R4	**305**	3.3	25100	9.7	18.0	71-80-90-100-112-132-160	—	—	92900	116800	43800	47600
	310 R4	**334**	3.0	30700	10.9	18.0	71-80-90-100-112-132-160	—	—	95500	120100	45100	47600
	310 R4	**363**	2.8	25800	8.4	18.0	71-80-90-100-112-132-160	—	—	97900	123100	46400	47600
	310 R4	**419**	2.4	32000	9.0	18.0	71-80-90-100-112-132-160	—	—	102200	128600	48700	47600
	310 R4	**454**	2.2	21800	5.7	18.0	71-80-90-100-112-132-160	—	—	104700	131700	50000	47600
	310 R4	**517**	1.9	27400	6.3	18.0	71-80-90-100-112-132-160	—	—	108900	136900	52200	47600
	310 R4	**590**	1.7	21800	4.4	18.0	71-80-90-100-112-132-160	—	—	113200	142400	54500	47600
	310 R4	**639**	1.6	23500	4.4	18.0	71-80-90-100-112-132-160	—	—	116000	145800	56000	47600
	310 R4	**757**	1.3	27300	4.3	18.0	71-80-90-100-112-132-160	—	—	122000	153500	59200	47600
	310 R4	**898**	1.1	25400	3.3	18.0	71-80-90-100-112-132-160	—	—	128500	161600	62700	47600
500	**310 R2 (B)**	**12.0**	42	14100	65	110	160-180-200-225	—	—	43400	54500	18800	47600
	310 R2 (B)	**15.4**	32	14800	53	110	160-180-200-225	—	—	46700	58800	20400	47600
	310 R2 (B)	**18.3**	27.3	14700	45	110	160-180-200-225	—	—	49200	61900	21600	47600
	310 R2 (C)	**16.6**	30	15500	52	110	160-180-200-225-250	—	—	47800	60100	20900	47600
	310 R2 (C)	**21.3**	23.4	16300	43	110	160-180-200-225-250	—	—	51500	64800	22700	47600
	310 R2 (C)	**25.3**	19.7	15700	35	110	160-180-200-225-250	—	—	54200	68200	24100	47600
	310 R3	**37.7**	13.2	9250	14.1	44	71-80-90-100-112-132-160	—	—	61100	76900	27500	47600
	310 R3	**44.6**	11.2	10900	14.1	44	71-80-90-100-112-132-160	—	—	64200	80800	29000	47600
	310 R3	**55.9**	8.9	13700	14.1	44	71-80-90-100-112-132-160	—	—	68800	86500	31300	47600
	310 R3	**65.0**	7.7	15900	14.1	44	71-80-90-100-112-132-160	—	—	71900	90500	32900	47600
	310 R3	**71.8**	7.0	17600	14.1	44	71-80-90-100-112-132-160	—	—	74100	93200	34000	47600
	310 R3	**78.6**	6.4	18900	13.8	44	71-80-90-100-112-132-160	—	—	76200	95800	35100	47600
	310 R3	**83.4**	6.0	20500	14.1	44	71-80-90-100-112-132-160	—	—	77500	97500	35800	47600
	310 R3	**99.0**	5.1	18400	10.7	44	71-80-90-100-112-132-160	—	—	81600	102600	37900	47600
	310 R3	**120**	4.2	19100	9.2	44	71-80-90-100-112-132-160	—	—	86400	108700	40400	47600
	310 R4	**136**	3.7	29000	12.6	30	71-80-90-100-112-132-160	—	—	89800	112900	42100	47600
	310 R4	**160**	3.1	30400	11.2	30	71-80-90-100-112-132-160	—	—	94300	118600	44500	47600
	310 R4	**189**	2.6	31800	9.9	30	71-80-90-100-112-132-160	—	—	99200	124700	47000	47600
	310 R4	**206**	2.4	26400	7.6	30	71-80-90-100-112-132-160	—	—	101700	127800	48400	47600
	310 R4	**234**	2.1	32600	8.2	30	71-80-90-100-112-132-160	—	—	105700	132900	50500	47600
	310 R4	**258**	1.9	27400	6.3	30	71-80-90-100-112-132-160	—	—	108800	136900	52200	47600
	310 R4	**283**	1.8	33000	6.9	30	71-80-90-100-112-132-160	—	—	111900	140700	53800	47600
	310 R4	**305**	1.6	28200	5.5	30	71-80-90-100-112-132-160	—	—	114400	143800	55100	47600
	310 R4	**334**	1.5	33300	5.9	30	71-80-90-100-112-132-160	—	—	117600	147800	56800	47600
	310 R4	**363**	1.4	29000	4.7	30	71-80-90-100-112-132-160	—	—	120600	151600	58400	47600
	310 R4	**419**	1.2	33700	4.8	30	71-80-90-100-112-132-160	—	—	125900	158300	61300	47600

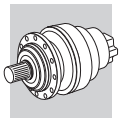

310 R — 338 — 34120 Nm

n_1 min^{-1}		i	n_2 min^{-1}	M_{n2} Nm	P_{n1} kW	Pt kW	P (IEC)	Rn_2 [N] MC	MZ	HC/PC	HZ/PZ	FZ	$M_{2\,max}$ Nm
500	**310 R4**	**454**	1.1	25400	3.3	30	71-80-90-100-112-132-160	—	—	128900	162100	62900	47600
	310 R4	**517**	0.97	30600	3.5	30	71-80-90-100-112-132-160	—	—	133000	166000	65000	47600
	310 R4	**590**	0.85	21800	2.2	30	71-80-90-100-112-132-160	—	—	133000	166000	65000	47600
	310 R4	**639**	0.78	26000	2.4	30	71-80-90-100-112-132-160	—	—	133000	166000	65000	47600
	310 R4	**757**	0.66	28000	2.2	30	71-80-90-100-112-132-160	—	—	133000	166000	65000	47600
	310 R4	**898**	0.56	26000	1.7	30	71-80-90-100-112-132-160	—	—	133000	166000	65000	47600

311 R — 350 — 48330 Nm

n_1 min^{-1}		i	n_2 min^{-1}	M_{n2} Nm	P_{n1} kW	Pt kW	P (IEC)	Rn_2 [N] MC	MZ	HC/PC	HZ/PZ	FZ	$M_{2\,max}$ Nm
1500	**311 R2 (B)**	**12.0**	125	11900	150	75	180-200-225-250	—	—	36900	45900	13000	58300
	311 R2 (B)	**15.4**	97	15400	150	75	180-200-225-250	—	—	39700	49500	14100	58300
	311 R2 (B)	**18.3**	82	16000	146	75	180-200-225-250	—	—	41800	52100	15000	58300
	311 R2 (C)	**16.6**	90	14400	144	90	180-200-225-250	—	—	40600	50600	14500	58300
	311 R2 (C)	**21.3**	70	16900	132	90	180-200-225-250	—	—	43800	54500	15800	58300
	311 R2 (C)	**25.3**	59	17600	116	90	180-200-225-250	—	—	46100	57400	16700	58300
	311 R3	**53.0**	28.3	20300	66	40	132-160-180-200	—	—	57500	71600	21300	58300
	311 R3	**63.2**	23.7	24000	65	40	132-160-180-200	—	—	60600	75500	22600	58300
	311 R3	**68.0**	22.1	24000	61	40	132-160-180-200	—	—	62000	77200	23200	58300
	311 R3	**81.1**	18.5	25900	55	40	132-160-180-200	—	—	65400	81400	24600	58300
	311 R3	**96.3**	15.6	27200	49	40	132-160-180-200	—	—	68800	85700	26000	58300
	311 R3	**104**	14.4	28700	47	40	132-160-180-200	—	—	70400	87700	26700	58300
	311 R3	**124**	12.1	30200	42	40	132-160-180-200	—	—	74100	92400	28300	58300
	311 R3	**147**	10.2	26900	32	40	132-160-180-200	—	—	78100	97200	29900	58300
	311 R4	**154**	9.7	26400	30	22	71-80-90-100-112-132-160	—	—	79300	98700	30500	58300
	311 R4	**182**	8.2	31200	30	22	71-80-90-100-112-132-160	—	—	83300	103800	32200	58300
	311 R4	**198**	7.6	33800	30	22	71-80-90-100-112-132-160	—	—	85400	106400	33100	58300
	311 R4	**229**	6.6	35300	27	22	71-80-90-100-112-132-160	—	—	89200	111100	34700	58300
	311 R4	**266**	5.6	36900	25	22	71-80-90-100-112-132-160	—	—	93300	116200	36500	58300
	311 R4	**294**	5.1	38000	23	22	71-80-90-100-112-132-160	—	—	96100	119700	37700	58300
	311 R4	**322**	4.7	39000	22	22	71-80-90-100-112-132-160	—	—	98800	123100	38900	58300
	311 R4	**341**	4.4	39200	20	22	71-80-90-100-112-132-160	—	—	100600	125300	39700	58300
	311 R4	**413**	3.6	40600	17.4	22	71-80-90-100-112-132-160	—	—	106500	132600	42300	58300
	311 R4	**438**	3.4	37500	15.2	22	71-80-90-100-112-132-160	—	—	108400	135000	43100	58300
	311 R4	**490**	3.1	34500	12.5	22	71-80-90-100-112-132-160	—	—	112100	139600	44800	58300
	311 R4	**520**	2.9	38600	13.2	22	71-80-90-100-112-132-160	—	—	114100	142100	45700	58300
	311 R4	**629**	2.4	39700	11.2	22	71-80-90-100-112-132-160	—	—	120800	150500	48600	58300
	311 R4	**746**	2.0	30500	7.3	22	71-80-90-100-112-132-160	—	—	127200	158400	51500	58300
1000	**311 R2 (B)**	**12.0**	83	13500	125	90	180-200-225-250	—	—	41600	51800	14900	58300
	311 R2 (B)	**15.4**	65	17400	126	90	180-200-225-250	—	—	44900	55900	16200	58300
	311 R2 (B)	**18.3**	55	18100	110	90	180-200-225-250	—	—	47200	58800	17100	58300
	311 R2 (C)	**16.6**	60	16200	109	108	180-200-225-250	—	—	45900	57200	16600	58300
	311 R2 (C)	**21.3**	47	19100	100	108	180-200-225-250	—	—	49500	61600	18000	58300
	311 R2 (C)	**25.3**	39	19500	85	108	180-200-225-250	—	—	52100	64800	19100	58300
	311 R3	**53.0**	18.9	22900	50	48	132-160-180-200	—	—	65000	80900	24400	58300
	311 R3	**63.2**	15.8	27100	49	48	132-160-180-200	—	—	68500	85300	25900	58300
	311 R3	**68.0**	14.7	27100	46	48	132-160-180-200	—	—	70000	87200	26500	58300
	311 R3	**81.1**	12.3	29200	41	48	132-160-180-200	—	—	73800	91900	28100	58300
	311 R3	**96.3**	10.4	30700	37	48	132-160-180-200	—	—	77700	96800	29800	58300
	311 R3	**104**	9.6	32200	35	48	132-160-180-200	—	—	79500	99100	30600	58300
	311 R3	**124**	8.1	33000	31	48	132-160-180-200	—	—	83700	104300	32400	58300
	311 R3	**147**	6.8	27000	21	48	132-160-180-200	—	—	88200	109800	34300	58300
	311 R4	**154**	6.5	29800	23	26	71-80-90-100-112-132-160	—	—	89500	111500	34900	58300
	311 R4	**182**	5.5	35200	23	26	71-80-90-100-112-132-160	—	—	94100	117200	36900	58300
	311 R4	**198**	5.0	38200	23	26	71-80-90-100-112-132-160	—	—	96500	120200	37900	58300
	311 R4	**229**	4.4	39600	21	26	71-80-90-100-112-132-160	—	—	100700	125500	39800	58300

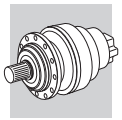

311 R — 350 — 48330 Nm

n_1 min^{-1}		i	n_2 min^{-1}	M_{n2} Nm	P_{n1} kW	Pt kW	P (IEC)	Rn_2 [N] MC	MZ	HC/PC	HZ/PZ	FZ	$M_{2\,max}$ Nm
1000	**311 R4**	**266**	3.8	41200	18.3	26	71-80-90-100-112-132-160	—	—	105400	131300	41800	58300
	311 R4	**294**	3.4	41000	16.5	26	71-80-90-100-112-132-160	—	—	108600	135200	43200	58300
	311 R4	**322**	3.1	43300	15.9	26	71-80-90-100-112-132-160	—	—	111600	139000	44500	58300
	311 R4	**341**	2.9	42200	14.6	26	71-80-90-100-112-132-160	—	—	113600	141500	45400	58300
	311 R4	**413**	2.4	43500	12.5	26	71-80-90-100-112-132-160	—	—	120200	149800	48400	58300
	311 R4	**438**	2.3	40100	10.8	26	71-80-90-100-112-132-160	—	—	122400	152500	49400	58300
	311 R4	**490**	2.0	34700	8.4	26	71-80-90-100-112-132-160	—	—	126600	157700	51200	58300
	311 R4	**520**	1.9	40500	9.2	26	71-80-90-100-112-132-160	—	—	128800	160500	52300	58300
	311 R4	**629**	1.6	41200	7.8	26	71-80-90-100-112-132-160	—	—	136400	169900	55700	58300
	311 R4	**746**	1.3	32500	5.2	26	71-80-90-100-112-132-160	—	—	143600	178900	59000	58300
500	**311 R2 (B)**	**12.0**	42	16700	77	150	180-200-225-250	—	—	51200	63800	18800	58300
	311 R2 (B)	**15.4**	32	21400	77	150	180-200-225-250	—	—	55200	68800	20400	58300
	311 R2 (B)	**18.3**	27.3	21400	65	150	180-200-225-250	—	—	58100	72400	21600	58300
	311 R2 (C)	**16.6**	30	20000	67	180	180-200-225-250	—	—	56500	70400	20900	58300
	311 R2 (C)	**21.3**	23.4	23500	61	180	180-200-225-250	—	—	60900	75800	22700	58300
	311 R2 (C)	**25.3**	19.7	22500	49	180	180-200-225-250	—	—	64100	79800	24100	58300
	311 R3	**53.0**	9.4	28100	30	80	132-160-180-200	—	—	80000	99600	30800	58300
	311 R3	**63.2**	7.9	33400	30	80	132-160-180-200	—	—	84300	105000	32600	58300
	311 R3	**68.0**	7.4	32400	27	80	132-160-180-200	—	—	86200	107400	33400	58300
	311 R3	**81.1**	6.2	36000	25	80	132-160-180-200	—	—	90900	113200	35500	58300
	311 R3	**96.3**	5.2	34300	20	80	132-160-180-200	—	—	95700	119200	37500	58300
	311 R3	**104**	4.8	35500	19.5	80	132-160-180-200	—	—	97900	122000	38500	58300
	311 R3	**124**	4.0	36500	16.9	80	132-160-180-200	—	—	103100	128400	40800	58300
	311 R3	**147**	3.4	28400	11.1	80	132-160-180-200	—	—	108500	135200	43200	58300
	311 R4	**154**	3.2	36700	14.1	44	71-80-90-100-112-132-160	—	—	110200	137300	43900	58300
	311 R4	**182**	2.7	43400	14.1	44	71-80-90-100-112-132-160	—	—	115800	144300	46400	58300
	311 R4	**198**	2.5	43300	12.9	44	71-80-90-100-112-132-160	—	—	118800	148000	47700	58300
	311 R4	**229**	2.2	46200	11.9	44	71-80-90-100-112-132-160	—	—	124000	154500	50100	58300
	311 R4	**266**	1.9	46600	10.4	44	71-80-90-100-112-132-160	—	—	129700	161600	52700	58300
	311 R4	**294**	1.7	44800	9.0	44	71-80-90-100-112-132-160	—	—	133600	166500	54400	58300
	311 R4	**322**	1.6	47100	8.7	44	71-80-90-100-112-132-160	—	—	137400	171100	56100	58300
	311 R4	**341**	1.5	45400	7.9	44	71-80-90-100-112-132-160	—	—	139800	174200	57200	58300
	311 R4	**413**	1.2	46200	6.6	44	71-80-90-100-112-132-160	—	—	148000	184400	61000	58300
	311 R4	**438**	1.1	44300	6.0	44	71-80-90-100-112-132-160	—	—	150700	187700	62200	58300
	311 R4	**490**	1.0	35200	4.2	44	71-80-90-100-112-132-160	—	—	155800	194100	64600	58300
	311 R4	**520**	0.96	43000	4.9	44	71-80-90-100-112-132-160	—	—	157000	195000	65000	58300
	311 R4	**629**	0.80	43000	4.0	44	71-80-90-100-112-132-160	—	—	157000	195000	65000	58300
	311 R4	**746**	0.67	34000	2.7	44	71-80-90-100-112-132-160	—	—	157000	195000	65000	58300

313 R — 362 — 57970 Nm

n_1 min^{-1}		i	n_2 min^{-1}	M_{n2} Nm	P_{n1} kW	Pt kW	P (IEC)	Rn_2 [N] MC	MZ	HC/PC	HZ/PZ	FZ	$M_{2\,max}$ Nm
1500	**313 R2 (B)**	**12.2**	123	12100	150	75	180-200-225-250	—	—	45700	54100	16100	86300
	313 R2 (B)	**15.9**	95	15700	150	75	180-200-225-250	—	—	49500	58600	17600	86300
	313 R2 (B)	**19.1**	79	19100	150	75	180-200-225-250	—	—	52300	61900	18700	86300
	313 R2 (C)	**16.8**	89	14600	144	90	180-200-225-250	—	—	50400	59600	17900	105000
	313 R2 (C)	**22.0**	68	19000	144	90	180-200-225-250	—	—	54600	64600	19600	105000
	313 R2 (C)	**26.4**	57	22800	144	90	180-200-225-250	—	—	57700	68300	20800	105000
	313 R3	**53.7**	28.0	20500	66	40	132-160-180-200	—	—	71300	84400	26400	105000
	313 R3	**64.0**	23.4	24500	66	40	132-160-180-200	—	—	75200	89000	28000	105000
	313 R3	**69.9**	21.4	26700	66	40	132-160-180-200	—	—	77200	91400	28800	105000
	313 R3	**82.2**	18.3	31400	66	40	132-160-180-200	—	—	81100	95900	30400	105000
	313 R3	**97.5**	15.4	37300	66	40	132-160-180-200	—	—	85300	101000	32200	105000
	313 R3	**107**	14.0	38800	62	40	132-160-180-200	—	—	87800	103900	33200	105000
	313 R3	**127**	11.8	40700	55	40	132-160-180-200	—	—	92400	109400	35100	105000
	313 R3	**153**	9.8	39000	44	40	132-160-180-200	—	—	97700	115600	37400	105000

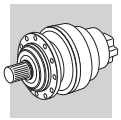

313 R

362

57970 Nm

n_1 min^{-1}		i	n_2 min^{-1}	M_{n2} Nm	P_{n1} kW	Pt kW	P (IEC)	Rn_2 [N] MC	MZ	HC/PC	HZ/PZ	FZ	$M_{2\,max}$ Nm
1500	**313 R4**	**185**	8.1	31600	30	22	71-80-90-100-112-132-160	—	—	103300	122300	39800	105000
	313 R4	**201**	7.5	34300	30	22	71-80-90-100-112-132-160	—	—	106000	125400	40900	105000
	313 R4	**237**	6.3	40500	30	22	71-80-90-100-112-132-160	—	—	111400	131800	43200	105000
	313 R4	**281**	5.3	48100	30	22	71-80-90-100-112-132-160	—	—	117200	138800	45800	105000
	313 R4	**309**	4.9	44500	26	22	71-80-90-100-112-132-160	—	—	120600	142700	47200	105000
	313 R4	**346**	4.3	53000	27	22	71-80-90-100-112-132-160	—	—	124700	147600	49000	105000
	313 R4	**387**	3.9	46700	21	22	71-80-90-100-112-132-160	—	—	129100	152800	50900	105000
	313 R4	**450**	3.3	47700	18.8	22	71-80-90-100-112-132-160	—	—	135100	159800	53600	105000
	313 R4	**496**	3.0	52100	18.6	22	71-80-90-100-112-132-160	—	—	139000	164500	55300	105000
	313 R4	**535**	2.8	48900	16.2	22	71-80-90-100-112-132-160	—	—	142200	168300	56700	105000
	313 R4	**647**	2.3	50400	13.8	22	71-80-90-100-112-132-160	—	—	150500	178100	60400	105000
	313 R4	**778**	1.9	44200	10.1	22	71-80-90-100-112-132-160	—	—	159100	188300	64300	105000
1000	**313 R2 (B)**	**12.2**	82	13700	126	90	180-200-225-250	—	—	51600	61100	18400	86300
	313 R2 (B)	**15.9**	63	17700	124	90	180-200-225-250	—	—	55900	66100	20100	86300
	313 R2 (B)	**19.1**	52	21800	127	90	180-200-225-250	—	—	59100	69900	21400	86300
	313 R2 (C)	**16.8**	59	16400	109	108	180-200-225-250	—	—	56900	67400	20500	105000
	313 R2 (C)	**22.0**	46	21400	109	108	180-200-225-250	—	—	61600	72900	22400	105000
	313 R2 (C)	**26.4**	38	25000	105	108	180-200-225-250	—	—	65100	77100	23800	105000
	313 R3	**53.7**	18.6	23200	50	48	132-160-180-200	—	—	80600	95300	30200	105000
	313 R3	**64.0**	15.6	27700	50	48	132-160-180-200	—	—	84900	100500	32000	105000
	313 R3	**69.9**	14.3	30200	50	48	132-160-180-200	—	—	87200	103200	33000	105000
	313 R3	**82.2**	12.2	35500	50	48	132-160-180-200	—	—	91500	108300	34800	105000
	313 R3	**97.5**	10.3	42100	50	48	132-160-180-200	—	—	96400	114100	36800	105000
	313 R3	**107**	9.3	42800	46	48	132-160-180-200	—	—	99100	117300	38000	105000
	313 R3	**127**	7.9	43400	39	48	132-160-180-200	—	—	104400	123500	40200	105000
	313 R3	**153**	6.5	39000	29	48	132-160-180-200	—	—	110300	130600	42800	105000
	313 R4	**185**	5.4	35700	23	26	71-80-90-100-112-132-160	—	—	116700	138100	45500	105000
	313 R4	**201**	5.0	38800	23	26	71-80-90-100-112-132-160	—	—	119700	141600	46800	105000
	313 R4	**237**	4.2	45600	23	26	71-80-90-100-112-132-160	—	—	125800	148900	49500	105000
	313 R4	**281**	3.6	49700	21	26	71-80-90-100-112-132-160	—	—	132400	156700	52400	105000
	313 R4	**309**	3.2	47600	18.2	26	71-80-90-100-112-132-160	—	—	136200	161200	54100	105000
	313 R4	**346**	2.9	54500	18.6	26	71-80-90-100-112-132-160	—	—	140900	166700	56100	105000
	313 R4	**387**	2.6	49500	15.1	26	71-80-90-100-112-132-160	—	—	145800	172500	58300	105000
	313 R4	**450**	2.2	50700	13.3	26	71-80-90-100-112-132-160	—	—	152500	180500	61300	105000
	313 R4	**496**	2.0	52200	12.5	26	71-80-90-100-112-132-160	—	—	157000	185800	63300	105000
	313 R4	**535**	1.9	52200	11.6	26	71-80-90-100-112-132-160	—	—	160600	190000	64900	105000
	313 R4	**647**	1.5	53900	9.9	26	71-80-90-100-112-132-160	—	—	170000	201200	69200	105000
	313 R4	**778**	1.3	47100	7.2	26	71-80-90-100-112-132-160	—	—	179700	212700	73600	105000
500	**313 R2 (B)**	**12.2**	41	17000	78	150	180-200-225-250	—	—	63600	75200	23200	86300
	313 R2 (B)	**15.9**	32	21900	77	150	180-200-225-250	—	—	68800	81400	25300	86300
	313 R2 (B)	**19.1**	26.2	26900	78	150	180-200-225-250	—	—	72700	86100	26900	86300
	313 R2 (C)	**16.8**	29.7	20200	67	180	180-200-225-250	—	—	70100	82900	25800	105000
	313 R2 (C)	**22.0**	22.8	26400	67	180	180-200-225-250	—	—	75900	89800	28200	105000
	313 R2 (C)	**26.4**	18.9	28300	60	180	180-200-225-250	—	—	80200	94900	30000	105000
	313 R3	**53.7**	9.3	28400	30	80	132-160-180-200	—	—	99200	117400	38000	105000
	313 R3	**64.0**	7.8	34100	31	80	132-160-180-200	—	—	104600	123800	40300	105000
	313 R3	**69.9**	7.1	37200	31	80	132-160-180-200	—	—	107400	127100	41500	105000
	313 R3	**82.2**	6.1	43700	31	80	132-160-180-200	—	—	112700	133400	43800	105000
	313 R3	**97.5**	5.1	50000	29	80	132-160-180-200	—	—	118700	140400	46400	105000
	313 R3	**107**	4.7	45100	24	80	132-160-180-200	—	—	122000	144400	47900	105000
	313 R3	**127**	3.9	46600	21	80	132-160-180-200	—	—	128500	152000	50700	105000
	313 R3	**153**	3.3	41100	15.4	80	132-160-180-200	—	—	135800	160700	53900	105000
	313 R4	**185**	2.7	43900	14.1	44	71-80-90-100-112-132-160	—	—	143700	170000	57400	105000
	313 R4	**201**	2.5	47700	14.1	44	71-80-90-100-112-132-160	—	—	147300	174400	59000	105000
	313 R4	**237**	2.1	53000	13.2	44	71-80-90-100-112-132-160	—	—	154900	183300	62400	105000
	313 R4	**281**	1.8	51300	10.8	44	71-80-90-100-112-132-160	—	—	163000	192900	66000	105000
	313 R4	**309**	1.6	53500	10.2	44	71-80-90-100-112-132-160	—	—	167700	198400	68100	105000
	313 R4	**346**	1.4	55200	9.5	44	71-80-90-100-112-132-160	—	—	173400	205200	70700	105000
	313 R4	**387**	1.3	55500	8.5	44	71-80-90-100-112-132-160	—	—	179500	212400	73500	105000

B

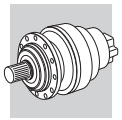

313 R — 362 — 57970 Nm

n_1 min^{-1}		i	n_2 min^{-1}	M_{n2} Nm	P_{n1} kW	Pt kW	P (IEC)	Rn_2 [N] MC	MZ	HC/PC	HZ/PZ	FZ	$M_{2\,max}$ Nm
500	**313 R4**	**450**	1.1	57000	7.5	44	71-80-90-100-112-132-160	—	—	187800	222200	77300	105000
	313 R4	**496**	1.0	53000	6.3	44	71-80-90-100-112-132-160	—	—	192000	228800	79800	105000
	313 R4	**535**	0.94	58000	6.4	44	71-80-90-100-112-132-160	—	—	192000	231000	80000	105000
	313 R4	**647**	0.77	58000	5.3	44	71-80-90-100-112-132-160	—	—	192000	231000	80000	105000
	313 R4	**778**	0.64	49000	3.7	44	71-80-90-100-112-132-160	—	—	192000	231000	80000	105000

314 R — 374 — 84000 Nm

n_1 min^{-1}		i	n_2 min^{-1}	M_{n2} Nm	P_{n1} kW	Pt kW	P (IEC)	Rn_2 [N] MC	MZ	HC/PC	HZ/PZ	FZ	$M_{2\,max}$ Nm
1500	**314 R3 (B)**	**51.1**	29.4	38500	130	55	180-200-225	—	—	75000	88100	29200	115000
	314 R3 (B)	**65.5**	22.9	49700	130	55	180-200-225	—	—	80900	94900	31700	115000
	314 R3 (B)	**77.8**	19.3	51500	114	55	180-200-225	—	—	85100	100000	33600	115000
	314 R3 (B)	**82.3**	18.2	52400	110	55	180-200-225	—	—	86600	101600	34200	115000
	314 R3 (B)	**97.6**	15.4	55100	97	55	180-200-225	—	—	91100	107000	36200	115000
	314 R3 (B)	**113**	13.2	48000	73	55	180-200-225	—	—	95300	111900	38100	115000
	314 R3 (C)	**70.7**	21.2	43900	107	55	180-200-225-250	—	—	82700	97100	32500	115000
	314 R3 (C)	**90.7**	16.5	47300	90	55	180-200-225-250	—	—	89200	104700	35300	115000
	314 R3 (C)	**108**	13.9	49800	80	55	180-200-225-250	—	—	93900	110200	37400	115000
	314 R3 (C)	**114**	13.2	51700	78	55	180-200-225-250	—	—	95400	112100	38100	115000
	314 R3 (C)	**135**	11.1	60500	77	55	180-200-225-250	—	—	100500	118000	40300	115000
	314 R3 (C)	**157**	9.5	52000	57	55	180-200-225-250	—	—	105100	123400	42400	115000
	314 R4	**160**	9.4	56200	35	22	71-80-90-100-112-132-160	—	—	105800	124200	42700	115000
	314 R4	**189**	7.9	59000	35	22	71-80-90-100-112-132-160	—	—	111200	130500	45100	115000
	314 R4	**238**	6.3	71100	35	22	71-80-90-100-112-132-160	—	—	119000	139700	48700	115000
	314 R4	**276**	5.4	75700	35	22	71-80-90-100-112-132-160	—	—	124500	146200	51200	115000
	314 R4	**354**	4.2	78200	35	22	71-80-90-100-112-132-160	—	—	134200	157500	55600	115000
	314 R4	**421**	3.6	78800	33	22	71-80-90-100-112-132-160	—	—	141300	165900	58900	115000
	314 R4	**445**	3.4	67800	27	22	71-80-90-100-112-132-160	—	—	143600	168700	60000	115000
	314 R4	**528**	2.8	68800	23	22	71-80-90-100-112-132-160	—	—	151200	177500	63500	115000
	314 R4	**614**	2.4	57600	16.7	22	71-80-90-100-112-132-160	—	—	158200	185800	66800	115000
1000	**314 R3 (B)**	**51.1**	19.6	43500	98	66	180-200-225	—	—	84700	99500	33400	115000
	314 R3 (B)	**65.5**	15.3	56500	99	66	180-200-225	—	—	91300	107200	36300	115000
	314 R3 (B)	**77.8**	12.9	58000	86	66	180-200-225	—	—	96100	112900	38400	115000
	314 R3 (B)	**82.3**	12.2	58900	82	66	180-200-225	—	—	97800	114800	39100	115000
	314 R3 (B)	**97.6**	10.2	62000	73	66	180-200-225	—	—	102900	120800	41400	115000
	314 R3 (B)	**113**	8.8	52000	53	66	180-200-225	—	—	107700	126400	43600	115000
	314 R3 (C)	**70.7**	14.1	49600	81	66	180-200-225-250	—	—	93400	109700	37200	115000
	314 R3 (C)	**90.7**	11.0	53500	68	66	180-200-225-250	—	—	100700	118200	40400	115000
	314 R3 (C)	**108**	9.3	56300	60	66	180-200-225-250	—	—	106000	124500	42800	115000
	314 R3 (C)	**114**	8.8	57700	58	66	180-200-225-250	—	—	107800	126600	43600	115000
	314 R3 (C)	**135**	7.4	63700	54	66	180-200-225-250	—	—	113500	133200	46200	115000
	314 R3 (C)	**157**	6.4	52000	38	66	180-200-225-250	—	—	118700	139400	48600	115000
	314 R4	**160**	6.2	63400	35	26	71-80-90-100-112-132-160	—	—	119500	140300	48900	115000
	314 R4	**189**	5.3	66700	35	26	71-80-90-100-112-132-160	—	—	125600	147400	51700	115000
	314 R4	**238**	4.2	77000	35	26	71-80-90-100-112-132-160	—	—	134400	157800	55700	115000
	314 R4	**276**	3.6	78700	34	26	71-80-90-100-112-132-160	—	—	140600	165100	58600	115000
	314 R4	**354**	2.8	79600	27	26	71-80-90-100-112-132-160	—	—	151500	177900	63700	115000
	314 R4	**421**	2.4	80200	23	26	71-80-90-100-112-132-160	—	—	159500	187300	67400	115000
	314 R4	**445**	2.2	70700	18.8	26	71-80-90-100-112-132-160	—	—	162200	190500	68700	115000
	314 R4	**528**	1.9	72400	16.2	26	71-80-90-100-112-132-160	—	—	170800	200500	72700	115000
	314 R4	**614**	1.6	61600	11.9	26	71-80-90-100-112-132-160	—	—	178700	209800	76500	115000
500	**314 R3 (B)**	**51.1**	9.8	53600	60	110	180-200-225	—	—	104300	122500	42100	115000
	314 R3 (B)	**65.5**	7.6	69400	61	110	180-200-225	—	—	112400	132000	45700	115000
	314 R3 (B)	**77.8**	6.4	71700	53	110	180-200-225	—	—	118400	139000	48400	115000
	314 R3 (B)	**82.3**	6.1	64600	45	110	180-200-225	—	—	120400	141300	49300	115000
	314 R3 (B)	**97.6**	5.1	65400	38	110	180-200-225	—	—	126700	148800	52200	115000
	314 R3 (B)	**113**	4.4	52900	27	110	180-200-225	—	—	132600	155600	54900	115000

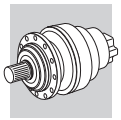

314 R — 374 — 84000 Nm

n_1 min^{-1}		i	n_2 min^{-1}	M_{n2} Nm	P_{n1} kW	Pt kW	P (IEC)	Rn_2 [N] MC	MZ	HC/PC	HZ/PZ	FZ	$M_{2\,max}$ Nm
500	**314 R3 (C)**	**70.7**	7.1	61100	50	110	180-200-225-250	—	—	115000	135100	46900	115000
	314 R3 (C)	**90.7**	5.5	65800	42	110	180-200-225-250	—	—	124000	145500	51000	115000
	314 R3 (C)	**108**	4.6	69000	37	110	180-200-225-250	—	—	130500	153200	53900	115000
	314 R3 (C)	**114**	4.4	66200	33	110	180-200-225-250	—	—	132700	155800	55000	115000
	314 R3 (C)	**135**	3.7	67200	29	110	180-200-225-250	—	—	139700	164000	58200	115000
	314 R3 (C)	**157**	3.2	55500	20	110	180-200-225-250	—	—	146200	171600	61200	115000
	314 R4	**160**	3.1	74700	28	44	71-80-90-100-112-132-160	—	—	147100	172700	61600	115000
	314 R4	**189**	2.6	78200	24	44	71-80-90-100-112-132-160	—	—	154600	181500	65100	115000
	314 R4	**238**	2.1	80700	20	44	71-80-90-100-112-132-160	—	—	165500	194300	70200	115000
	314 R4	**276**	1.8	81400	17.4	44	71-80-90-100-112-132-160	—	—	173100	203300	73800	115000
	314 R4	**354**	1.4	82500	13.8	44	71-80-90-100-112-132-160	—	—	186600	219100	80300	115000
	314 R4	**421**	1.2	83200	11.7	44	71-80-90-100-112-132-160	—	—	196400	230600	85000	115000
	314 R4	**445**	1.1	77900	10.4	44	71-80-90-100-112-132-160	—	—	199700	234500	86600	115000
	314 R4	**528**	0.95	79200	8.9	44	71-80-90-100-112-132-160	—	—	206000	243000	90000	115000
	314 R4	**614**	0.81	66800	6.4	44	71-80-90-100-112-132-160	—	—	206000	243000	90000	115000

315 R — 386 — 105000 Nm

n_1 min^{-1}		i	n_2 min^{-1}	M_{n2} Nm	P_{n1} kW	Pt kW	P (IEC)	Rn_2 [N] MC	MZ	HC/PC	HZ/PZ	FZ	$M_{2\,max}$ Nm
1500	**315 R3 (B)**	**51.1**	29.4	48100	150	75	180-200-225-250	—	—	75000	88100	29200	135000
	315 R3 (B)	**65.5**	22.9	62100	150	75	180-200-225-250	—	—	80900	94900	31700	135000
	315 R3 (B)	**77.8**	19.3	64400	143	75	180-200-225-250	—	—	85100	100000	33600	135000
	315 R3 (B)	**82.3**	18.2	65500	137	75	180-200-225-250	—	—	86600	101600	34200	135000
	315 R3 (B)	**97.6**	15.4	68800	121	75	180-200-225-250	—	—	91100	107000	36200	135000
	315 R3 (B)	**113**	13.2	60000	91	75	180-200-225-250	—	—	95300	111900	38100	135000
	315 R3 (C)	**70.7**	21.2	54900	134	90	180-200-225-250	—	—	82700	97100	32500	135000
	315 R3 (C)	**90.7**	16.5	59200	112	90	180-200-225-250	—	—	89200	104700	35300	135000
	315 R3 (C)	**108**	13.9	62300	100	90	180-200-225-250	—	—	93900	110200	37400	135000
	315 R3 (C)	**114**	13.2	64700	98	90	180-200-225-250	—	—	95400	112100	38100	135000
	315 R3 (C)	**135**	11.1	75700	96	90	180-200-225-250	—	—	100500	118000	40300	135000
	315 R3 (C)	**157**	9.5	65000	71	90	180-200-225-250	—	—	105100	123400	42400	135000
	315 R4	**225**	6.7	77700	61	40	132-160-180-200	—	—	117100	137500	47800	135000
	315 R4	**269**	5.6	82000	54	40	132-160-180-200	—	—	123500	145000	50700	135000
	315 R4	**345**	4.3	96000	49	40	132-160-180-200	—	—	133100	156200	55100	135000
	315 R4	**409**	3.7	98300	43	40	132-160-180-200	—	—	140100	164500	58400	135000
	315 R4	**525**	2.9	99400	34	40	132-160-180-200	—	—	151000	177300	63400	135000
	315 R4	**623**	2.4	100200	29	40	132-160-180-200	—	—	158900	186600	67200	135000
	315 R4	**659**	2.3	88200	24	40	132-160-180-200	—	—	161600	189800	68400	135000
	315 R4	**782**	1.9	90300	20	40	132-160-180-200	—	—	170200	199800	72400	135000
	315 R4	**909**	1.6	76900	15.0	40	132-160-180-200	—	—	178000	209000	76200	135000
1000	**315 R3 (B)**	**51.1**	19.6	54400	122	90	180-200-225-250	—	—	84700	99500	33400	135000
	315 R3 (B)	**65.5**	15.3	70700	124	90	180-200-225-250	—	—	91300	107200	36300	135000
	315 R3 (B)	**77.8**	12.9	72500	107	90	180-200-225-250	—	—	96100	112900	38400	135000
	315 R3 (B)	**82.3**	12.2	73700	103	90	180-200-225-250	—	—	97800	114800	39100	135000
	315 R3 (B)	**97.6**	10.2	77500	91	90	180-200-225-250	—	—	102900	120800	41400	135000
	315 R3 (B)	**113**	8.8	65000	66	90	180-200-225-250	—	—	107700	126400	43600	135000
	315 R3 (C)	**70.7**	14.1	62000	101	108	180-200-225-250	—	—	93400	109700	37200	135000
	315 R3 (C)	**90.7**	11.0	66800	85	108	180-200-225-250	—	—	100700	118200	40400	135000
	315 R3 (C)	**108**	9.3	70400	75	108	180-200-225-250	—	—	106000	124500	42800	135000
	315 R3 (C)	**114**	8.8	72100	73	108	180-200-225-250	—	—	107800	126600	43600	135000
	315 R3 (C)	**135**	7.4	79600	68	108	180-200-225-250	—	—	113500	133200	46200	135000
	315 R3 (C)	**157**	6.4	65000	47	108	180-200-225-250	—	—	118700	139400	48600	135000
	315 R4	**225**	4.4	86800	46	48	132-160-180-200	—	—	132300	155300	54800	135000
	315 R4	**269**	3.7	90500	40	48	132-160-180-200	—	—	139500	163700	58100	135000
	315 R4	**345**	2.9	98900	34	48	132-160-180-200	—	—	150300	176500	63100	135000
	315 R4	**409**	2.4	100100	29	48	132-160-180-200	—	—	158200	185800	66800	135000
	315 R4	**525**	1.9	101500	23	48	132-160-180-200	—	—	170500	200200	72600	135000

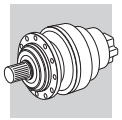

315 R

386

105000 Nm

n_1 min^{-1}		i	n_2 min^{-1}	M_{n2} Nm	P_{n1} kW	Pt kW	P (IEC)	Rn_2 [N] MC	MZ	HC/PC	HZ/PZ	FZ	$M_{2\,max}$ Nm
1000	**315 R4**	**623**	1.6	102400	19.4	48	132-160-180-200	—	—	179500	210800	76900	135000
	315 R4	**659**	1.5	93300	16.8	48	132-160-180-200	—	—	182500	214300	78300	135000
	315 R4	**782**	1.3	95600	14.5	48	132-160-180-200	—	—	192200	225600	82900	135000
	315 R4	**909**	1.1	82200	10.7	48	132-160-180-200	—	—	201000	236000	87200	135000
500	**315 R3 (B)**	**51.1**	9.8	67000	75	150	180-200-225-250	—	—	104300	122500	42100	135000
	315 R3 (B)	**65.5**	7.6	86800	76	150	180-200-225-250	—	—	112400	132000	45700	135000
	315 R3 (B)	**77.8**	6.4	89600	66	150	180-200-225-250	—	—	118400	139000	48400	135000
	315 R3 (B)	**82.3**	6.1	80700	56	150	180-200-225-250	—	—	120400	141300	49300	135000
	315 R3 (B)	**97.6**	5.1	81700	48	150	180-200-225-250	—	—	126700	148800	52200	135000
	315 R3 (B)	**113**	4.4	66200	33	150	180-200-225-250	—	—	132600	155600	54900	135000
	315 R3 (C)	**70.7**	7.1	76400	62	180	180-200-225-250	—	—	115000	135100	46900	135000
	315 R3 (C)	**90.7**	5.5	82300	52	180	180-200-225-250	—	—	124000	145500	51000	135000
	315 R3 (C)	**108**	4.6	86200	46	180	180-200-225-250	—	—	130500	153200	53900	135000
	315 R3 (C)	**114**	4.4	82800	42	180	180-200-225-250	—	—	132700	155800	55000	135000
	315 R3 (C)	**135**	3.7	84000	36	180	180-200-225-250	—	—	139700	164000	58200	135000
	315 R3 (C)	**157**	3.2	69300	25	180	180-200-225-250	—	—	146200	171600	61200	135000
	315 R4	**225**	2.2	98500	26	80	132-160-180-200	—	—	162800	191200	69000	135000
	315 R4	**269**	1.9	100900	22	80	132-160-180-200	—	—	171700	201600	73200	135000
	315 R4	**345**	1.4	102900	17.7	80	132-160-180-200	—	—	185000	217200	79500	135000
	315 R4	**409**	1.2	103900	15.0	80	132-160-180-200	—	—	194800	228700	84200	135000
	315 R4	**525**	0.95	105000	11.8	80	132-160-180-200	—	—	206000	243000	90000	135000
	315 R4	**623**	0.80	105000	10.0	80	132-160-180-200	—	—	206000	243000	90000	135000
	315 R4	**659**	0.76	99000	8.9	80	132-160-180-200	—	—	206000	243000	90000	135000
	315 R4	**782**	0.64	99000	7.5	80	132-160-180-200	—	—	206000	243000	90000	135000
	315 R4	**909**	0.55	83500	5.4	80	132-160-180-200	—	—	206000	243000	90000	135000

316 R

398

138820 Nm

n_1 min^{-1}		i	n_2 min^{-1}	M_{n2} Nm	P_{n1} kW	Pt kW	P (IEC)	Rn_2 [N] MC	MZ	HC/PC	HZ/PZ	FZ	$M_{2\,max}$ Nm
1500	**316 R3 (B)**	**51.1**	29.4	50000	150	75	180-200-225-250	—	—	124800	138800	48600	192000
	316 R3 (B)	**65.5**	22.9	63800	150	75	180-200-225-250	—	—	134500	149500	52800	192000
	316 R3 (B)	**77.8**	19.3	65800	146	75	180-200-225-250	—	—	141600	157400	55900	192000
	316 R3 (C)	**70.7**	21.2	59300	144	90	180-200-225-250	—	—	137600	153000	54200	192000
	316 R3 (C)	**90.7**	16.5	69800	132	90	180-200-225-250	—	—	148200	164900	58900	192000
	316 R3 (C)	**108**	13.9	72500	116	90	180-200-225-250	—	—	156100	173600	62300	192000
	316 R4	**225**	6.7	94500	74	45	132-160-180-200	—	—	194700	216600	79700	192000
	316 R4	**269**	5.6	99700	66	45	132-160-180-200	—	—	205300	228300	84600	192000
	316 R4	**289**	5.2	105700	65	45	132-160-180-200	—	—	209900	233400	86600	192000
	316 R4	**345**	4.3	107300	55	45	132-160-180-200	—	—	221300	246100	91900	192000
	316 R4	**409**	3.7	112700	49	45	132-160-180-200	—	—	232900	259100	97300	192000
	316 R4	**443**	3.4	117300	47	45	132-160-180-200	—	—	238500	265200	99900	192000
	316 R4	**525**	2.9	118900	40	45	132-160-180-200	—	—	251000	279200	105700	192000
	316 R4	**623**	2.4	115400	33	45	132-160-180-200	—	—	264300	293900	111900	192000
1000	**316 R3 (B)**	**51.1**	19.6	56900	128	90	180-200-225-250	—	—	140900	156700	55700	192000
	316 R3 (B)	**65.5**	15.3	72400	127	90	180-200-225-250	—	—	151900	168900	60500	192000
	316 R3 (B)	**77.8**	12.9	74300	110	90	180-200-225-250	—	—	159900	177800	64000	192000
	316 R3 (C)	**70.7**	14.1	66900	109	108	180-200-225-250	—	—	155300	172800	62000	192000
	316 R3 (C)	**90.7**	11.0	78800	100	108	180-200-225-250	—	—	167400	186200	67400	192000
	316 R3 (C)	**108**	9.3	81900	87	108	180-200-225-250	—	—	176200	196000	71400	192000
	316 R4	**225**	4.4	106600	56	54	132-160-180-200	—	—	219900	244600	91300	192000
	316 R4	**269**	3.7	112200	49	54	132-160-180-200	—	—	231900	257900	96800	192000
	316 R4	**289**	3.5	116700	48	54	132-160-180-200	—	—	237000	263600	99200	192000
	316 R4	**345**	2.9	120700	41	54	132-160-180-200	—	—	249900	277900	105200	192000
	316 R4	**409**	2.4	126200	36	54	132-160-180-200	—	—	263100	292600	111400	192000
	316 R4	**443**	2.3	127400	34	54	132-160-180-200	—	—	269300	299500	114300	192000
	316 R4	**525**	1.9	127500	29	54	132-160-180-200	—	—	283500	315300	121000	192000
	316 R4	**623**	1.6	119300	23	54	132-160-180-200	—	—	298500	331900	128100	192000

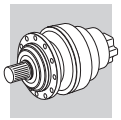

316 R — 398 — 138820 Nm

n_1 min^{-1}		i	n_2 min^{-1}	M_{n2} Nm	P_{n1} kW	Pt kW	P (IEC)	Rn_2 [N] MC	MZ	HC/PC	HZ/PZ	FZ	$M_{2\,max}$ Nm
500	**316 R3 (B)**	**51.1**	9.8	70800	79	150	180-200-225-250	—	—	173500	192900	70100	192000
	316 R3 (B)	**65.5**	7.6	90400	79	150	180-200-225-250	—	—	187000	207900	76200	192000
	316 R3 (B)	**77.8**	6.4	91500	67	150	180-200-225-250	—	—	196800	218900	80700	192000
	316 R3 (C)	**70.7**	7.1	82400	67	180	180-200-225-250	—	—	191300	212700	78100	192000
	316 R3 (C)	**90.7**	5.5	97000	61	180	180-200-225-250	—	—	206100	229200	84900	192000
	316 R3 (C)	**108**	4.6	99600	53	180	180-200-225-250	—	—	217000	241300	89900	192000
	316 R4	**225**	2.2	127600	34	90	132-160-180-200	—	—	270700	301100	115000	192000
	316 R4	**269**	1.9	130000	29	90	132-160-180-200	—	—	285500	317500	122000	192000
	316 R4	**289**	1.7	131000	27	90	132-160-180-200	—	—	291800	324500	124900	192000
	316 R4	**345**	1.4	133500	23	90	132-160-180-200	—	—	307700	342200	132500	192000
	316 R4	**409**	1.2	135900	19.6	90	132-160-180-200	—	—	323900	360200	140300	192000
	316 R4	**443**	1.1	137000	18.3	90	132-160-180-200	—	—	331600	368700	144000	192000
	316 R4	**525**	0.95	138800	15.6	90	132-160-180-200	—	—	345000	385000	150000	192000
	316 R4	**623**	0.80	124000	11.8	90	132-160-180-200	—	—	345000	385000	150000	192000

317 R — 408 — 187860 Nm

n_1 min^{-1}		i	n_2 min^{-1}	M_{n2} Nm	P_{n1} kW	Pt kW	P (IEC)	Rn_2 [N] MC	MZ	HC/PC	HZ/PZ	FZ	$M_{2\,max}$ Nm
1500	**317 R3 (B)**	**49.8**	30	46900	150	90	180-200-225-250	—	—	159200	169500	48200	393000
	317 R3 (B)	**64.9**	23.1	61200	150	90	180-200-225-250	—	—	172400	183500	52700	393000
	317 R3 (B)	**78.1**	19.2	75100	150	90	180-200-225-250	—	—	182200	194000	56000	393000
	317 R3 (B)	**83.3**	18.0	80200	150	90	180-200-225-250	—	—	185800	197800	57200	393000
	317 R3 (B)	**100**	15.0	96200	150	90	180-200-225-250	—	—	196400	209100	60900	393000
	317 R3 (B)	**119**	12.6	111000	150	90	180-200-225-250	—	—	206700	220100	64400	393000
	317 R3 (C)	**68.9**	21.8	57800	144	100	180-200-225-250	—	—	175500	186900	53700	393000
	317 R3 (C)	**89.8**	16.7	75300	144	100	180-200-225-250	—	—	190000	202300	58700	393000
	317 R3 (C)	**108**	13.9	90600	144	100	180-200-225-250	—	—	200900	213900	62400	393000
	317 R3 (C)	**115**	13.0	96600	144	100	180-200-225-250	—	—	204800	218100	63800	393000
	317 R3 (C)	**139**	10.8	116300	144	100	180-200-225-250	—	—	216500	230500	67800	393000
	317 R3 (C)	**165**	9.1	118900	124	100	180-200-225-250	—	—	227900	242700	71800	393000
	317 R4	**220**	6.8	81400	66	50	132-160-180-200	—	—	248500	264500	79000	393000
	317 R4	**262**	5.7	97200	66	50	132-160-180-200	—	—	262000	278900	83800	393000
	317 R4	**336**	4.5	124700	66	50	132-160-180-200	—	—	282300	300600	91100	393000
	317 R4	**399**	3.8	148000	66	50	132-160-180-200	—	—	297200	316500	96500	393000
	317 R4	**438**	3.4	157000	64	50	132-160-180-200	—	—	305700	325500	99500	393000
	317 R4	**520**	2.9	164800	56	50	132-160-180-200	—	—	321800	342600	105400	393000
	317 R4	**626**	2.4	155000	44	50	132-160-180-200	—	—	340200	362200	112100	393000
	317 R4	**677**	2.2	164700	43	50	132-160-180-200	—	—	348300	370800	115000	393000
	317 R4	**803**	1.9	165900	37	50	132-160-180-200	—	—	366700	390400	121800	393000
	317 R4	**953**	1.6	145000	27	50	132-160-180-200	—	—	386000	411000	129000	393000
1000	**317 R3 (B)**	**49.8**	20.1	53000	122	108	180-200-225-250	—	—	179800	191400	55200	393000
	317 R3 (B)	**64.9**	15.4	69100	122	108	180-200-225-250	—	—	194700	207300	60300	393000
	317 R3 (B)	**78.1**	12.8	85500	126	108	180-200-225-250	—	—	205800	219100	64100	393000
	317 R3 (B)	**83.3**	12.0	90800	125	108	180-200-225-250	—	—	209800	223400	65500	393000
	317 R3 (B)	**100**	10.0	109300	125	108	180-200-225-250	—	—	221800	236100	69700	393000
	317 R3 (B)	**119**	8.4	119100	115	108	180-200-225-250	—	—	233500	248600	73800	393000
	317 R3 (C)	**68.9**	14.5	65200	109	120	180-200-225-250	—	—	198200	211000	61500	393000
	317 R3 (C)	**89.8**	11.1	85000	109	120	180-200-225-250	—	—	214600	228500	67200	393000
	317 R3 (C)	**108**	9.2	102400	109	120	180-200-225-250	—	—	226900	241600	71500	393000
	317 R3 (C)	**115**	8.7	109100	109	120	180-200-225-250	—	—	231300	246300	73000	393000
	317 R3 (C)	**139**	7.2	131400	109	120	180-200-225-250	—	—	244500	260300	77700	393000
	317 R3 (C)	**165**	6.1	119600	83	120	180-200-225-250	—	—	257400	274100	82200	393000
	317 R4	**220**	4.6	92000	50	60	132-160-180-200	—	—	280600	298700	90500	393000
	317 R4	**262**	3.8	109700	50	60	132-160-180-200	—	—	295900	315000	96000	393000
	317 R4	**336**	3.0	140800	50	60	132-160-180-200	—	—	318900	339500	104300	393000
	317 R4	**399**	2.5	167100	50	60	132-160-180-200	—	—	335700	357400	110400	393000
	317 R4	**438**	2.3	172800	47	60	132-160-180-200	—	—	345200	367600	113900	393000

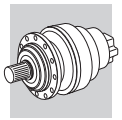

317 R

408

187860 Nm

n_1 min^{-1}		i	n_2 min^{-1}	M_{n2} Nm	P_{n1} kW	Pt kW	P (IEC)	Rn_2 [N] MC	MZ	HC/PC	HZ/PZ	FZ	$M_{2\,max}$ Nm
1000	**317 R4**	**520**	1.9	175200	40	60	132-160-180-200	—	—	363400	387000	120600	393000
	317 R4	**626**	1.6	155000	29	60	132-160-180-200	—	—	384200	409100	128300	393000
	317 R4	**677**	1.5	167400	29	60	132-160-180-200	—	—	393300	418800	131700	393000
	317 R4	**803**	1.2	168500	25	60	132-160-180-200	—	—	414100	440900	139400	393000
	317 R4	**953**	1.0	154900	19.2	60	132-160-180-200	—	—	435900	464100	147600	393000
500	**317 R3 (B)**	**49.8**	10.0	65200	75	180	180-200-225-250	—	—	221300	235700	69500	393000
	317 R3 (B)	**64.9**	7.7	85000	75	180	180-200-225-250	—	—	239700	255200	75900	393000
	317 R3 (B)	**78.1**	6.4	106500	78	180	180-200-225-250	—	—	253400	269800	80800	393000
	317 R3 (B)	**83.3**	6.0	113100	78	180	180-200-225-250	—	—	258300	275000	82500	393000
	317 R3 (B)	**100**	5.0	134900	77	180	180-200-225-250	—	—	273100	290700	87800	393000
	317 R3 (B)	**119**	4.2	123400	60	180	180-200-225-250	—	—	287500	306100	92900	393000
	317 R3 (C)	**68.9**	7.3	80300	67	200	180-200-225-250	—	—	244000	259800	77500	393000
	317 R3 (C)	**89.8**	5.6	104700	67	200	180-200-225-250	—	—	264200	281300	84600	393000
	317 R3 (C)	**108**	4.6	123600	66	200	180-200-225-250	—	—	279300	297400	90000	393000
	317 R3 (C)	**115**	4.3	134400	67	200	180-200-225-250	—	—	284800	303200	92000	393000
	317 R3 (C)	**139**	3.6	154600	64	200	180-200-225-250	—	—	301000	320500	97800	393000
	317 R3 (C)	**165**	3.0	130200	45	200	180-200-225-250	—	—	316900	337400	103600	393000
	317 R4	**220**	2.3	112500	30	100	132-160-180-200	—	—	345400	367800	114000	393000
	317 R4	**262**	1.9	134900	30	100	132-160-180-200	—	—	364200	387800	120900	393000
	317 R4	**336**	1.5	173400	31	100	132-160-180-200	—	—	392600	418000	131400	393000
	317 R4	**399**	1.3	196500	29	100	132-160-180-200	—	—	413200	440000	139100	393000
	317 R4	**438**	1.1	182400	25	100	132-160-180-200	—	—	425000	452500	143500	393000
	317 R4	**520**	0.96	184300	21	100	132-160-180-200	—	—	442000	470000	150000	393000
	317 R4	**626**	0.80	155000	14.6	100	132-160-180-200	—	—	442000	470000	150000	393000
	317 R4	**677**	0.74	170000	14.9	100	132-160-180-200	—	—	442000	470000	150000	393000
	317 R4	**803**	0.62	170000	12.5	100	132-160-180-200	—	—	442000	470000	150000	393000
	317 R4	**953**	0.52	156200	9.7	100	132-160-180-200	—	—	442000	470000	150000	393000

318 R

418

280580 Nm

n_1 min^{-1}		i	n_2 min^{-1}	M_{n2} Nm	P_{n1} kW	Pt kW	P (IEC)	Rn_2 [N] MC	MZ	HC/PC	HZ/PZ	FZ	$M_{2\,max}$ Nm
1500	**318 R4 (B)**	**225**	6.7	200200	150	90	180-200-225-250	—	—	313900	320300	106200	500000
	318 R4 (B)	**288**	5.2	215700	133	90	180-200-225-250	—	—	338300	345200	115400	500000
	318 R4 (B)	**342**	4.4	226200	117	90	180-200-225-250	—	—	356100	363400	122200	500000
	318 R4 (B)	**362**	4.1	229600	113	90	180-200-225-250	—	—	362100	369600	124500	500000
	318 R4 (B)	**430**	3.5	240400	99	90	180-200-225-250	—	—	381200	389100	131800	500000
	318 R4 (B)	**499**	3.0	250300	89	90	180-200-225-250	—	—	398900	407000	138600	500000
	318 R4 (C)	**311**	4.8	220500	126	110	180-200-225-250	—	—	346100	353200	118400	500000
	318 R4 (C)	**399**	3.8	235700	105	110	180-200-225-250	—	—	373000	380600	128700	500000
	318 R4 (C)	**474**	3.2	246800	92	110	180-200-225-250	—	—	392600	400700	136200	500000
	318 R4 (C)	**501**	3.0	250600	89	110	180-200-225-250	—	—	399300	407500	138800	500000
	318 R4 (C)	**595**	2.5	262400	78	110	180-200-225-250	—	—	420300	428900	146900	500000
	318 R4 (C)	**691**	2.2	265600	68	110	180-200-225-250	—	—	439700	448800	154500	500000
1000	**318 R4 (B)**	**225**	4.5	225300	119	108	180-200-225-250	—	—	354500	361800	121600	500000
	318 R4 (B)	**288**	3.5	240900	99	108	180-200-225-250	—	—	382100	389900	132100	500000
	318 R4 (B)	**342**	2.9	252200	87	108	180-200-225-250	—	—	402200	410500	139900	500000
	318 R4 (B)	**362**	2.8	256000	84	108	180-200-225-250	—	—	409000	417400	142500	500000
	318 R4 (B)	**430**	2.3	264300	73	108	180-200-225-250	—	—	430600	439400	150900	500000
	318 R4 (B)	**499**	2.0	267100	63	108	180-200-225-250	—	—	450400	459700	158700	500000
	318 R4 (C)	**311**	3.2	245800	93	132	180-200-225-250	—	—	390800	398900	135500	500000
	318 R4 (C)	**399**	2.5	262900	78	132	180-200-225-250	—	—	421200	429900	147300	500000
	318 R4 (C)	**474**	2.1	266200	66	132	180-200-225-250	—	—	443400	452500	155900	500000
	318 R4 (C)	**501**	2.0	267200	63	132	180-200-225-250	—	—	450900	460200	158800	500000
	318 R4 (C)	**595**	1.7	270500	54	132	180-200-225-250	—	—	474700	484400	168200	500000
	318 R4 (C)	**691**	1.4	273400	47	132	180-200-225-250	—	—	496600	506800	176800	500000
500	**318 R4 (B)**	**225**	2.2	265200	70	180	180-200-225-250	—	—	436500	445400	153200	500000
	318 R4 (B)	**288**	1.7	269900	55	180	180-200-225-250	—	—	470400	480000	166500	500000

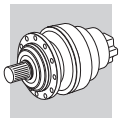

318 R

418

280580 Nm

n_1 min^{-1}		i	n_2 min^{-1}	M_{n2} Nm	P_{n1} kW	Pt kW	P (IEC)	Rn_2 [N] MC	MZ	HC/PC	HZ/PZ	FZ	$M_{2\,max}$ Nm
500	**318 R4 (B)**	**342**	1.5	273200	47	180	180-200-225-250	—	—	495200	505300	176300	500000
	318 R4 (B)	**362**	1.4	274200	45	180	180-200-225-250	—	—	503000	513900	179600	500000
	318 R4 (B)	**430**	1.2	277600	38	180	180-200-225-250	—	—	503000	541000	190100	500000
	318 R4 (B)	**499**	1.0	280600	33	180	180-200-225-250	—	—	503000	565000	199900	500000
	318 R4 (C)	**311**	1.6	271300	52	220	180-200-225-250	—	—	481200	491100	170700	500000
	318 R4 (C)	**399**	1.3	276200	41	220	180-200-225-250	—	—	503000	529200	185500	500000
	318 R4 (C)	**474**	1.1	279500	35	220	180-200-225-250	—	—	503000	557100	196400	500000
	318 R4 (C)	**501**	1.00	280600	33	220	180-200-225-250	—	—	503000	565000	200000	500000
	318 R4 (C)	**595**	0.84	280600	28	220	180-200-225-250	—	—	503000	565000	200000	500000
	318 R4 (C)	**691**	0.72	280600	24	220	180-200-225-250	—	—	503000	565000	200000	500000

319 R

428

403720 Nm

n_1 min^{-1}		i	n_2 min^{-1}	M_{n2} Nm	P_{n1} kW	Pt kW	P (IEC)	Rn_2 [N] MC	MZ	HC/PC	HZ/PZ	FZ	$M_{2\,max}$ Nm
1500	**319 R4 (B)**	**249**	6.0	227700	150	95	180-200-225-250	—	—	372100	409900	109900	680000
	319 R4 (B)	**320**	4.7	289000	150	95	180-200-225-250	—	—	401000	441800	119400	680000
	319 R4 (B)	**379**	4.0	304200	142	95	180-200-225-250	—	—	422100	465100	126500	680000
	319 R4 (B)	**401**	3.7	310500	137	95	180-200-225-250	—	—	429200	472900	128800	680000
	319 R4 (B)	**475**	3.2	300900	112	95	180-200-225-250	—	—	451500	497400	136300	680000
	319 R4 (B)	**563**	2.7	313000	99	95	180-200-225-250	—	—	475300	523700	144300	680000
	319 R4 (B)	**655**	2.3	321300	87	95	180-200-225-250	—	—	497300	547900	151700	680000
	319 R4 (C)	**345**	4.4	259700	134	115	180-200-225-250	—	—	410200	451900	122500	680000
	319 R4 (C)	**442**	3.4	279900	112	115	180-200-225-250	—	—	442100	487100	133100	680000
	319 R4 (C)	**525**	2.9	294600	100	115	180-200-225-250	—	—	465400	512700	140900	680000
	319 R4 (C)	**555**	2.7	306300	98	115	180-200-225-250	—	—	473200	521400	143600	680000
	319 R4 (C)	**657**	2.3	322200	87	115	180-200-225-250	—	—	497800	548400	151900	680000
	319 R4 (C)	**780**	1.9	331100	75	115	180-200-225-250	—	—	524000	577300	160800	680000
	319 R4 (C)	**906**	1.7	335900	66	115	180-200-225-250	—	—	548200	604000	169100	680000
1000	**319 R4 (B)**	**249**	4.0	257100	122	114	180-200-225-250	—	—	420200	462900	125800	680000
	319 R4 (B)	**320**	3.1	323900	120	114	180-200-225-250	—	—	452800	498900	136700	680000
	319 R4 (B)	**379**	2.6	342600	107	114	180-200-225-250	—	—	476700	525200	144800	680000
	319 R4 (B)	**401**	2.5	348100	103	114	180-200-225-250	—	—	484800	534100	147500	680000
	319 R4 (B)	**475**	2.1	326400	81	114	180-200-225-250	—	—	509900	561800	156000	680000
	319 R4 (B)	**563**	1.8	335400	70	114	180-200-225-250	—	—	536800	591400	165200	680000
	319 R4 (B)	**655**	1.5	339600	61	114	180-200-225-250	—	—	561600	618700	173700	680000
	319 R4 (C)	**345**	2.9	293300	101	138	180-200-225-250	—	—	463300	510400	140200	680000
	319 R4 (C)	**442**	2.3	316100	85	138	180-200-225-250	—	—	499300	550100	152400	680000
	319 R4 (C)	**525**	1.9	332800	75	138	180-200-225-250	—	—	525600	579100	161300	680000
	319 R4 (C)	**555**	1.8	338600	72	138	180-200-225-250	—	—	534500	588800	164400	680000
	319 R4 (C)	**657**	1.5	343700	62	138	180-200-225-250	—	—	562200	619400	173900	680000
	319 R4 (C)	**780**	1.3	353300	54	138	180-200-225-250	—	—	591800	652000	184100	680000
	319 R4 (C)	**906**	1.1	354900	46	138	180-200-225-250	—	—	619100	682100	193600	680000
500	**319 R4 (B)**	**249**	2.0	316600	75	190	180-200-225-250	—	—	517300	570000	158500	680000
	319 R4 (B)	**320**	1.6	373900	69	190	180-200-225-250	—	—	557500	614200	172300	680000
	319 R4 (B)	**379**	1.3	386000	60	190	180-200-225-250	—	—	586900	646600	182400	680000
	319 R4 (B)	**401**	1.2	379400	56	190	180-200-225-250	—	—	596800	657500	185800	680000
	319 R4 (B)	**475**	1.1	364500	45	190	180-200-225-250	—	—	627700	691600	196500	680000
	319 R4 (B)	**563**	0.89	367600	39	190	180-200-225-250	—	—	638000	702000	200000	680000
	319 R4 (B)	**655**	0.76	359700	32	190	180-200-225-250	—	—	638000	702000	200000	680000
	319 R4 (C)	**345**	1.5	361100	62	230	180-200-225-250	—	—	570300	628400	176700	680000
	319 R4 (C)	**442**	1.1	389200	52	230	180-200-225-250	—	—	614700	677200	192000	680000
	319 R4 (C)	**525**	0.95	403700	45	230	180-200-225-250	—	—	638000	702000	200000	680000
	319 R4 (C)	**555**	0.90	389900	42	230	180-200-225-250	—	—	638000	702000	200000	680000
	319 R4 (C)	**657**	0.76	367600	33	230	180-200-225-250	—	—	638000	702000	200000	680000
	319 R4 (C)	**780**	0.64	367600	28	230	180-200-225-250	—	—	638000	702000	200000	680000
	319 R4 (C)	**906**	0.55	359700	23	230	180-200-225-250	—	—	638000	702000	200000	680000

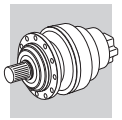

321 R

438

655200 Nm

n_1 min^{-1}		i	n_2 min^{-1}	M_{n2} Nm	P_{n1} kW	Pt kW	P (IEC)	Rn_2 [N] MC	MZ	HC/PC	HZ/PZ	FZ	$M_{2\,max}$ Nm
1500	**321 R4 (B)**	**221**	6.8	205600	150	105	180-200-225-250	—	—	440600	522400	634000	934000
	321 R4 (B)	**288**	5.2	265300	150	105	180-200-225-250	—	—	477000	565700	692600	934000
	321 R4 (B)	**347**	4.3	320600	150	105	180-200-225-250	—	—	504300	598000	736800	934000
	321 R4 (B)	**370**	4.1	341300	150	105	180-200-225-250	—	—	514100	609600	752700	934000
	321 R4 (B)	**446**	3.4	409600	150	105	180-200-225-250	—	—	543500	644500	800600	934000
	321 R4 (B)	**529**	2.8	484700	150	105	180-200-225-250	—	—	572100	678500	847700	934000
	321 R4 (C)	**306**	4.9	249000	144	125	180-200-225-250	—	—	485700	576000	706700	934000
	321 R4 (C)	**399**	3.8	324600	144	125	180-200-225-250	—	—	525900	623700	771900	934000
	321 R4 (C)	**481**	3.1	390700	144	125	180-200-225-250	—	—	556000	659300	821100	934000
	321 R4 (C)	**512**	2.9	416600	144	125	180-200-225-250	—	—	566800	672100	838900	934000
	321 R4 (C)	**617**	2.4	501400	144	125	180-200-225-250	—	—	599200	710600	892300	934000
	321 R4 (C)	**732**	2.0	521400	126	125	180-200-225-250	—	—	630800	748000	944800	934000
1000	**321 R4 (B)**	**221**	4.5	233700	125	126	180-200-225-250	—	—	497500	590000	725800	934000
	321 R4 (B)	**288**	3.5	304200	125	126	180-200-225-250	—	—	538700	638800	792800	934000
	321 R4 (B)	**347**	2.9	361600	123	126	180-200-225-250	—	—	569500	675400	843400	934000
	321 R4 (B)	**370**	2.7	391600	125	126	180-200-225-250	—	—	580600	688500	861600	934000
	321 R4 (B)	**446**	2.2	460100	122	126	180-200-225-250	—	—	613800	727900	916500	934000
	321 R4 (B)	**529**	1.9	513000	115	126	180-200-225-250	—	—	646100	766200	970400	934000
	321 R4 (C)	**306**	3.3	281200	109	150	180-200-225-250	—	—	548500	650500	808900	934000
	321 R4 (C)	**399**	2.5	366600	109	150	180-200-225-250	—	—	593900	704300	883600	934000
	321 R4 (C)	**481**	2.1	441300	109	150	180-200-225-250	—	—	627900	744600	940000	934000
	321 R4 (C)	**512**	2.0	470500	109	150	180-200-225-250	—	—	640100	759100	960200	934000
	321 R4 (C)	**617**	1.6	566500	109	150	180-200-225-250	—	—	676700	802500	1021500	934000
	321 R4 (C)	**732**	1.4	529800	86	150	180-200-225-250	—	—	712400	844800	1081500	934000
500	**321 R4 (B)**	**221**	2.3	290300	78	210	180-200-225-250	—	—	612500	726400	914500	934000
	321 R4 (B)	**288**	1.7	379500	78	210	180-200-225-250	—	—	663200	786500	998900	934000
	321 R4 (B)	**347**	1.4	450300	77	210	180-200-225-250	—	—	701200	831500	1062600	934000
	321 R4 (B)	**370**	1.4	483100	77	210	180-200-225-250	—	—	714800	847600	1085500	934000
	321 R4 (B)	**446**	1.1	567200	75	210	180-200-225-250	—	—	755600	896100	1154700	934000
	321 R4 (B)	**529**	0.95	536400	60	210	180-200-225-250	—	—	779000	923000	1200000	934000
	321 R4 (C)	**306**	1.6	346300	67	250	180-200-225-250	—	—	675300	800800	1019200	934000
	321 R4 (C)	**399**	1.3	451600	67	250	180-200-225-250	—	—	731200	867100	1113300	934000
	321 R4 (C)	**481**	1.0	543700	67	250	180-200-225-250	—	—	773000	916700	1184300	934000
	321 R4 (C)	**512**	0.98	575400	66	250	180-200-225-250	—	—	779000	923000	1200000	934000
	321 R4 (C)	**617**	0.81	655200	63	250	180-200-225-250	—	—	779000	923000	1200000	934000
	321 R4 (C)	**732**	0.68	536400	43	250	180-200-225-250	—	—	779000	923000	1200000	934000

B

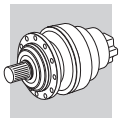

25.5 3/V - PLANETARYWORM RATING CHARTS

Reading the rating chart.

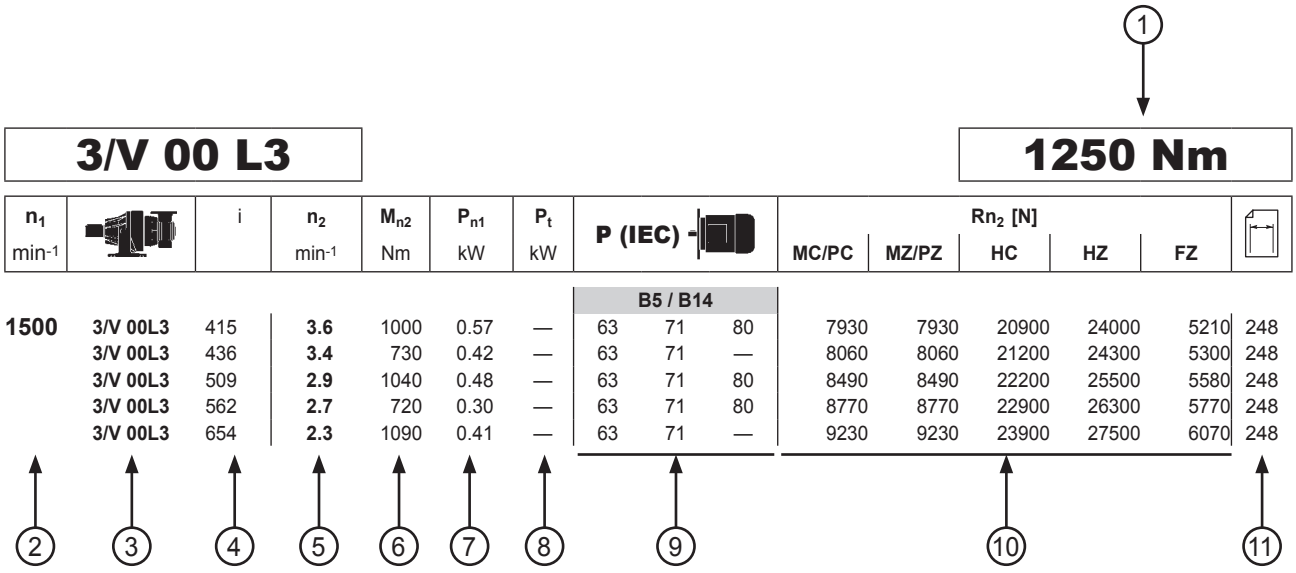

1	Reference torque
2	Gearbox drive speed
3	Frame size of combined worm + planetary gearbox
4	Gear ratio
5	Gearbox output speed
6	Gearbox rated output torque based on: - service factor f_S=1 - 10000 h theoretical lifetime
7	Gearbox rated input power, based on: - service factor f_S=1 - 10000 h theoretical lifetime
8	Gearbox thermal capacity
9	Frame size of compatible IEC electric motor - IEC inputs marked with * feature a lowered key.
10	Permitted overhung loading on output shaft, based on: - service factor f_S=1 - 10000 h theoretical lifetime - speed of output n_2 For forces not applied at shaft middlepoint, see diagrams provided in the specific gearbox overall dimensioning pages
11	Dimensions page

B

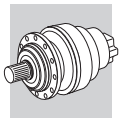

3/V 00 L3 — 1250 Nm

n_1 min^{-1}		i	n_2 min^{-1}	M_{n2} Nm	P_{n1} kW	Pt kW	P (IEC)			Rn_2 [N] MC/PC	MZ/PZ	HC	HZ	FZ	
							B5 / B14								
1500	3/V 00L3	415	3.6	1000	0.57	—	63	71	80	7930	7930	20900	24000	5210	248
	3/V 00L3	436	3.4	730	0.42	—	63	71	—	8060	8060	21200	24300	5300	248
	3/V 00L3	509	2.9	1040	0.48	—	63	71	80	8490	8490	22200	25500	5580	248
	3/V 00L3	562	2.7	720	0.30	—	63	71	80	8770	8770	22900	26300	5770	248
	3/V 00L3	654	2.3	1090	0.41	—	63	71	—	9230	9230	23900	27500	6070	248
	3/V 00L3	689	2.2	1100	0.37	—	63	71	80	9390	9390	24300	27900	6170	248
	3/V 00L3	818	1.8	1110	0.36	—	63	71	—	9940	9940	25600	29400	6540	248
	3/V 00L3	903	1.7	790	0.23	—	63	71	—	10300	10300	26400	30300	6760	248
	3/V 00L3	997	1.5	800	0.18	—	63	71	80	10600	10600	27100	31200	6980	248
	3/V 00L3	1107	1.4	1190	0.28	—	63	71	—	11000	11000	28000	32200	7230	248
	3/V 00L3	1198	1.3	830	0.17	—	63	71	—	11300	11300	28700	33000	7420	248
	3/V 00L3	1381	1.1	1230	0.24	—	63	71	—	11800	11800	29900	34000	7780	248
	3/V 00L3	1495	1.0	860	0.14	—	63	71	—	12000	12200	30700	34000	7990	248
	3/V 00L3	1869	0.80	860	0.12	—	63	71	—	12000	12500	31000	34000	8000	248
	3/V 00L3	2337	0.64	860	0.10	—	63	71	—	12000	12500	31000	34000	8000	248

3/V 01 L3 — 2460 Nm

n_1 min^{-1}		i	n_2 min^{-1}	M_{n2} Nm	P_{n1} kW	Pt kW	P (IEC)			Rn_2 [N] MC/PC	MZ/PZ	HC	HZ	FZ	
							B5 / B14								
1500	3/V 01L3	430	3.5	1880	0.90	—	63	71	80	8020	8020	21100	24200	5270	258
	3/V 01L3	443	3.4	1370	0.66	—	63	71	80	8100	8100	21300	24400	5330	258
	3/V 01L3	509	2.9	1270	0.58	—	63	71	80	8490	8490	22200	25500	5580	258
	3/V 01L3	562	2.7	1400	0.58	—	63	71	80	8770	8770	22900	26300	5770	258
	3/V 01L3	654	2.3	1180	0.45	—	63	71	—	9230	9230	23900	27500	6070	258
	3/V 01L3	689	2.2	1710	0.58	—	63	71	80	9390	9390	24300	27900	6170	258
	3/V 01L3	799	1.9	1540	0.43	—	63	71	80	9860	9860	25400	29200	6480	258
	3/V 01L3	903	1.7	1230	0.36	—	63	71	—	10300	10300	26400	30300	6760	258
	3/V 01L3	997	1.5	1600	0.36	—	63	71	80	10600	10600	27100	31200	6980	258
	3/V 01L3	1105	1.4	1990	0.45	—	63	71	—	11000	11000	28000	32200	7230	258
	3/V 01L3	1198	1.3	1650	0.34	—	63	71	—	11300	11300	28700	33000	7420	258
	3/V 01L3	1381	1.1	1880	0.36	—	63	71	—	11800	11800	29900	34000	7780	258
	3/V 01L3	1495	1.0	1720	0.29	—	63	71	—	12000	12200	30700	34000	7990	258
	3/V 01L3	1869	0.80	1720	0.24	—	63	71	—	12000	12500	31000	34000	8000	258
	3/V 01L3	2337	0.64	1720	0.20	—	63	71	—	12000	12500	31000	34000	8000	258

3/V 03 L3 — 2970 Nm

n_1 min^{-1}		i	n_2 min^{-1}	M_{n2} Nm	P_{n1} kW	Pt kW	P (IEC)			Rn_2 [N] MC/PC	MZ/PZ	HC	HZ	FZ	
							B5 / B14								
1500	3/V 03L3	395	3.8	2210	1.2	—	71	80	90	24000	27700	42000	50500	15400	268
	3/V 03L3	460	3.3	2310	1.1	—	71	80	90	25200	29100	43900	52900	16200	268
	3/V 03L3	502	3.0	2020	0.83	—	71	80	90	26000	30000	45100	54300	16700	268
	3/V 03L3	544	2.8	2730	1.1	—	71	80	90	26700	30800	46200	55600	17100	268
	3/V 03L3	623	2.4	2220	0.80	—	71	80	90	27900	32200	48100	57900	17900	268
	3/V 03L3	736	2.0	2720	0.83	—	71	80	90	29500	34100	50600	60800	18900	268
	3/V 03L3	793	1.9	2180	0.62	—	71	80	90	30200	34900	51700	62200	19400	268
	3/V 03L3	923	1.6	2670	0.65	—	71	80	90	31800	36700	54100	65100	20400	268
	3/V 03L3	1023	1.5	2710	0.66	—	71	80	—	32900	38000	55800	67200	21100	268
	3/V 03L3	1189	1.3	2340	0.49	—	71	80	—	34600	40000	58400	70300	22200	268
	3/V 03L3	1385	1.1	2820	0.51	—	71	80	—	36000	42000	61100	73600	23400	268
	3/V 03L3	1610	0.93	2440	0.38	—	71	80	—	36000	42000	64000	74000	24000	268
	3/V 03L3	1728	0.87	2850	0.41	—	71	80	—	36000	42000	64000	74000	24000	268
	3/V 03L3	2009	0.75	2440	0.30	—	71	80	—	36000	42000	64000	74000	24000	268
	3/V 03L3	2511	0.60	2300	0.23	—	71	80	—	36000	42000	64000	74000	24000	268

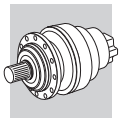

3/V 04 L3

3960 Nm

n_1 min^{-1}		i	n_2 min^{-1}	M_{n2} Nm	P_{n1} kW	Pt kW	P (IEC)					Rn_2 [N] MC/PC	MZ/PZ	HC	HZ	FZ	
							B5	B5 / B14									
1500	3/V 04L3	384	3.9	3510	1.9	—	71	80	90	100	112	23700	27400	41600	50100	15200	280
	3/V 04L3	453	3.3	3730	1.7	—	71	80	90	100	112	25100	29000	43700	52600	16100	280
	3/V 04L3	501	3.0	3010	1.4	—	71	80	90	100	112	26000	30000	45100	54200	16700	280
	3/V 04L3	568	2.6	3160	1.2	—	71	80	90	100	112	27100	31300	46800	56300	17400	280
	3/V 04L3	623	2.4	3530	1.2	—	71	80	90	100	112	27900	32200	48100	57900	17900	280
	3/V 04L3	710	2.1	2640	0.73	—	71	80	90	100	112	29200	33700	50000	60200	18700	280
	3/V 04L3	769	1.9	3330	0.90	—	71	80	90	100	112	29900	34600	51300	61700	19200	280
	3/V 04L3	887	1.7	2740	0.61	—	71	80	90	100	112	31400	36300	53500	64400	20100	280
	3/V 04L3	981	1.5	3860	0.91	—	71	80	90	100	112	32500	37500	55100	66300	20800	280
	3/V 04L3	1152	1.3	3570	0.67	—	71	80	90	100	112	34300	39600	57900	69600	22000	280
	3/V 04L3	1231	1.2	3610	0.68	—	71	80	90	100	112	35000	40400	59000	71000	22500	280
	3/V 04L3	1419	1.1	2970	0.45	—	71	80	90	100	112	36000	42000	61600	74000	23600	280
	3/V 04L3	1536	0.98	3740	0.56	—	71	80	90	100	112	36000	42000	63100	74000	24000	280
	3/V 04L3	1774	0.85	3000	0.37	—	71	80	90	100	112	36000	42000	64000	74000	24000	280
	3/V 04L3	1893	0.79	3000	0.37	—	71	80	90	100	112	36000	42000	64000	74000	24000	280
	3/V 04L3	2366	0.63	3000	0.29	—	71	80	90	100	112	36000	42000	64000	74000	24000	280

B

3/V 05 L3

5800 Nm

n_1 min^{-1}		i	n_2 min^{-1}	M_{n2} Nm	P_{n1} kW	Pt kW	P (IEC)					Rn_2 [N] MC/PC	MZ/PZ	HC	HZ	FZ	
							B5	B5 / B14									
1500	3/V 05L3	396	3.8	3760	1.9	—	71	80	90	100	112	24000	27700	42000	50500	15400	292
	3/V 05L3	462	3.3	4820	2.0	—	71	80	90	100	112	25300	29200	44000	52900	16200	292
	3/V 05L3	529	2.8	3920	1.5	—	71	80	90	100	112	26400	30500	45800	55100	17000	292
	3/V 05L3	576	2.6	4870	1.7	—	71	80	90	100	112	27200	31400	47000	56500	17400	292
	3/V 05L3	623	2.4	4460	1.6	—	71	80	90	100	112	27900	32200	48100	57900	17900	292
	3/V 05L3	715	2.1	4120	1.2	—	71	80	90	100	112	29200	33700	50200	60300	18800	292
	3/V 05L3	793	1.9	4200	1.1	—	71	80	90	100	112	30200	34900	51700	62200	19400	292
	3/V 05L3	894	1.7	4290	1.0	—	71	80	90	100	112	31500	36300	53600	64500	20200	292
	3/V 05L3	1057	1.4	4410	0.97	—	71	80	90	100	112	33300	38400	56400	67800	21400	292
	3/V 05L3	1116	1.3	4460	0.83	—	71	80	90	100	112	33900	39100	57300	69000	21700	292
	3/V 05L3	1231	1.2	5470	1.0	—	71	80	90	100	112	35000	40400	59000	71000	22500	292
	3/V 05L3	1431	1.0	4650	0.75	—	71	80	90	100	112	36000	42000	61700	74000	23600	292
	3/V 05L3	1674	0.90	4430	0.57	—	71	80	90	100	112	36000	42000	64000	74000	24000	292
	3/V 05L3	1786	0.84	4690	0.61	—	71	80	90	100	112	36000	42000	64000	74000	24000	292
	3/V 05L3	2232	0.67	4430	0.46	—	71	80	90	100	112	36000	42000	64000	74000	24000	292

3/V 06 L3

10840 Nm

n_1 min^{-1}		i	n_2 min^{-1}	M_{n2} Nm	P_{n1} kW	Pt kW	P (IEC)					Rn_2 [N] MC/PC	MZ/PZ	HC	HZ	FZ	
							B5	B5 / B14									
1500	3/V 06L3	395	3.8	7590	3.8	—	71	80	90	100	112	29900	33800	68700	80000	22400	304
	3/V 06L3	427	3.5	8820	4.1	—	71	80	90	100	112	30600	34700	70300	81800	23000	304
	3/V 06L3	527	2.8	7590	2.9	—	71	80	90	100	112	32900	37200	74900	87200	24700	304
	3/V 06L3	569	2.6	8560	3.0	—	71	80	90	100	112	33700	38200	76600	89200	25300	304
	3/V 06L3	661	2.3	9370	2.8	—	71	80	90	100	112	35500	40200	80100	93300	26600	304
	3/V 06L3	698	2.2	7540	2.1	—	71	80	90	100	112	36100	40900	81400	94800	27100	304
	3/V 06L3	791	1.9	7680	2.1	—	71	80	90	100	112	37600	42600	84500	98400	28300	304
	3/V 06L3	930	1.6	7890	1.7	—	71	80	90	100	112	39700	45000	88800	103400	29800	304
	3/V 06L3	992	1.5	9450	2.1	—	71	80	90	100	112	40600	46000	90500	105400	30500	304
	3/V 06L3	1153	1.3	8250	1.6	—	71	80	90	100	112	42700	48400	94700	110200	32100	304
	3/V 06L3	1212	1.2	7820	1.5	—	71	80	90	100	112	43400	49200	96100	111900	32600	304
	3/V 06L3	1395	1.1	8400	1.3	—	71	80	90	100	112	45000	51000	100200	116700	34200	304
	3/V 06L3	1768	0.85	8630	1.1	—	71	80	90	100	112	45000	51000	101000	119000	35000	304
	3/V 06L3	2139	0.70	8500	0.91	—	71	80	90	100	112	45000	51000	101000	119000	35000	304
	3/V 06L3	2588	0.58	7000	0.62	—	71	80	90	100	112	45000	51000	101000	119000	35000	304

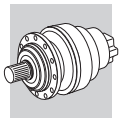

3/V 07 L3

15680 Nm

n_1 min^{-1}		i	n_2 min^{-1}	M_{n2} Nm	P_{n1} kW	Pt kW	P (IEC)					Rn_2 [N] MC/PC	MZ/PZ	HC	HZ	FZ	
							B5 / B14				B5						
1500	**3/V 07L3**	**386**	3.9	9020	4.5	—	80	90	100	112	132	32900	41300	73400	96100	28600	316
	3/V 07L3	**460**	3.3	12300	5.3	—	80	90	100	112	132	34900	43800	77300	101300	30400	316
	3/V 07L3	**507**	3.0	13600	5.3	—	80	90	100	112	132	36100	45300	79600	104300	31400	316
	3/V 07L3	**655**	2.3	14400	4.8	—	80	90	100	112	132	39300	49300	85900	112600	34100	316
	3/V 07L3	**761**	2.0	14200	4.0	—	80	90	100	112	132	41300	51800	89900	117800	35900	316
	3/V 07L3	**773**	1.9	9970	2.6	—	80	90	100	112	132	41500	52100	90300	118400	36100	316
	3/V 07L3	**920**	1.6	12300	2.9	—	80	90	100	112	132	44000	55200	95200	124700	38200	316
	3/V 07L3	**1015**	1.5	14400	3.1	—	80	90	100	112	132	45400	57000	98000	128400	39500	316
	3/V 07L3	**1159**	1.3	10600	2.0	—	80	90	100	112	132	47500	59600	102000	133700	41300	316
	3/V 07L3	**1288**	1.2	14500	2.5	—	80	90	100	112	132	49200	61700	105300	138000	42800	316
	3/V 07L3	**1411**	1.1	12300	2.0	—	80	90	100	112	132	50700	63600	108200	141800	44100	316
	3/V 07L3	**1545**	0.97	11000	1.6	—	80	90	100	112	132	52000	65000	109000	145000	45000	316
	3/V 07L3	**1964**	0.76	12300	1.5	—	80	90	100	112	132	52000	65000	109000	145000	45000	316
	3/V 07L3	**2150**	0.70	11000	1.2	—	80	90	100	112	132	52000	65000	109000	145000	45000	316
	3/V 07L3	**2472**	0.61	11000	1.1	—	80	90	100	112	132	52000	65000	109000	145000	45000	316

3/V 09 L3

23240 Nm

n_1 min^{-1}		i	n_2 min^{-1}	M_{n2} Nm	P_{n1} kW	Pt kW	P (IEC)				Rn_2 [N] MC/PC	MZ/PZ	HC	HZ	FZ	
							B5									
1500	**3/V 09L3**	**370**	4.1	13000	7.3	—	100	112	132	—	—	—	73600	94900	22600	328
	3/V 09L3	**442**	3.4	17700	8.4	—	100	112	132	—	—	—	77600	100100	24000	328
	3/V 09L3	**507**	3.0	14300	5.6	—	—	—	132	160	—	—	80900	104300	25100	328
	3/V 09L3	**655**	2.3	17600	5.6	—	100	112	132	—	—	—	87300	112600	27300	328
	3/V 09L3	**761**	2.0	14400	3.9	—	100	112	132	—	—	—	91300	117800	28700	328
	3/V 09L3	**800**	1.9	21400	5.8	—	100	112	132	—	—	—	92700	119600	29200	328
	3/V 09L3	**840**	1.8	20100	5.0	—	100	112	132	—	—	—	94100	121400	29700	328
	3/V 09L3	**1004**	1.5	18100	3.9	—	100	112	132	—	—	—	99300	128000	31500	328
	3/V 09L3	**1159**	1.3	16200	2.9	—	100	112	132	—	—	—	103600	133700	33000	328
	3/V 09L3	**1288**	1.2	21500	3.6	—	100	112	132	—	—	—	107000	138000	34200	328
	3/V 09L3	**1497**	1.0	18300	2.6	—	100	112	132	—	—	—	110000	144300	36000	328
	3/V 09L3	**1623**	0.92	14700	2.1	—	100	112	—	—	—	—	110000	145000	36000	328
	3/V 09L3	**1792**	0.84	22000	2.8	—	100	112	—	—	—	—	110000	145000	36000	328
	3/V 09L3	**2150**	0.70	17000	1.7	—	100	112	132	—	—	—	110000	145000	36000	328
	3/V 09L3	**2472**	0.61	17000	1.6	—	100	112	—	—	—	—	110000	145000	36000	328

3/V 10 L3

34120 Nm

n_1 min^{-1}		i	n_2 min^{-1}	M_{n2} Nm	P_{n1} kW	Pt kW	P (IEC)				Rn_2 [N] MC/PC	MZ/PZ	HC	HZ	FZ	
							B5									
1500	**3/V 10L3**	**436**	3.4	26700	12.2	—	—	—	132	160 (*)	—	—	91600	115200	43100	340
	3/V 10L3	**507**	3.0	25900	10.2	—	—	—	132	160 (*)	—	—	95800	120500	45300	340
	3/V 10L3	**560**	2.7	25900	9.2	—	—	—	132	160 (*)	—	—	98700	124100	46800	340
	3/V 10L3	**614**	2.4	21800	7.1	—	—	—	132	160 (*)	—	—	101500	127600	48300	340
	3/V 10L3	**701**	2.1	21900	6.0	—	—	—	132	160 (*)	—	—	105600	132800	50400	340
	3/V 10L3	**773**	1.9	22400	5.8	—	—	—	132	160 (*)	—	—	108700	136700	52100	340
	3/V 10L3	**920**	1.6	21800	4.9	—	100	112	132	—	—	—	114600	144100	55200	340
	3/V 10L3	**1004**	1.5	31800	6.9	—	100	112	132	—	—	—	117600	147900	56900	340
	3/V 10L3	**1120**	1.3	29100	5.6	—	100	112	132	—	—	—	121600	152800	59000	340
	3/V 10L3	**1227**	1.2	21800	3.9	—	100	112	132	—	—	—	124900	157100	60800	340
	3/V 10L3	**1411**	1.1	21800	3.3	—	100	112	132	—	—	—	130300	163800	63700	340

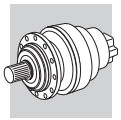

3/V 10 L4

34120 Nm

n_1 min^{-1}		i	n_2 min^{-1}	M_{n2} Nm	P_{n1} kW	Pt kW	P (IEC)					Rn_2 [N] MC/PC	MZ/PZ	HC	HZ	FZ	
							B5	B5 / B14									
1500	**3/V 10L4**	**1657**	0.91	33300	4.1	—	71	80	90	100	112	—	—	133000	166000	65000	341
	3/V 10L4	**1826**	0.82	26700	3.0	—	71	80	90	100	112	—	—	133000	166000	65000	341
	3/V 10L4	**2016**	0.74	29400	3.0	—	71	80	90	100	112	—	—	133000	166000	65000	341
	3/V 10L4	**2209**	0.68	32300	3.0	—	71	80	90	100	112	—	—	133000	166000	65000	341
	3/V 10L4	**2455**	0.61	34100	2.8	—	71	80	90	100	112	—	—	133000	166000	65000	341
	3/V 10L4	**2835**	0.53	30600	2.2	—	71	80	90	100	112	—	—	133000	166000	65000	341
	3/V 10L4	**3273**	0.46	34100	2.1	—	71	80	90	100	112	—	—	133000	166000	65000	341
	3/V 10L4	**3570**	0.42	30600	1.9	—	71	80	90	100	112	—	—	133000	166000	65000	341
	3/V 10L4	**4036**	0.37	30600	1.6	—	71	80	90	100	112	—	—	133000	166000	65000	341
	3/V 10L4	**4637**	0.32	30600	1.6	—	71	80	90	100	112	—	—	133000	166000	65000	341
	3/V 10L4	**5081**	0.30	34100	1.6	—	71	80	90	100	112	—	—	133000	166000	65000	341

B

3/V 11 L3

48330 Nm

n_1 min^{-1}		i	n_2 min^{-1}	M_{n2} Nm	P_{n1} kW	Pt kW	P (IEC)					Rn_2 [N] MC/PC	MZ/PZ	HC	HZ	FZ	
							B5										
1500	**3/V 11L3**	**430**	3.5	40900	18.7	—	—	—	—	160	180 (*)	—	—	107800	134200	42800	352
	3/V 11L3	**510**	2.9	34500	13.3	—	—	—	—	160	180 (*)	—	—	113400	141300	45400	352
	3/V 11L3	**551**	2.7	39000	13.9	—	—	—	—	160	180 (*)	—	—	116100	144600	46600	352
	3/V 11L3	**644**	2.3	40000	12.5	—	—	—	132	160	—	—	—	121700	151600	49000	352
	3/V 11L3	**720**	2.1	40200	12.0	—	—	—	132	160	—	—	—	125800	156700	50900	352
	3/V 11L3	**827**	1.8	41400	10.1	—	—	—	132	160	—	—	—	131100	163400	53300	352
	3/V 11L3	**900**	1.7	41000	10.0	—	100	112	132	—	—	—	—	134500	167600	54800	352
	3/V 11L3	**1004**	1.5	35700	8.0	—	100	112	132	—	—	—	—	139000	173200	56900	352
	3/V 11L3	**1103**	1.4	43200	8.4	—	—	—	132	160	—	—	—	143000	178100	58700	352
	3/V 11L3	**1274**	1.2	35100	6.0	—	100	112	132	—	—	—	—	149300	186000	61600	352
	3/V 11L3	**1378**	1.1	44700	7.1	—	100	112	132	—	—	—	—	152900	190400	63200	352
	3/V 11L3	**1636**	0.92	43000	5.8	—	100	112	132	—	—	—	—	157000	195000	65000	352
	3/V 11L3	**1963**	0.76	43000	4.9	—	100	112	132	—	—	—	—	157000	195000	65000	352
	3/V 11L3	**2329**	0.64	34000	3.3	—	100	112	132	—	—	—	—	157000	195000	65000	352

3/V 11 L4

48330 Nm

n_1 min^{-1}		i	n_2 min^{-1}	M_{n2} Nm	P_{n1} kW	Pt kW	P (IEC)					Rn_2 [N] MC/PC	MZ/PZ	HC	HZ	FZ	
							B5 / B14				B5						
1500	**3/V 11L4**	**2510**	0.60	48300	3.9	—	80	90	100	112	132	—	—	157000	195000	65000	353
	3/V 11L4	**2887**	0.52	48300	3.5	—	80	90	100	112	132	—	—	157000	195000	65000	353
	3/V 11L4	**3222**	0.47	46900	3.0	—	80	90	100	112	132	—	—	157000	195000	65000	353
	3/V 11L4	**3557**	0.42	42300	2.8	—	80	90	100	112	132	—	—	157000	195000	65000	353
	3/V 11L4	**4106**	0.37	48300	2.7	—	80	90	100	112	132	—	—	157000	195000	65000	353
	3/V 11L4	**4410**	0.34	45200	2.3	—	80	90	100	112	132	—	—	157000	195000	65000	353
	3/V 11L4	**5021**	0.30	48300	2.2	—	80	90	100	112	132	—	—	157000	195000	65000	353

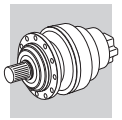

3/V 13 L3

57970 Nm

n_1 min^{-1}		i	n_2 min^{-1}	M_{n2} Nm	P_{n1} kW	Pt kW	P (IEC)					Rn_2 [N] MC/PC	MZ/PZ	HC	HZ	FZ	
							B5										
1500	**3/V 13L3**	**370**	4.1	39500	21	—	—	—	—	160	180 (*)	—	—	127300	150700	50200	364
	3/V 13L3	**425**	3.5	47300	21	—	—	—	—	160	180 (*)	—	—	132700	157100	52600	364
	3/V 13L3	**516**	2.9	52000	19.8	—	—	—	—	160	180 (*)	—	—	140700	166500	56100	364
	3/V 13L3	**567**	2.6	49300	17.1	—	—	—	—	160	180 (*)	—	—	144700	171300	57800	364
	3/V 13L3	**673**	2.2	50700	14.8	—	—	—	—	160	180 (*)	—	—	152300	180300	61200	364
	3/V 13L3	**741**	2.0	45800	13.2	—	—	—	132	160	—	—	—	156800	185500	63200	364
	3/V 13L3	**810**	1.9	44500	10.8	—	—	—	—	160	180 (*)	—	—	161100	190600	65100	364
	3/V 13L3	**870**	1.7	53800	13.2	—	—	—	132	160	—	—	—	164500	194700	66700	364
	3/V 13L3	**1009**	1.5	54300	10.8	—	—	—	132	160	—	—	—	172000	203600	70100	364
	3/V 13L3	**1088**	1.4	51200	10.3	—	100	112	132	—	—	—	—	175900	208200	71900	364
	3/V 13L3	**1291**	1.2	52800	9.0	—	100	112	132	—	—	—	—	185200	219200	76100	364
	3/V 13L3	**1418**	1.1	57400	8.9	—	100	112	132	—	—	—	—	190500	225400	78500	364
	3/V 13L3	**1620**	0.93	49000	6.5	—	—	—	132	160	—	—	—	192000	231000	80000	364
	3/V 13L3	**1682**	0.89	57970	7.6	—	100	112	132	—	—	—	—	192000	231000	80000	364
	3/V 13L3	**2019**	0.74	57970	6.5	—	100	112	132	—	—	—	—	192000	231000	80000	364
	3/V 13L3	**2430**	0.62	49000	4.5	—	100	112	132	—	—	—	—	192000	231000	80000	364

B

3/V 13 L4

57970 Nm

n_1 min^{-1}		i	n_2 min^{-1}	M_{n2} Nm	P_{n1} kW	Pt kW	P (IEC)					Rn_2 [N] MC/PC	MZ/PZ	HC	HZ	FZ	
							B5 / B14				B5						
1500	**3/V 13L4**	**2773**		55400	4.5	—	80	90	100	112	132	—	—	192000	231000	80000	365
	3/V 13L4	**3263**	0.46	55400	3.5	—	80	90	100	112	132	—	—	192000	231000	80000	365
	3/V 13L4	**3515**	0.43	57970	3.4	—	80	90	100	112	132	—	—	192000	231000	80000	365
	3/V 13L4	**4046**	0.37	55400	3.1	—	80	90	100	112	132	—	—	192000	231000	80000	365
	3/V 13L4	**4536**	0.33	57970	2.9	—	80	90	100	112	132	—	—	192000	231000	80000	365
	3/V 13L4	**5046**	0.30	53000	2.4	—	80	90	100	112	132	—	—	192000	231000	80000	365

3/V 14 L3

84000 Nm

n_1 min^{-1}		i	n_2 min^{-1}	M_{n2} Nm	P_{n1} kW	Pt kW	P (IEC)					Rn_2 [N] MC/PC	MZ/PZ	HC	HZ	FZ	
							B5										
1500	**3/V 14L3**	**397**	3.8	46100	22	—	—	—	—	160	180 (*)	—	—	138800	163000	57800	376
	3/V 14L3	**446**	3.4	47700	21	—	—	—	—	160	180 (*)	—	—	143800	168800	60100	376
	3/V 14L3	**498**	3.0	57800	22	—	—	—	—	160	180 (*)	—	—	148600	174500	62300	376
	3/V 14L3	**579**	2.6	57100	18.7	—	—	—	—	160	180 (*)	—	—	155500	182600	65500	376
	3/V 14L3	**665**	2.3	70200	21	—	—	—	—	160	180 (*)	—	—	162000	190200	68600	376
	3/V 14L3	**695**	2.2	43000	13.2	—	—	—	132	160	—	—	—	164300	192800	69700	376
	3/V 14L3	**794**	1.9	49300	12.5	—	—	—	132	160	—	—	—	170900	200700	72800	376
	3/V 14L3	**893**	1.7	55200	13.2	—	—	—	132	160	—	—	—	177000	207800	75700	376
	3/V 14L3	**997**	1.5	61900	12.5	—	—	—	132	160	—	—	—	183000	214800	78500	376
	3/V 14L3	**1116**	1.3	52500	10.3	—	100	112	132	—	—	—	—	189300	222200	81500	376
	3/V 14L3	**1324**	1.1	62300	10.3	—	100	112	132	—	—	—	—	199300	233900	86300	376
	3/V 14L3	**1339**	1.1	47700	8.0	—	100	112	132	—	—	—	—	199900	234700	86700	376
	3/V 14L3	**1589**	0.94	56600	8.0	—	100	112	132	—	—	—	—	206000	243000	90000	376
	3/V 14L3	**1662**	0.90	75500	10.0	—	100	112	132	—	—	—	—	206000	243000	90000	376
	3/V 14L3	**1994**	0.75	71000	8.0	—	100	112	132	—	—	—	—	206000	243000	90000	376
	3/V 14L3	**2318**	0.65	66800	6.5	—	100	112	132	—	—	—	—	206000	243000	90000	376

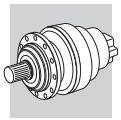

3/V 14 L4

84000 Nm

n_1 min^{-1}		i	n_2 min^{-1}	M_{n2} Nm	P_{n1} kW	Pt kW	P (IEC)				Rn$_2$ [N] MC/PC	MZ/PZ	HC	HZ	FZ	
							B5									
1500	**3/V 14L4**	**2504**	0.60	83200	7.4	—	100	112	132	—	—	—	206000	243000	90000	377
	3/V 14L4	**2782**	0.54	83200	6.4	—	100	112	132	—	—	—	206000	243000	90000	377
	3/V 14L4	**3182**	0.47	80100	5.2	—	100	112	132	—	—	—	206000	243000	90000	377
	3/V 14L4	**3472**	0.43	75500	4.5	—	—	—	132	160	—	—	206000	243000	90000	377
	3/V 14L4	**3993**	0.38	75500	3.9	—	100	112	132	—	—	—	206000	243000	90000	377
	3/V 14L4	**4312**	0.35	83200	4.3	—	100	112	132	—	—	—	206000	243000	90000	377
	3/V 14L4	**4959**	0.30	83200	3.7	—	100	112	132	—	—	—	206000	243000	90000	377

B

3/V 15 L3

105000 Nm

n_1 min^{-1}		i	n_2 min^{-1}	M_{n2} Nm	P_{n1} kW	Pt kW	P (IEC)					Rn$_2$ [N] MC/PC	MZ/PZ	HC	HZ	FZ	
							B5										
1500	**3/V 15L3**	**386**	3.9	67400	33	—	132	160	180	200	225	—	—	137700	161700	57300	388
	3/V 15L3	**446**	3.4	65100	29	—	132	160	180	200	225	—	—	143800	168800	60100	388
	3/V 15L3	**498**	3.0	85600	33	—	132	160	180	200	225	—	—	148600	174500	62300	388
	3/V 15L3	**560**	2.7	81700	29	—	132	160	180	200	225	—	—	153900	180700	64800	388
	3/V 15L3	**665**	2.3	88300	26	—	132	160	180	200	225	—	—	162000	190200	68600	388
	3/V 15L3	**840**	1.8	80400	19.2	—	132	160	180	200	225	—	—	173800	204100	74200	388
	3/V 15L3	**997**	1.5	93500	18.9	—	132	160	180	200	225	—	—	183000	214800	78500	388
	3/V 15L3	**1120**	1.3	92200	17.6	—	132	160	180	200	225	—	—	189500	222500	81600	388
	3/V 15L3	**1329**	1.1	97300	15.7	—	132	160	180	200	225	—	—	199500	234200	86400	388
	3/V 15L3	**1400**	1.1	86900	13.6	—	132	160	180	200	225	—	—	202600	237900	88000	388
	3/V 15L3	**1662**	0.90	99000	13.1	—	132	160	180	200	225	—	—	206000	243000	90000	388
	3/V 15L3	**1994**	0.75	94300	10.8	—	132	160	180	200	225	—	—	206000	243000	90000	388
	3/V 15L3	**2318**	0.65	83500	8.2	—	132	160	180	200	225	—	—	206000	243000	90000	388

3/V 15 L4

105000 Nm

n_1 min^{-1}		i	n_2 min^{-1}	M_{n2} Nm	P_{n1} kW	Pt kW	P (IEC)				Rn$_2$ [N] MC/PC	MZ/PZ	HC	HZ	FZ	
							B5									
1500	**3/V 15L4**	**2780**	0.54	105000	7.7	—	—	—	132	160 (*)	—	—	206000	243000	90000	389
	3/V 15L4	**3300**	0.45	105000	6.5	—	—	—	132	160 (*)	—	—	206000	243000	90000	389
	3/V 15L4	**3489**	0.43	99000	5.8	—	—	—	132	160 (*)	—	—	206000	243000	90000	389
	3/V 15L4	**4171**	0.36	105000	5.4	—	100	112	132	—	—	—	206000	243000	90000	389
	3/V 15L4	**4950**	0.30	105000	4.6	—	100	112	132	—	—	—	206000	243000	90000	389
	3/V 15L4	**5234**	0.29	99000	4.1	—	100	112	132	—	—	—	206000	243000	90000	389

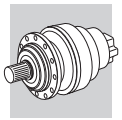

3/V 16 L3

138820 Nm

n_1 min^{-1}		i	n_2 min^{-1}	M_{n2} Nm	P_{n1} kW	Pt kW	P (IEC) - B5					Rn_2 [N] MC/PC	MZ/PZ	HC	HZ	FZ	
1500	**3/V 16L3**	**397**	3.8	99700	48	—	132	160	180	200	225	—	—	230900	256800	96300	400
	3/V 16L3	**446**	3.4	93400	41	—	132	160	180	200	225	—	—	239100	265900	100100	400
	3/V 16L3	**530**	2.8	110900	41	—	132	160	180	200	225	—	—	251700	279900	106000	400
	3/V 16L3	**669**	2.2	84000	25	—	132	160	180	200	225	—	—	270000	300300	114600	400
	3/V 16L3	**794**	1.9	99700	25	—	132	160	180	200	225	—	—	284200	316100	121400	400
	3/V 16L3	**893**	1.7	100800	24	—	132	160	180	200	225	—	—	294300	327300	126200	400
	3/V 16L3	**1059**	1.4	119600	24	—	132	160	180	200	225	—	—	309800	344600	133600	400
	3/V 16L3	**1324**	1.1	112100	18.6	—	132	160	180	200	225	—	—	331300	368500	143900	400
	3/V 16L3	**1589**	0.94	112100	15.5	—	132	160	180	200	225	—	—	345000	385000	150000	400

B

3/V 16 L4

138820 Nm

n_1 min^{-1}		i	n_2 min^{-1}	M_{n2} Nm	P_{n1} kW	Pt kW	P (IEC) - B5					Rn_2 [N] MC/PC	MZ/PZ	HC	HZ	FZ	
1500	**3/V 16L4**	**1826**	0.82	108300	12.2	—	—	—	132	160 (*)		—	—	345000	385000	150000	401
	3/V 16L4	**2167**	0.69	128500	12.2	—	—	—	132	160 (*)		—	—	345000	385000	150000	401
	3/V 16L4	**2343**	0.64	138800	12.1	—	—	—	132	160 (*)		—	—	345000	385000	150000	401
	3/V 16L4	**2738**	0.55	114100	9.0	—	100	112	132	—		—	—	345000	385000	150000	401
	3/V 16L4	**3250**	0.46	135500	9.0	—	100	112	132	—		—	—	345000	385000	150000	401
	3/V 16L4	**3514**	0.43	138800	8.5	—	100	112	132	—		—	—	345000	385000	150000	401
	3/V 16L4	**4171**	0.36	138800	7.2	—	100	112	132	—		—	—	345000	385000	150000	401
	3/V 16L4	**4950**	0.30	124000	5.4	—	100	112	132	—		—	—	345000	385000	150000	401

3/V 17 L3

208110 Nm

n_1 min^{-1}		i	n_2 min^{-1}	M_{n2} Nm	P_{n1} kW	Pt kW	P (IEC) - B5					Rn_2 [N] MC/PC	MZ/PZ	HC	HZ	FZ	
1500	**3/V 17L3**	**405**	3.7	126000	58	—	132	160	180	200	225	—	—	298600	317900	96900	410
	3/V 17L3	**425**	3.5	106700	48	—	132	160	180	200	225	—	—	303000	322600	98500	410
	3/V 17L3	**512**	2.9	128400	48	—	132	160	180	200	225	—	—	320300	341000	104800	410
	3/V 17L3	**567**	2.6	118700	41	—	132	160	180	200	225	—	—	330300	351700	108500	410
	3/V 17L3	**608**	2.5	134700	42	—	132	160	180	200	225	—	—	337200	359000	111000	410
	3/V 17L3	**683**	2.2	142900	41	—	132	160	180	200	225	—	—	349200	371800	115400	410
	3/V 17L3	**810**	1.9	141200	34	—	132	160	180	200	225	—	—	367600	391400	122100	410
	3/V 17L3	**851**	1.8	106700	25	—	132	160	180	200	225	—	—	373000	397100	124200	410
	3/V 17L3	**1024**	1.5	128400	25	—	132	160	180	200	225	—	—	394300	419900	132100	410
	3/V 17L3	**1134**	1.3	128000	24	—	132	160	180	200	225	—	—	406600	432900	136600	410
	3/V 17L3	**1215**	1.2	150900	25	—	132	160	180	200	225	—	—	415100	442000	139800	410
	3/V 17L3	**1365**	1.1	154100	24	—	132	160	180	200	225	—	—	429900	457700	145400	410

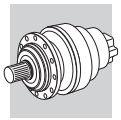

3/V 17 L4

208110 Nm

n_1 min^{-1}		i	n_2 min^{-1}	M_{n2} Nm	P_{n1} kW	Pt kW	P (IEC)					Rn$_2$ [N] MC/PC	MZ/PZ	HC	HZ	FZ	
							B5										
1500	**3/V 17L4**	**1780**	0.84	184300	21	—	—	—	—	160	180 (*)	—	—	442000	470000	150000	411
	3/V 17L4	**2065**	0.73	184300	17.5	—	—	—	—	160	180 (*)	—	—	442000	470000	150000	411
	3/V 17L4	**2485**	0.60	155000	12.2	—	—	—	—	160	180 (*)	—	—	442000	470000	150000	411
	3/V 17L4	**2773**	0.54	166400	13.2	—	—	—	132	160	—	—	—	442000	470000	150000	411
	3/V 17L4	**3168**	0.47	190800	12.5	—	—	—	132	160	—	—	—	442000	470000	150000	411
	3/V 17L4	**3583**	0.42	170000	9.6	—	—	—	—	160	180 (*)	—	—	442000	470000	150000	411
	3/V 17L4	**4129**	0.36	184300	9.3	—	—	—	132	160	—	—	—	442000	470000	150000	411
	3/V 17L4	**4449**	0.34	203000	10.3	—	100	112	132	—	—	—	—	442000	470000	150000	411
	3/V 17L4	**4970**	0.30	155000	6.5	—	—	—	132	160	—	—	—	442000	470000	150000	411

B

3/V 18 L4

280580 Nm

n_1 min^{-1}		i	n_2 min^{-1}	M_{n2} Nm	P_{n1} kW	Pt kW	P (IEC)					Rn$_2$ [N] MC/PC	MZ/PZ	HC	HZ	FZ	
							B5										
1500	**3/V 18L4**	**765**	2.0	185000	47	—	132	160	180	200	225	—	—	453300	462600	159800	420
	3/V 18L4	**982**	1.5	237400	47	—	132	160	180	200	225	—	—	488500	498600	173600	420
	3/V 18L4	**1165**	1.3	275600	46	—	132	160	180	200	225	—	—	503000	524900	183800	420
	3/V 18L4	**1232**	1.2	276700	43	—	132	160	180	200	225	—	—	503000	533700	187300	420
	3/V 18L4	**1473**	1.0	255400	34	—	132	160	180	200	225	—	—	503000	563100	198800	420
	3/V 18L4	**1748**	0.86	280580	31	—	132	160	180	200	225	—	—	503000	565000	200000	420
	3/V 18L4	**1848**	0.81	280580	30	—	132	160	180	200	225	—	—	503000	565000	200000	420
	3/V 18L4	**2295**	0.65	212900	19.2	—	132	160	180	200	225	—	—	503000	565000	200000	420
	3/V 18L4	**2464**	0.61	280580	23	—	132	160	180	200	225	—	—	503000	565000	200000	420
	3/V 18L4	**2945**	0.51	273300	19.2	—	132	160	180	200	225	—	—	503000	565000	200000	420
	3/V 18L4	**3495**	0.43	280580	16.6	—	132	160	180	200	225	—	—	503000	565000	200000	420
	3/V 18L4	**3696**	0.41	280580	15.7	—	132	160	180	200	225	—	—	503000	565000	200000	420
	3/V 18L4	**4386**	0.34	280580	13.3	—	132	160	180	200	225	—	—	503000	565000	200000	420
	3/V 18L4	**5099**	0.29	280580	11.4	—	132	160	180	200	225	—	—	503000	565000	200000	420

3/V 19 L4

476410 Nm

n_1 min^{-1}		i	n_2 min^{-1}	M_{n2} Nm	P_{n1} kW	Pt kW	P (IEC)					Rn$_2$ [N] MC/PC	MZ/PZ	HC	HZ	FZ	
							B5										
1500	**3/V 19L4**	**2582**	0.58	365200	29	—	132	160	180	200	225	—	—	638000	702000	200000	430
	3/V 19L4	**3231**	0.46	367600	23	—	132	160	180	200	225	—	—	638000	702000	200000	430
	3/V 19L4	**4095**	0.37	380000	19.2	—	132	160	180	200	225	—	—	638000	702000	200000	430
	3/V 19L4	**4457**	0.34	359700	16.3	—	132	160	180	200	225	—	—	638000	702000	200000	430
	3/V 19L4	**5164**	0.29	403700	17.3	—	132	160	180	200	225	—	—	638000	702000	200000	430

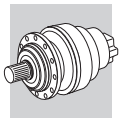

3/V 21 L4

655740 Nm

n_1 min^{-1}		i	n_2 min^{-1}	M_{n2} Nm	P_{n1} kW	Pt kW	P (IEC)					Rn_2 [N] MC/PC	MZ/PZ	HC	HZ	FZ	
							B5										V
1500	**3/V 21L4**	**1062**	1.4	443000	79	—	132	160	180	200	225	—	—	705200	836300	1069400	440
	3/V 21L4	**1260**	1.2	425500	65	—	132	160	180	200	225	—	—	742400	880400	1132200	440
	3/V 21L4	**1517**	0.99	512200	65	—	132	160	180	200	225	—	—	779000	923000	1200000	440
	3/V 21L4	**1800**	0.83	536400	57	—	132	160	180	200	225	—	—	779000	923000	1200000	440
	3/V 21L4	**1890**	0.79	460000	48	—	132	160	180	200	225	—	—	779000	923000	1200000	440
	3/V 21L4	**2275**	0.66	553700	48	—	132	160	180	200	225	—	—	779000	923000	1200000	440
	3/V 21L4	**2520**	0.60	511700	41	—	132	160	180	200	225	—	—	779000	923000	1200000	440
	3/V 21L4	**2700**	0.56	536400	39	—	132	160	180	200	225	—	—	779000	923000	1200000	440
	3/V 21L4	**3600**	0.42	536400	30	—	132	160	180	200	225	—	—	779000	923000	1200000	440
	3/V 21L4	**3780**	0.40	460000	25	—	132	160	180	200	225	—	—	779000	923000	1200000	440
	3/V 21L4	**4550**	0.33	553700	25	—	132	160	180	200	225	—	—	779000	923000	1200000	440
	3/V 21L4	**5040**	0.30	552000	24	—	132	160	180	200	225	—	—	779000	923000	1200000	440

25.6 3/A - COMBINED UNITS RATING CHARTS

Reading the rating chart.

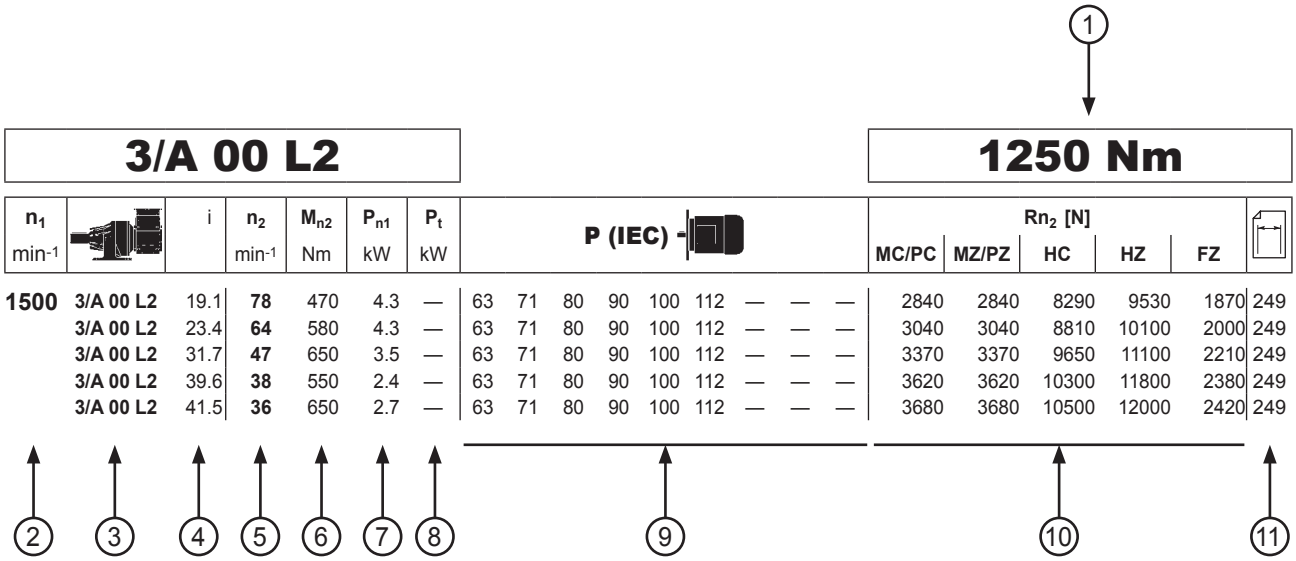

1	Reference torque
2	Gearbox drive speed
3	Frame size of combined planetary + bevel helical unit
4	Gear ratio
5	Gearbox output speed
6	Gearbox rated output torque based on: - service factor f_S=1 - 10000 h theoretical lifetime
7	Gearbox rated input power, based on: - service factor f_S=1 - 10000 h theoretical lifetime
8	Gearbox thermal capacity
9	Frame size of available IEC motor
10	Permitted overhung loading on output shaft, based on: - service factor f_S=1 - 10000 h theoretical lifetime - speed of output n_2 For forces not applied at shaft middlepoint, see diagrams provided in the specific gearbox overall dimensioning pages
11	Dimensions page

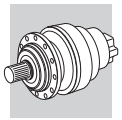

3/A 00 L2 — 1250 Nm

n_1 min^{-1}		i	n_2 min^{-1}	M_{n2} Nm	P_{n1} kW	Pt kW	P (IEC)									Rn_2 [N] MC/PC	MZ/PZ	HC	HZ	FZ	
1500	**3/A 00 L2**	**19.1**	78	470	4.3	—	63	71	80	90	100	112	—	—	—	2840	2840	8290	9530	1870	249
	3/A 00 L2	**23.4**	64	580	4.3	—	63	71	80	90	100	112	—	—	—	3040	3040	8810	10100	2000	249
	3/A 00 L2	**31.7**	47	650	3.5	—	63	71	80	90	100	112	—	—	—	3370	3370	9650	11100	2210	249
	3/A 00 L2	**39.6**	38	550	2.4	—	63	71	80	90	100	112	—	—	—	3620	3620	10300	11800	2380	249
	3/A 00 L2	**41.5**	36	650	2.7	—	63	71	80	90	100	112	—	—	—	3680	3680	10500	12000	2420	249
	3/A 00 L2	**51.8**	28.9	550	1.8	—	63	71	80	90	100	112	—	—	—	3960	3960	11200	12800	2610	249
	3/A 00 L2	**61.2**	24.5	650	1.8	—	63	71	80	90	100	112	—	—	—	4190	4190	11700	13500	2750	249
	3/A 00 L2	**71.0**	21.1	650	1.6	—	63	71	80	90	100	112	—	—	—	4400	4400	12300	14100	2890	249
	3/A 00 L2	**80.2**	18.7	650	1.4	—	63	71	80	90	100	112	—	—	—	4580	4580	12700	14600	3010	249
	3/A 00 L2	**88.6**	16.9	550	1.1	—	63	71	80	90	100	112	—	—	—	4740	4740	13100	15100	3120	249
	3/A 00 L2	**100**	15.0	550	0.95	—	63	71	80	90	100	112	—	—	—	4940	4940	13600	15600	3240	249
	3/A 00 L2	**107**	14.0	650	1.0	—	63	71	80	90	100	112	—	—	—	5050	5050	13900	16000	3320	249
	3/A 00 L2	**134**	11.2	550	0.71	—	63	71	80	90	100	112	—	—	—	5440	5440	14900	17100	3580	249
	3/A 00 L2	**171**	8.8	550	0.55	—	63	71	80	90	100	112	—	—	—	5900	5900	16000	18400	3880	249
	3/A 00 L2	**203**	7.4	650	0.55	—	63	71	80	90	100	112	—	—	—	6240	6240	16800	19300	4100	249
	3/A 00 L2	**219**	6.9	620	0.49	—	63	71	80	90	100	112	—	—	—	6400	6400	17200	19800	4210	249
	3/A 00 L2	**253**	5.9	550	0.37	—	63	71	80	90	100	112	—	—	—	6720	6720	18000	20700	4420	249
	3/A 00 L2	**296**	5.1	650	0.38	—	63	71	80	90	100	112	—	—	—	7080	7080	18900	21700	4660	249
	3/A 00 L2	**319**	4.7	440	0.24	—	63	71	—	—	—	—	—	—	—	7260	7260	19300	22100	4770	249
	3/A 00 L2	**369**	4.1	560	0.26	—	63	71	80	90	100	112	—	—	—	7630	7630	20100	23100	5010	249
	3/A 00 L2	**391**	3.8	540	0.24	—	63	71	—	—	—	—	—	—	—	7770	7770	20500	23500	5110	249
	3/A 00 L2	**441**	3.4	690	0.27	—	63	71	—	—	—	—	—	—	—	8090	8090	21200	24400	5320	249
	3/A 00 L2	**550**	2.7	590	0.19	—	63	71	—	—	—	—	—	—	—	8710	8710	22700	26100	5730	249
	3/A 00 L2	**660**	2.3	610	0.16	—	63	71	—	—	—	—	—	—	—	9250	9250	24000	27500	6080	249

3/A 01 L2 — 2460 Nm

n_1 min^{-1}		i	n_2 min^{-1}	M_{n2} Nm	P_{n1} kW	Pt kW	P (IEC)									Rn_2 [N] MC/PC	MZ/PZ	HC	HZ	FZ	
1500	**3/A 01 L2**	**18.8**	80	710	6.5	—	—	—	80	90	100	112	—	—	—	2830	2830	8250	9470	1860	259
	3/A 01 L2	**23.0**	65	870	6.5	—	—	—	80	90	100	112	—	—	—	3020	3020	8760	10100	1990	259
	3/A 01 L2	**31.2**	48	1180	6.5	—	—	—	80	90	100	112	—	—	—	3340	3340	9600	11000	2200	259
	3/A 01 L2	**35.8**	42	760	3.7	—	—	—	80	90	100	112	—	—	—	3500	3500	10000	11500	2300	259
	3/A 01 L2	**40.1**	37	870	3.7	—	63	71	80	90	100	112	—	—	—	3640	3640	10300	11900	2390	259
	3/A 01 L2	**43.9**	34	930	3.7	—	—	—	80	90	100	112	—	—	—	3750	3750	10600	12200	2470	259
	3/A 01 L2	**49.1**	31	830	2.9	—	63	71	80	90	100	112	—	—	—	3890	3890	11000	12600	2560	259
	3/A 01 L2	**54.2**	27.7	1180	3.7	—	63	71	80	90	100	112	—	—	—	4020	4020	11300	13000	2650	259
	3/A 01 L2	**59.4**	25.2	1260	3.7	—	—	—	80	90	100	112	—	—	—	4150	4150	11600	13400	2730	259
	3/A 01 L2	**74.2**	20.2	1150	2.7	—	—	—	80	90	100	112	—	—	—	4470	4470	12400	14300	2940	259
	3/A 01 L2	**81.3**	18.4	1300	2.8	—	63	71	80	90	100	112	—	—	—	4610	4610	12800	14700	3030	259
	3/A 01 L2	**102**	14.8	1150	2.0	—	63	71	80	90	100	112	—	—	—	4960	4960	13700	15700	3260	259
	3/A 01 L2	**133**	11.3	1300	1.7	—	63	71	80	90	100	112	—	—	—	5430	5430	14800	17100	3570	259
	3/A 01 L2	**166**	9.0	1150	1.2	—	63	71	80	90	100	112	—	—	—	5850	5850	15900	18200	3840	259
	3/A 01 L2	**184**	8.1	1030	0.97	—	63	71	80	90	100	112	—	—	—	6050	6050	16400	18800	3980	259
	3/A 01 L2	**204**	7.3	1300	1.1	—	63	71	80	90	100	112	—	—	—	6260	6260	16900	19400	4120	259
	3/A 01 L2	**220**	6.8	830	0.65	—	63	71	80	90	100	112	—	—	—	6410	6410	17200	19800	4220	259
	3/A 01 L2	**255**	5.9	1150	0.78	—	63	71	80	90	100	112	—	—	—	6740	6740	18000	20700	4430	259
	3/A 01 L2	**269**	5.6	1010	0.65	—	63	71	80	90	100	112	—	—	—	6860	6860	18300	21000	4510	259
	3/A 01 L2	**311**	4.8	1150	0.64	—	63	71	80	90	100	112	—	—	—	7200	7200	19100	22000	4740	259
	3/A 01 L2	**364**	4.1	1340	0.64	—	63	71	80	90	100	112	—	—	—	7590	7590	20100	23000	4990	259
	3/A 01 L2	**393**	3.8	830	0.36	—	63	71	—	—	—	—	—	—	—	7790	7790	20500	23600	5120	259
	3/A 01 L2	**454**	3.3	1150	0.44	—	63	71	80	90	100	112	—	—	—	8170	8170	21400	24600	5370	259
	3/A 01 L2	**533**	2.8	1120	0.36	—	63	71	—	—	—	—	—	—	—	8620	8620	22500	25800	5660	259
	3/A 01 L2	**665**	2.3	1150	0.30	—	63	71	—	—	—	—	—	—	—	9280	9280	24000	27600	6100	259

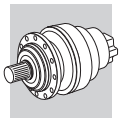

3/A 03 L2 — 2970 Nm

n_1 min^{-1}		i	n_2 min^{-1}	M_{n2} Nm	P_{n1} kW	Pt kW	P (IEC)									Rn_2 [N] MC/PC	MZ/PZ	HC	HZ	FZ	
1500	3/A 03 L2	19.4	77	1050	9.3	—	—	—	80	90	100	112	—	—	—	8790	10100	17000	20500	5640	269
	3/A 03 L2	23.0	65	1240	9.3	—	—	—	80	90	100	112	—	—	—	9290	10700	17900	21500	5960	269
	3/A 03 L2	28.8	52	1550	9.3	—	—	—	80	90	100	112	—	—	—	10000	11600	19100	23000	6430	269
	3/A 03 L2	33.5	45	1800	9.3	—	—	—	80	90	100	112	—	—	—	10500	12200	20000	24100	6760	269
	3/A 03 L2	40.5	37	1650	7.0	—	—	—	80	90	100	112	—	—	—	11200	13000	21200	25500	7200	269
	3/A 03 L2	43.4	35	1800	7.2	—	—	—	80	90	100	112	—	—	—	11500	13300	21600	26000	7370	269
	3/A 03 L2	52.5	28.6	1650	5.4	—	—	—	80	90	100	112	—	—	—	12200	14100	22900	27600	7850	269
	3/A 03 L2	52.5	28.6	1650	5.4	—	—	—	80	90	100	112	—	—	—	12200	14100	22900	27600	7850	269
	3/A 03 L2	62.9	23.8	1550	4.2	—	63	71	80	90	100	112	—	—	—	13000	15000	24200	29100	8340	269
	3/A 03 L2	73.2	20.5	1800	4.2	—	63	71	80	90	100	112	—	—	—	13700	15800	25300	30400	8770	269
	3/A 03 L2	88.5	16.9	1650	3.2	—	63	71	80	90	100	112	—	—	—	14600	16800	26800	32200	9340	269
	3/A 03 L2	96.9	15.5	1690	3.0	—	63	71	80	90	100	112	—	—	—	15000	17300	27500	33100	9630	269
	3/A 03 L2	182	8.3	1830	1.7	—	63	71	80	90	100	112	—	—	—	18500	21400	33200	40000	11900	269
	3/A 03 L2	220	6.8	1650	1.3	—	63	71	80	90	100	112	—	—	—	19700	22800	35200	42300	12700	269
	3/A 03 L2	269	5.6	1840	1.2	—	63	71	80	90	100	112	—	—	—	21100	24400	37400	45000	13500	269
	3/A 03 L2	269	5.6	1840	1.2	—	63	71	80	90	100	112	—	—	—	21100	24400	37400	45000	13500	269
	3/A 03 L2	326	4.6	1660	0.88	—	63	71	80	90	100	112	—	—	—	22500	26000	39600	47600	14400	269
	3/A 03 L2	352	4.3	2020	0.99	—	63	71	80	90	100	112	—	—	—	23100	26600	40500	48800	14800	269
	3/A 03 L2	409	3.7	1940	0.82	—	63	71	80	90	100	112	—	—	—	24300	28000	42400	51000	15600	269
	3/A 03 L2	495	3.0	1720	0.60	—	63	71	80	90	100	112	—	—	—	25900	29800	44900	54000	16600	269
	3/A 03 L2	574	2.6	1740	0.52	—	63	71	80	90	100	112	—	—	—	27200	31400	46900	56500	17400	269
	3/A 03 L2	605	2.5	1800	0.51	—	63	71	80	90	100	112	—	—	—	27600	31900	47700	57400	17700	269
	3/A 03 L2	731	2.1	1800	0.42	—	63	71	80	90	100	112	—	—	—	29400	34000	50500	60700	18900	269

B

3/A 04 L2 — 3960 Nm

n_1 min^{-1}		i	n_2 min^{-1}	M_{n2} Nm	P_{n1} kW	Pt kW	P (IEC)									Rn_2 [N] MC/PC	MZ/PZ	HC	HZ	FZ	
1500	3/A 04 L2	18.7	80	1920	17.7	—	—	—	80	90	100	112	132	—	—	8680	10000	16800	20200	5570	281
	3/A 04 L2	22.1	68	2270	17.7	—	—	—	80	90	100	112	132	—	—	9170	10600	17700	21300	5880	281
	3/A 04 L2	25.6	59	1920	12.9	—	—	—	80	90	100	112	132	—	—	9630	11100	18500	22200	6180	281
	3/A 04 L2	27.7	54	2830	17.6	—	—	—	80	90	100	112	132	—	—	9890	11400	18900	22800	6350	281
	3/A 04 L2	30.2	50	2270	12.9	—	—	—	80	90	100	112	132	—	—	10200	11700	19400	23300	6530	281
	3/A 04 L2	35.3	43	2270	11.1	—	—	—	80	90	100	112	132	—	—	10700	12400	20300	24500	6880	281
	3/A 04 L2	39.1	38	2270	10.0	—	—	—	80	90	100	112	132	—	—	11100	12800	21000	25200	7120	281
	3/A 04 L2	44.3	34	2850	11.1	—	—	—	80	90	100	112	132	—	—	11600	13300	21800	26200	7420	281
	3/A 04 L2	49.7	30	2270	7.9	—	63	71	80	90	100	112	132	—	—	12000	13900	22500	27100	7710	281
	3/A 04 L2	54.5	27.5	2390	7.5	—	—	—	80	90	100	112	132	—	—	12400	14300	23200	27900	7950	281
	3/A 04 L2	62.4	24.0	2850	7.9	—	63	71	80	90	100	112	132	—	—	13000	15000	24100	29000	8320	281
	3/A 04 L2	68.4	21.9	2510	6.3	—	—	—	80	90	100	112	132	—	—	13400	15400	24800	29800	8580	281
	3/A 04 L2	81.7	18.4	2370	5.0	—	63	71	80	90	100	112	132	—	—	14200	16400	26200	31500	9100	281
	3/A 04 L2	90.7	16.5	2390	4.5	—	—	—	80	90	100	112	132	—	—	14700	17000	27000	32500	9420	281
	3/A 04 L2	102	14.7	2550	4.3	—	63	71	80	90	100	112	132	—	—	15300	17600	27900	33600	9790	281
	3/A 04 L2	117	12.8	2390	3.5	—	—	—	80	90	100	112	132	—	—	16000	18500	29100	35000	10300	281
	3/A 04 L2	129	11.6	2720	3.6	—	63	71	80	90	100	112	132	—	—	16500	19100	30000	36100	10600	281
	3/A 04 L2	149	10.1	2390	2.8	—	63	71	80	90	100	112	132	—	—	17300	20000	31300	37700	11100	281
	3/A 04 L2	162	9.2	2900	3.1	—	63	71	80	90	100	112	132	—	—	17800	20600	32100	38700	11400	281
	3/A 04 L2	174	8.6	2970	2.9	—	63	71	80	90	100	112	—	—	—	18200	21100	32800	39500	11700	281
	3/A 04 L2	205	7.3	3500	2.9	—	63	71	80	90	100	112	—	—	—	19300	22300	34500	41500	12400	281
	3/A 04 L2	226	6.6	3500	2.7	—	63	71	80	90	100	112	—	—	—	19900	23000	35500	42700	12800	281
	3/A 04 L2	250	6.0	3500	2.4	—	63	71	80	90	100	112	—	—	—	20600	23800	36600	44000	13200	281
	3/A 04 L2	283	5.3	2850	1.7	—	63	71	80	90	100	112	—	—	—	21500	24800	38000	45700	13800	281
	3/A 04 L2	317	4.7	2400	1.3	—	63	71	80	90	100	112	—	—	—	22300	25700	39300	47300	14300	281
	3/A 04 L2	349	4.3	2430	1.2	—	63	71	80	90	100	112	—	—	—	23000	26600	40400	48600	14800	281
	3/A 04 L2	386	3.9	2450	1.1	—	63	71	80	90	100	112	—	—	—	23800	27500	41700	50200	15300	281
	3/A 04 L2	469	3.2	2500	0.92	—	63	71	80	90	100	112	—	—	—	25400	29300	44200	53100	16300	281
	3/A 04 L2	520	2.9	2520	0.84	—	63	71	80	90	100	112	—	—	—	26300	30300	45600	54800	16900	281

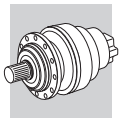

3/A 05 L2

5800 Nm

n_1 min^{-1}		i	n_2 min^{-1}	M_{n2} Nm	P_{n1} kW	Pt kW	P (IEC)								Rn_2 [N] MC/PC	MZ/PZ	HC	HZ	FZ	
1500	**3/A 05L2**	**18.7**	80	1920	17.7	—	—	—	80	90	100	112	132	—	—	8680	10000	16800	20200	5570	293
	3/A 05L2	**22.1**	68	2270	17.7	—	—	—	80	90	100	112	132	—	—	9170	10600	17700	21300	5880	293
	3/A 05L2	**27.7**	54	2850	17.7	—	—	—	80	90	100	112	132	—	—	9890	11400	18900	22800	6350	293
	3/A 05L2	**32.2**	47	3310	17.7	—	—	—	80	90	100	112	132	—	—	10400	12000	19800	23800	6670	293
	3/A 05L2	**39.0**	38	3020	13.3	—	—	—	80	90	100	112	132	—	—	11100	12800	21000	25200	7110	293
	3/A 05L2	**44.0**	34	3310	12.9	—	—	—	80	90	100	112	132	—	—	11500	13300	21700	26100	7400	293
	3/A 05L2	**53.3**	28.2	3040	9.8	—	—	—	80	90	100	112	132	—	—	12300	14200	23000	27700	7890	293
	3/A 05L2	**57.0**	26.3	3310	10.0	—	—	—	80	90	100	112	132	—	—	12600	14500	23500	28300	8070	293
	3/A 05L2	**62.6**	24.0	3220	8.9	—	—	—	80	90	100	112	132	—	—	13000	15000	24200	29100	8330	293
	3/A 05L2	**72.5**	20.7	3310	7.9	—	63	71	80	90	100	112	132	—	—	13600	15700	25200	30400	8740	293
	3/A 05L2	**75.8**	19.8	3060	7.0	—	—	—	80	90	100	112	132	—	—	13800	16000	25600	30800	8870	293
	3/A 05L2	**85.6**	17.5	3520	7.1	—	—	—	80	90	100	112	132	—	—	14400	16600	26500	31900	9240	293
	3/A 05L2	**104**	14.5	3080	5.1	—	—	—	80	90	100	112	132	—	—	15300	17700	28100	33800	9840	293
	3/A 05L2	**121**	12.4	3520	5.0	—	63	71	80	90	100	112	132	—	—	16200	18700	29400	35400	10400	293
	3/A 05L2	**141**	10.7	3600	4.4	—	63	71	80	90	100	112	132	—	—	17000	19600	30800	37000	10900	293
	3/A 05L2	**162**	9.2	2900	3.1	—	63	71	80	90	100	112	132	—	—	17800	20600	32100	38700	11400	293
	3/A 05L2	**175**	8.5	3600	3.5	—	63	71	80	90	100	112	—	—	—	18300	21100	32900	39600	11700	293
	3/A 05L2	**212**	7.1	3100	2.5	—	63	71	80	90	100	112	—	—	—	19500	22500	34800	41900	12500	293
	3/A 05L2	**212**	7.1	3100	2.5	—	63	71	80	90	100	112	—	—	—	19500	22500	34800	41900	12500	293
	3/A 05L2	**241**	6.2	4290	3.1	—	63	71	80	90	100	112	—	—	—	20300	23500	36200	43500	13000	293
	3/A 05L2	**280**	5.4	3600	2.2	—	63	71	80	90	100	112	—	—	—	21400	24700	37800	45500	13700	293
	3/A 05L2	**329**	4.6	3650	1.9	—	63	71	80	90	100	112	—	—	—	22600	26100	39700	47800	14500	293
	3/A 05L2	**398**	3.8	3180	1.4	—	63	71	80	90	100	112	—	—	—	24000	27800	42100	50600	15400	293
	3/A 05L2	**422**	3.6	4400	1.8	—	63	71	80	90	100	112	—	—	—	24500	28300	42800	51500	15700	293
	3/A 05L2	**491**	3.1	3880	1.4	—	63	71	80	90	100	112	—	—	—	25800	29800	44800	53900	16500	293
	3/A 05L2	**594**	2.5	3300	0.96	—	63	71	80	90	100	112	—	—	—	27500	31700	47400	57100	17600	293

3/A 06 L2

10840 Nm

n_1 min^{-1}		i	n_2 min^{-1}	M_{n2} Nm	P_{n1} kW	Pt kW	P (IEC)									Rn_2 [N] MC/PC	MZ/PZ	HC	HZ	FZ	
1500	**3/A 06L2**	**27.7**	54	3320	21	—	—	—	80	90	100	112	132	160	180	12300	14000	30900	36000	9250	305
	3/A 06L2	**32.7**	46	3920	21	—	—	—	80	90	100	112	132	160	180	13000	14700	32500	37900	9780	305
	3/A 06L2	**34.9**	43	3490	17.2	—	—	—	80	90	100	112	132	160	180	13300	15100	33200	38600	9990	305
	3/A 06L2	**41.1**	37	4910	21	—	—	—	80	90	100	112	132	160	180	14000	15900	34800	40500	10500	305
	3/A 06L2	**47.2**	32	3840	14.0	—	—	—	80	90	100	112	132	160	180	14700	16700	36300	42300	11000	305
	3/A 06L2	**51.7**	29.0	5170	17.2	—	—	—	80	90	100	112	132	160	180	15200	17200	37300	43400	11400	305
	3/A 06L2	**55.7**	26.9	4530	14.0	—	—	—	80	90	100	112	132	160	180	15500	17600	38100	44400	11700	305
	3/A 06L2	**60.1**	24.9	6010	17.2	—	—	—	80	90	100	112	132	160	180	15900	18100	39000	45500	12000	305
	3/A 06L2	**69.9**	21.5	5690	14.0	—	—	—	80	90	100	112	132	160	180	16800	19000	40800	47500	12600	305
	3/A 06L2	**81.2**	18.5	6480	13.8	—	—	—	80	90	100	112	132	160	180	17600	20000	42700	49700	13200	305
	3/A 06L2	**88.5**	16.9	6210	12.1	—	—	—	80	90	100	112	132	160	180	18100	20600	43800	51000	13600	305
	3/A 06L2	**98.3**	15.3	5380	9.4	—	—	—	80	90	100	112	132	160	180	18800	21300	45200	52700	14100	305
	3/A 06L2	**112**	13.4	6180	9.8	—	—	—	80	90	100	112	132	160	180	19600	22200	47100	54800	14700	305
	3/A 06L2	**125**	12.0	5440	7.5	—	—	—	80	90	100	112	132	160	180	20300	23000	48600	56500	15300	305
	3/A 06L2	**141**	10.7	7760	9.8	—	—	—	80	90	100	112	132	160	180	21200	24000	50400	58700	15900	305
	3/A 06L2	**164**	9.2	6500	7.1	—	—	—	80	90	100	112	132	160	180	22300	25200	52700	61400	16700	305
	3/A 06L2	**190**	7.9	7760	7.3	—	—	—	80	90	100	112	132	160	180	23400	26500	55100	64200	17600	305
	3/A 06L2	**198**	7.6	5500	4.9	—	—	—	80	90	100	112	132	160	180	23700	26900	55800	65000	17800	305
	3/A 06L2	**221**	6.8	6520	5.3	—	—	—	80	90	100	112	132	160	180	24600	27900	57700	67100	18500	305
	3/A 06L2	**267**	5.6	5500	3.7	—	—	—	80	90	100	112	132	160	180	26200	29700	61000	71100	19700	305
	3/A 06L2	**276**	5.4	7760	5.0	—	63	71	80	90	100	112	132	160	180	26500	30000	61600	71800	19900	305
	3/A 06L2	**321**	4.7	6610	3.7	—	63	71	80	90	100	112	132	160	180	27900	31600	64500	75100	20900	305
	3/A 06L2	**388**	3.9	5640	2.6	—	63	71	80	90	100	112	132	160	180	29700	33600	68300	79500	22300	305
	3/A 06L2	**380**	3.9	6180	2.9	—	63	71	80	90	100	112	132	160	180	29500	33400	67900	79000	22200	305
	3/A 06L2	**435**	3.5	7760	3.2	—	63	71	80	90	100	112	132	160	180	30800	34900	70600	82300	23200	305
	3/A 06L2	**505**	3.0	7150	2.5	—	63	71	80	90	100	112	132	160	180	32400	36700	73900	86100	24400	305
	3/A 06L2	**555**	2.7	7270	2.3	—	63	71	80	90	100	112	132	160	180	33400	37900	76000	88500	25100	305
	3/A 06L2	**611**	2.5	5920	1.7	—	63	71	80	90	100	112	132	160	180	34500	39100	78300	91100	25900	305
	3/A 06L2	**671**	2.2	6020	1.6	—	63	71	80	90	100	112	132	160	180	35600	40400	80500	93700	26800	305

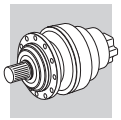

3/A 07 L2

15680 Nm

n_1 min^{-1}		i	n_2 min^{-1}	M_{n2} Nm	P_{n1} kW	Pt kW	P (IEC)									Rn_2 [N] MC/PC	MZ/PZ	HC	HZ	FZ	
1500	**3/A 07L2**	**27.1**	55	6650	42	—	—	—	—	—	—	—	132	160	180	13600	17000	33100	43300	11800	317
	3/A 07L2	**32.3**	46	7940	42	—	—	—	—	—	—	—	132	160	180	14400	18100	34900	45700	12500	317
	3/A 07L2	**41.5**	36	9620	40	—	—	—	—	—	—	—	132	160	180	15700	19600	37600	49200	13600	317
	3/A 07L2	**49.2**	30	8380	29	—	—	—	—	—	—	—	132	160	180	16600	20800	39500	51800	14400	317
	3/A 07L2	**57.3**	26.2	6650	20	—	—	—	80	90	100	112	132	160	180	17400	21900	41400	54200	15200	317
	3/A 07L2	**68.3**	22.0	7940	20	—	—	—	80	90	100	112	132	160	180	18500	23200	43600	57200	16100	317
	3/A 07L2	**87.7**	17.1	10200	20	—	—	—	80	90	100	112	132	160	180	20100	25200	47000	61600	17500	317
	3/A 07L2	**109**	13.8	8860	14.5	—	—	—	80	90	100	112	132	160	180	21600	27100	50100	65700	18800	317
	3/A 07L2	**130**	11.6	11100	15.2	—	—	—	80	90	100	112	132	160	180	22900	28700	52900	69300	19900	317
	3/A 07L2	**140**	10.7	11100	14.1	—	—	—	80	90	100	112	132	160	180	23500	29500	54100	70900	20400	317
	3/A 07L2	**155**	9.7	9000	10.3	—	—	—	80	90	100	112	132	160	180	24300	30500	55800	73100	21100	317
	3/A 07L2	**180**	8.3	10900	10.8	—	—	—	80	90	100	112	132	160	180	25500	32000	58300	76500	22200	317
	3/A 07L2	**198**	7.6	8700	7.8	—	—	—	80	90	100	112	132	160	180	26300	33000	60000	78600	22900	317
	3/A 07L2	**223**	6.7	9000	7.2	—	63	71	80	90	100	112	132	160	180	27400	34400	62200	81500	23800	317
	3/A 07L2	**241**	6.2	9000	6.6	—	63	71	80	90	100	112	132	160	180	28200	35300	63700	83500	24500	317
	3/A 07L2	**282**	5.3	8700	5.5	—	—	—	80	90	100	112	132	160	180	29600	37200	66700	87400	25800	317
	3/A 07L2	**341**	4.4	11500	6.0	—	63	71	80	90	100	112	132	160	180	31600	39700	70700	92600	27500	317
	3/A 07L2	**405**	3.7	9080	4.0	—	63	71	80	90	100	112	132	160	180	33500	42000	74400	97500	29100	317
	3/A 07L2	**439**	3.4	9180	3.7	—	63	71	80	90	100	112	132	160	180	34400	43100	76200	99900	29900	317

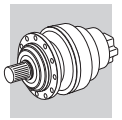

B

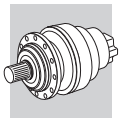

24.7 RATING CHARTS FOR INLINE UNITS 300 L

Reading the rating chart.

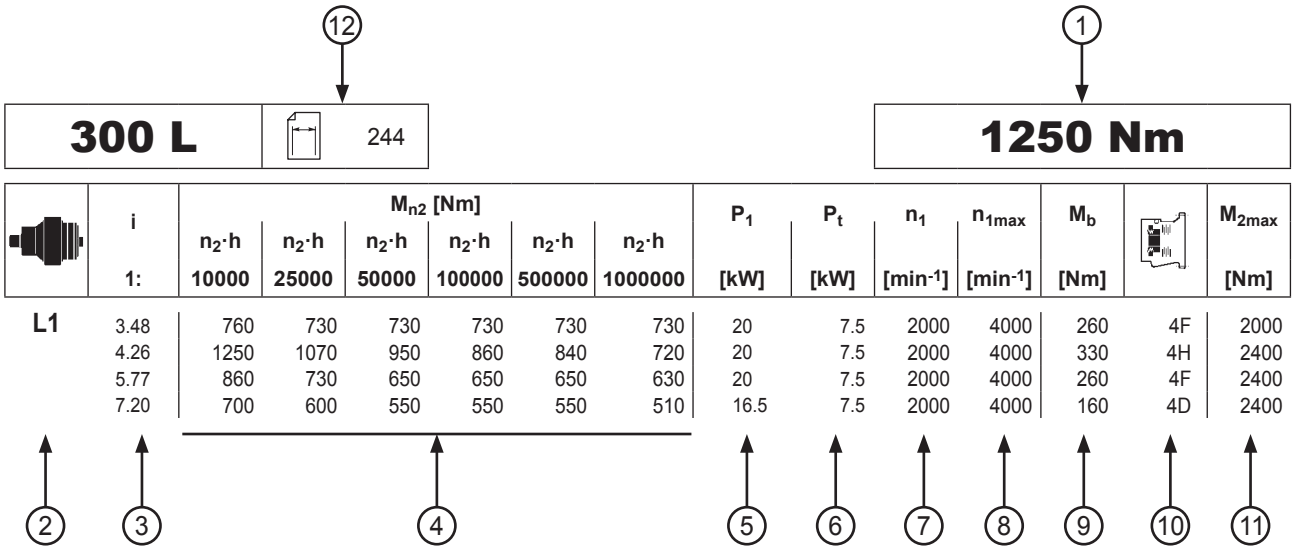

1	Reference torque	**7**	Input angular velocity
2	Number of reduction stages (in-line gear unit)	**8**	Maximum input angular velocity
3	Gear ratio	**9**	Rated brake torque (Hydraulic brake)
4	Gearbox rated output torque based on: - service factor f_S=1 - $n_2 \cdot h$ indicated	**10**	Negative multidisc hydraulic brake
		11	Maximum output torque at gearbox
5	Maximum power transmitted to input shaft	**12**	Page where dimensions can be sorted from
6	Gearbox thermal capacity		

C

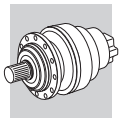

300 L

244

1250 Nm

	i	M_{n2} [Nm]						P_1	P_t	n_1	n_{1max}	M_b		M_{2max}
		$n_2 \cdot h$	$n_2 \cdot h$	$n_2 \cdot h$	$n_2 \cdot h$	$n_2 \cdot h$	$n_2 \cdot h$							
	1:	10000	25000	50000	100000	500000	1000000	[kW]	[kW]	[min-1]	[min-1]	[Nm]		[Nm]
L1	3.48	760	730	730	730	730	730	20	7.5	2000	4000	260	4F	2000
	4.26	1250	1070	950	860	840	720	20	7.5	2000	4000	330	4H	2400
	5.77	860	730	650	650	650	630	20	7.5	2000	4000	260	4F	2400
	7.20	700	600	550	550	550	510	16.5	7.5	2000	4000	160	4D	2400
	9.00	460	390	370	370	370	370	8.9	7.5	2000	4000	160	4D	2400
L2	12.1	760	730	730	730	730	730	11.9	7.5	2000	4000	100	4B	2000
	14.8	1250	1070	950	860	840	720	12.6	7.5	2000	4000	100	4B	2000
	18.2	1250	1070	950	860	840	720	10.4	7.5	2000	4000	100	4B	2400
	20.1	860	730	650	650	650	630	7.2	7.5	2000	4000	100	4B	2000
	24.6	1250	1070	950	860	840	720	7.8	7.5	2000	4000	100	4B	2400
	30.7	1250	1070	950	860	840	720	6.4	7.5	2000	4000	50	4A	2400
	33.3	860	730	650	650	650	630	4.3	7.5	2000	4000	50	4A	2400
	38.4	1250	1070	950	860	840	720	5.2	7.5	2000	4000	50	4A	2400
	41.5	860	730	650	650	650	630	3.5	7.5	2000	4000	50	4A	2400
	51.9	860	730	650	650	650	630	2.9	7.5	2000	4000	50	4A	2400
	64.8	700	600	550	550	550	510	2.0	7.5	2000	4000	50	4A	2400
L3	51.6	1250	1070	950	860	840	720	4.2	7.5	2000	4000	50	4A	2000
	63.2	1250	1070	950	860	840	720	3.5	7.5	2000	4000	50	4A	2400
	69.9	860	730	650	650	650	630	2.4	7.5	2000	4000	50	4A	2000
	77.5	1250	1070	950	860	840	720	3.0	7.5	2000	4000	50	4A	2400
	85.6	1250	1070	950	860	840	720	2.7	7.5	2000	4000	50	4A	2400
	105	1250	1070	950	860	840	720	2.2	7.5	2000	4000	50	4A	2400
	116	860	730	650	650	650	630	1.6	7.5	2000	4000	50	4A	2400
	131	1250	1070	950	860	840	720	1.8	7.5	2000	4000	50	4A	2400
	142	1250	1070	950	860	840	720	1.6	7.5	2000	4000	50	4A	2400
	177	1250	1070	950	860	840	720	1.3	7.5	2000	4000	50	4A	2400
	192	860	730	650	650	650	630	1.0	7.5	2000	4000	50	4A	2400
	221	1250	1070	950	860	840	720	1.0	7.5	2000	4000	50	4A	2400
	240	860	730	650	650	650	630	0.82	7.5	2000	4000	50	4A	2400
	299	860	730	650	650	650	630	0.66	7.5	2000	4000	50	4A	2400
	374	860	730	650	650	650	630	0.53	7.5	2000	4000	50	4A	2400
L4	330	1250	1070	950	860	840	720	0.72	6	2000	4000	50	4A	2400
	403	860	730	650	650	650	630	0.50	6	2000	4000	50	4A	2400
	447	1250	1070	950	860	840	720	0.53	6	2000	4000	50	4A	2400
	494	1250	1070	950	860	840	720	0.48	6	2000	4000	50	4A	2400
	558	1250	1070	950	860	840	720	0.42	6	2000	4000	50	4A	2400
	616	1250	1070	950	860	840	720	0.38	6	2000	4000	50	4A	2400
	755	1250	1070	950	860	840	720	0.31	6	2000	4000	50	4A	2400
	819	1250	1070	950	860	840	720	0.29	6	2000	4000	50	4A	2400
	942	1250	1070	950	860	840	720	0.25	6	2000	4000	50	4A	2400
	1022	1250	1070	950	860	840	720	0.23	6	2000	4000	50	4A	2400
	1108	860	730	650	650	650	630	0.18	6	2000	4000	50	4A	2400
	1275	1250	1070	950	860	840	720	0.19	6	2000	4000	50	4A	2400
	1383	860	730	650	650	650	630	0.15	6	2000	4000	50	4A	2400
	1591	1250	1070	950	860	840	720	0.15	6	2000	4000	50	4A	2400
	1725	860	730	650	650	650	630	0.12	6	2000	4000	50	4A	2400
	2153	860	730	650	650	650	630	0.09	6	2000	4000	50	4A	2400
	2692	1000	1000	890	850	760	630	0.09	6	2000	4000	50	4A	2400

301 L

254

2460 Nm

	i	M_{n2} [Nm]						P_1	P_t	n_1	n_{1max}	M_b		M_{2max}
		$n_2 \cdot h$	$n_2 \cdot h$	$n_2 \cdot h$	$n_2 \cdot h$	$n_2 \cdot h$	$n_2 \cdot h$							
	1:	10000	25000	50000	100000	500000	1000000	[kW]	[kW]	[min-1]	[min-1]	[Nm]		[Nm]
L1	3.48	1490	1430	1430	1430	1430	1300	30	7.5	2000	4000	440	4L	3400
	4.26	2460	2140	1890	1730	1580	1280	30	7.5	2000	4000	440	4L	3400
	5.77	1720	1460	1300	1300	1300	1240	30	7.5	2000	4000	400	4K	3400
	7.20	1150	1150	1150	1150	1150	940	30	7.5	2000	4000	260	4F	3400

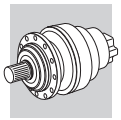

301 L

254

2460 Nm

	i	M_{n2} [Nm]						P_1	P_t	n_1	n_{1max}	M_b		M_{2max}
		$n_2 \cdot h$	$n_2 \cdot h$	$n_2 \cdot h$	$n_2 \cdot h$	$n_2 \cdot h$	$n_2 \cdot h$							
	1:	10000	25000	50000	100000	500000	1000000	[kW]	[kW]	[min^{-1}]	[min^{-1}]	[Nm]		[Nm]
L1	9.00	920	780	730	730	730	730	15.8	7.5	2000	4000	260	4F	3400
L2	12.1	1490	1430	1430	1430	1430	1300	23.9	7.5	2000	4000	160	4D	3400
	14.8	2460	2140	1890	1730	1580	1280	25.0	7.5	2000	4000	160	4D	3400
	18.2	2460	2140	1890	1730	1580	1280	20.7	7.5	2000	4000	160	4D	3400
	20.1	1720	1460	1300	1300	1300	1240	14.4	7.5	2000	4000	160	4D	3400
	24.6	2460	2140	1890	1730	1580	1280	15.6	7.5	2000	4000	160	4D	3400
	30.7	2000	2000	1830	1730	1580	1280	12.6	7.5	2000	4000	100	4B	3400
	33.3	1720	1460	1300	1300	1300	1240	8.7	7.5	2000	4000	100	4B	3400
	38.4	1600	1570	1570	1570	1530	1280	10.1	7.5	2000	4000	100	4B	3400
	41.5	1720	1460	1300	1300	1300	1240	7.0	7.5	2000	4000	100	4B	3400
	51.9	1720	1460	1300	1300	1300	1240	5.9	7.5	2000	4000	50	4A	3400
	64.8	1150	1150	1150	1150	1150	940	4.0	7.5	2000	4000	50	4A	3400
L3	51.6	2460	2140	1890	1730	1580	1280	8.3	7.5	2000	4000	50	4A	3400
	63.2	2460	2140	1890	1730	1580	1280	7.0	7.5	2000	4000	50	4A	3400
	69.9	1720	1460	1300	1300	1300	1240	4.7	7.5	2000	4000	50	4A	3400
	77.5	2460	2140	1890	1730	1580	1280	5.9	7.5	2000	4000	50	4A	3400
	85.6	2460	2140	1890	1730	1580	1280	5.4	7.5	2000	4000	50	4A	3400
	105	2460	2140	1890	1730	1580	1280	4.4	7.5	2000	4000	50	4A	3400
	116	1720	1460	1300	1300	1300	1240	3.1	7.5	2000	4000	50	4A	3400
	131	2460	2140	1890	1730	1580	1280	3.5	7.5	2000	4000	50	4A	3400
	142	2460	2140	1890	1730	1580	1280	3.2	7.5	2000	4000	50	4A	3400
	177	2460	2140	1890	1730	1580	1280	2.6	7.5	2000	4000	50	4A	3400
	192	1720	1460	1300	1300	1300	1240	2.0	7.5	2000	4000	50	4A	3400
	221	2000	2000	1830	1730	1580	1280	2.1	7.5	2000	4000	50	4A	3400
	240	1720	1460	1300	1300	1300	1240	1.6	7.5	2000	4000	50	4A	3400
	299	1720	1460	1300	1300	1300	1240	1.3	7.5	2000	4000	50	4A	3400
	374	1720	1460	1300	1300	1300	1240	1.0	7.5	2000	4000	50	4A	3400
L4	330	2460	2140	1890	1730	1580	1280	1.4	6	2000	4000	50	4A	3400
	403	1720	1460	1300	1300	1300	1240	1.00	6	2000	4000	50	4A	3400
	447	2460	2140	1890	1730	1580	1280	1.06	6	2000	4000	50	4A	3400
	494	2460	2140	1890	1730	1580	1280	0.96	6	2000	4000	50	4A	3400
	558	2460	2140	1890	1730	1580	1280	0.85	6	2000	4000	50	4A	3400
	616	2460	2140	1890	1730	1580	1280	0.77	6	2000	4000	50	4A	3400
	755	2460	2140	1890	1730	1580	1280	0.63	6	2000	4000	50	4A	3400
	819	2460	2140	1890	1730	1580	1280	0.58	6	2000	4000	50	4A	3400
	942	2460	2140	1890	1730	1580	1280	0.50	6	2000	4000	50	4A	3400
	1022	2460	2140	1890	1730	1580	1280	0.46	6	2000	4000	50	4A	3400
	1108	1720	1460	1300	1300	1300	1240	0.36	6	2000	4000	50	4A	3400
	1275	2460	2140	1890	1730	1580	1280	0.37	6	2000	4000	50	4A	3400
	1383	1720	1460	1300	1300	1300	1240	0.29	6	2000	4000	50	4A	3400
	1591	2000	2000	1830	1730	1580	1280	0.30	6	2000	4000	50	4A	3400
	1725	1720	1460	1300	1300	1300	1240	0.23	6	2000	4000	50	4A	3400
	2153	1720	1460	1300	1300	1300	1240	0.19	6	2000	4000	50	4A	3400
	2692	1720	1460	1300	1300	1300	1240	0.15	6	2000	4000	50	4A	3400

303 L

264

2970 Nm

	i	M_{n2} [Nm]						P_1	P_t	n_1	n_{1max}	M_b		M_{2max}
		$n_2 \cdot h$	$n_2 \cdot h$	$n_2 \cdot h$	$n_2 \cdot h$	$n_2 \cdot h$	$n_2 \cdot h$							
	1:	10000	25000	50000	100000	500000	1000000	[kW]	[kW]	[min^{-1}]	[min^{-1}]	[Nm]		[Nm]
L1	3.60	2410	2310	2310	2310	2310	2120	40	11	1800	3800	800	5G	5200
	4.25	2970	2810	2810	2650	2570	2090	40	11	1800	3800	800	5G	5200
	5.33	2850	2520	2230	2200	2140	2030	40	11	1800	3800	630	5E	5200
	6.20	2440	2080	1840	1820	1820	1820	40	11	1800	3800	500	5C	5200
	7.50	2000	1750	1650	1650	1650	1500	40	11	1800	3800	400	5B	5200
	9.67	1050	900	860	860	860	860	17.3	11	1800	3800	400	5B	5200
L2	12.5	2410	2310	2310	2310	2130	1730	20	9	2000	4000	260	4F	5200

C

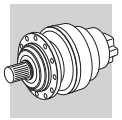

303 L

264

2970 Nm

	i	M_{n2} [Nm]						P_1	P_t	n_1	n_{1max}	M_b		M_{2max}
		$n_2 \cdot h$	$n_2 \cdot h$	$n_2 \cdot h$	$n_2 \cdot h$	$n_2 \cdot h$	$n_2 \cdot h$							
	1:	10000	25000	50000	100000	500000	1000000	[kW]	[kW]	[min-1]	[min-1]	[Nm]		[Nm]
L2	15.3	2410	2310	2310	2310	2100	1700	20	9	2000	4000	260	4F	5200
	18.1	2970	2810	2810	2650	2350	1910	20	9	2000	4000	260	4F	5200
	20.8	2410	2210	2210	2210	2030	1650	20	9	2000	4000	160	4D	5200
	22.7	2850	2520	2230	2200	2140	2030	20	9	2000	4000	160	4D	5200
	24.5	2770	2700	2650	2620	2280	1850	20	9	2000	4000	160	4D	5200
	26.4	2440	2080	1840	1820	1820	1820	15.2	9	2000	4000	160	4D	5200
	30.8	2850	2520	2230	2200	2140	2030	15.9	9	2000	4000	160	4D	5200
	35.8	2440	2080	1840	1820	1820	1820	11.2	9	2000	4000	100	4B	5200
	38.4	2850	2450	2230	2200	2140	2030	12.8	9	2000	4000	100	4B	5200
	44.6	2440	2080	1840	1820	1820	1820	9.2	9	2000	4000	100	4B	5200
	55.8	2300	2080	1840	1820	1820	1820	7.6	9	2000	4000	100	4B	5200
L3	53.4	2410	2310	2310	2310	2100	1700	9.3	7.5	2000	4000	100	4B	5200
	63.1	2970	2810	2810	2650	2390	1940	9.8	7.5	2000	4000	100	4B	5200
	72.3	2410	2310	2310	2310	2130	1730	7.0	7.5	2000	4000	50	4A	5200
	77.2	2970	2810	2810	2650	2350	1910	8.2	7.5	2000	4000	50	4A	5200
	90.2	2410	2310	2310	2310	2130	1730	5.6	7.5	2000	4000	50	4A	5200
	105	2970	2810	2810	2650	2350	1910	6.2	7.5	2000	4000	50	4A	5200
	113	2440	2080	1840	1820	1820	1820	4.4	7.5	2000	4000	50	4A	5200
	124	2440	2080	1840	1820	1820	1820	4.0	7.5	2000	4000	50	4A	5200
	141	2770	2700	2650	2620	2280	1850	4.4	7.5	2000	4000	50	4A	5200
	152	2440	2080	1840	1820	1820	1820	3.4	7.5	2000	4000	50	4A	5200
	164	2850	2520	2230	2200	2140	2030	3.9	7.5	2000	4000	50	4A	5200
	178	2850	2520	2230	2200	2140	2030	3.6	7.5	2000	4000	50	4A	5200
	190	2440	2080	1840	1820	1820	1820	2.8	7.5	2000	4000	50	4A	5200
	220	2250	2200	2250	2250	1830	1800	2.3	7.5	2000	4000	50	4A	5200
	258	2440	2080	1840	1820	1820	1820	2.0	7.5	2000	4000	50	4A	5200
	276	2850	2450	2230	2200	2140	2030	2.4	7.5	2000	4000	50	4A	5200
	321	2440	2080	1840	1820	1820	1820	1.6	7.5	2000	4000	50	4A	5200
	389	2000	1750	1650	1650	1650	1500	1.2	7.5	2000	4000	50	4A	5200
	402	2440	2080	1840	1820	1820	1820	1.3	7.5	2000	4000	50	4A	5200
L4	413	2850	2520	2230	2200	2140	2030	1.6	6	2000	4000	50	4A	5200
	446	2970	2810	2810	2650	2350	1910	1.5	6	2000	4000	50	4A	5200
	492	2770	2700	2650	2620	2280	1850	1.3	6	2000	4000	50	4A	5200
	556	2970	2810	2810	2650	2350	1910	1.2	6	2000	4000	50	4A	5200
	649	2410	2310	2310	2310	2130	1730	0.84	6	2000	4000	50	4A	5200
	718	2440	2080	1840	1820	1820	1820	0.76	6	2000	4000	50	4A	5200
	816	2770	2700	2650	2620	2280	1850	0.80	6	2000	4000	50	4A	5200
	896	2440	2080	1840	1820	1820	1820	0.61	6	2000	4000	50	4A	5200
	1018	2770	2700	2650	2620	2280	1850	0.64	6	2000	4000	50	4A	5200
	1098	2440	2080	1840	1820	1820	1820	0.50	6	2000	4000	50	4A	5200
	1278	2850	2520	2230	2200	2140	2030	0.53	6	2000	4000	50	4A	5200
	1370	2440	2080	1840	1820	1820	1820	0.40	6	2000	4000	50	4A	5200
	1586	2250	2250	2250	2250	1830	1800	0.34	6	2000	4000	50	4A	5200
	1854	2440	2080	1840	1820	1820	1820	0.29	6	2000	4000	50	4A	5200
	1991	2850	2450	2230	2200	2140	2030	0.34	6	2000	4000	50	4A	5200
	2243	2000	1750	1650	1650	1650	1500	0.21	6	2000	4000	50	4A	5200
	2799	2000	1750	1650	1650	1650	1500	0.17	6	2000	4000	50	4A	5200

304 L

276

3960 Nm

	i	M_{n2} [Nm]						P_1	P_t	n_1	n_{1max}	M_b		M_{2max}
		$n_2 \cdot h$	$n_2 \cdot h$	$n_2 \cdot h$	$n_2 \cdot h$	$n_2 \cdot h$	$n_2 \cdot h$							
	1:	10000	25000	50000	100000	500000	1000000	[kW]	[kW]	[min-1]	[min-1]	[Nm]		[Nm]
L1	3.60	3710	3520	3500	3440	3120	2830	50	12	1800	3800	800	5G	7300
	4.25	3960	3750	3690	3540	3430	2780	50	12	1800	3800	800	5G	7300
	5.33	3740	3190	2850	2850	2850	2710	50	12	1800	3800	630	5E	7300
	6.57	3000	2560	2390	2390	2390	2390	50	12	1800	3800	500	5C	7300
L2	12.5	3710	3520	3500	3440	3120	2830	30	9	2000	4000	260	4F	7300

C

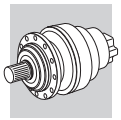

304 L

276

3960 Nm

	i	M_{n2} [Nm]						P_1	P_t	n_1	n_{1max}	M_b		M_{2max}
		$n_2 \cdot h$	$n_2 \cdot h$	$n_2 \cdot h$	$n_2 \cdot h$	$n_2 \cdot h$	$n_2 \cdot h$							
	1:	10000	25000	50000	100000	500000	1000000	[kW]	[kW]	[min^{-1}]	[min^{-1}]	[Nm]		[Nm]
L2	15.3	3710	3520	3500	3440	3120	2830	30	9	2000	4000	260	4F	7300
	18.1	3960	3750	3690	3540	3430	2780	30	9	2000	4000	260	4F	7300
	20.8	3710	3520	3500	3440	3120	2830	30	9	2000	4000	160	4D	7300
	22.7	3740	3190	2850	2850	2850	2710	28	9	2000	4000	160	4D	7300
	24.5	3960	3750	3690	3540	3430	2780	30	9	2000	4000	160	4D	7300
	30.8	3740	3190	2850	2850	2850	2710	20	9	2000	4000	160	4D	7300
	38.4	3740	3190	2850	2850	2850	2710	16.2	9	2000	4000	160	4D	7300
	47.3	3000	2560	2390	2390	2390	2390	10.9	9	2000	4000	100	4B	7300
	59.1	3000	2560	2390	2390	2390	2390	8.9	9	2000	4000	100	4B	7300
L3	43.6	3710	3520	3500	3440	3120	2830	18.4	7.5	2000	4000	50	4A	7300
	53.4	3710	3520	3500	3440	3120	2830	15.1	7.5	2000	4000	50	4A	7300
	63.1	3960	3750	3690	3540	3430	2780	13.4	7.5	2000	4000	50	4A	7300
	72.3	3710	3520	3500	3440	3120	2830	11.2	7.5	2000	4000	50	4A	7300
	77.2	3960	3750	3690	3540	3430	2780	11.0	7.5	2000	4000	50	4A	7300
	90.2	3710	3520	3500	3440	3080	2830	9.0	7.5	2000	4000	50	4A	7300
	105	3960	3750	3690	3540	3430	2780	8.4	7.5	2000	4000	50	4A	7300
	111	3710	3520	3500	3440	3120	2830	7.5	7.5	2000	4000	50	4A	7300
	130	3960	3750	3690	3540	3430	2780	6.8	7.5	2000	4000	50	4A	7300
	141	3960	3750	3690	3540	3430	2780	6.3	7.5	2000	4000	50	4A	7300
	150	3710	3520	3500	3440	3120	2830	5.6	7.5	2000	4000	50	4A	7300
	165	3000	2560	2390	2390	2390	2390	3.8	7.5	2000	4000	50	4A	7300
	178	3740	3190	2850	2850	2850	2710	4.5	7.5	2000	4000	50	4A	7300
	202	3000	2560	2390	2390	2390	2390	3.1	7.5	2000	4000	50	4A	7300
	220	3960	3710	3660	3540	3430	2780	4.1	7.5	2000	4000	50	4A	7300
	273	3000	2560	2390	2390	2390	2390	2.3	7.5	2000	4000	50	4A	7300
	341	3000	2560	2390	2390	2390	2390	1.8	7.5	2000	4000	50	4A	7300
	426	3000	2560	2390	2390	2390	2390	1.5	7.5	2000	4000	50	4A	7300
L4	413	3740	3190	2850	2850	2850	2710	2.0	6	2000	4000	50	4A	7300
	446	3960	3750	3690	3540	3430	2780	2.1	6	2000	4000	50	4A	7300
	492	3960	3750	3690	3540	3430	2780	1.9	6	2000	4000	50	4A	7300
	556	3960	3750	3690	3540	3430	2780	1.7	6	2000	4000	50	4A	7300
	649	3710	3520	3500	3440	3120	2830	1.4	6	2000	4000	50	4A	7300
	702	3000	2560	2390	2390	2390	2390	0.93	6	2000	4000	50	4A	7300
	816	3960	3750	3690	3540	3430	2780	1.1	6	2000	4000	50	4A	7300
	1018	3960	3750	3690	3540	3430	2780	0.92	6	2000	4000	50	4A	7300
	1164	3000	2560	2390	2390	2390	2390	0.56	6	2000	4000	50	4A	7300
	1271	3960	3750	3690	3540	3430	2780	0.74	6	2000	4000	50	4A	7300
	1344	3710	3520	3500	3440	3080	2830	0.65	6	2000	4000	50	4A	7300
	1586	3960	3710	3660	3540	3430	2780	0.59	6	2000	4000	50	4A	7300
	1815	3000	2560	2390	2390	2390	2390	0.36	6	2000	4000	50	4A	7300
	1991	3740	3190	2850	2850	2850	2710	0.42	6	2000	4000	50	4A	7300
	2269	3000	2560	2390	2390	2390	2390	0.29	6	2000	4000	50	4A	7300
	2453	3000	2560	2390	2390	2390	2390	0.27	6	2000	4000	50	4A	7300

305 L

288

5800 Nm

	i	M_{n2} [Nm]						P_1	P_t	n_1	n_{1max}	M_b		M_{2max}
		$n_2 \cdot h$	$n_2 \cdot h$	$n_2 \cdot h$	$n_2 \cdot h$	$n_2 \cdot h$	$n_2 \cdot h$							
	1:	10000	25000	50000	100000	500000	1000000	[kW]	[kW]	[min^{-1}]	[min^{-1}]	[Nm]		[Nm]
L1	3.60	4700	4490	4490	4490	4480	3640	60	13	1800	3800	1000	5K	8800
	4.25	5800	5500	5480	5300	4410	3580	60	13	1800	3800	1000	5K	8800
	5.33	5600	5040	4470	4400	4280	3490	60	13	1800	3800	1000	5K	8800
	6.20	4690	4000	3600	3600	3550	3460	60	13	1800	3800	800	5G	8800
	7.50	3800	3300	3100	3100	3000	2790	60	13	1800	3800	630	5E	8800
L2	12.5	4700	4490	4490	4490	3800	3090	30	9	2000	4000	400	4K	8800
	15.3	4700	4490	4490	4490	3750	3040	30	9	2000	4000	330	4H	8800
	18.1	5800	5500	5480	5300	4210	3420	30	9	2000	4000	400	4K	8800
	20.8	4700	4450	4430	4430	3630	2950	30	9	2000	4000	260	4F	8800

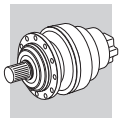

305 L

288

5800 Nm

	i	M_{n2} [Nm]						P_1	P_t	n_1	n_{1max}	M_b		M_{2max}
		$n_2 \cdot h$	$n_2 \cdot h$	$n_2 \cdot h$	$n_2 \cdot h$	$n_2 \cdot h$	$n_2 \cdot h$							
	1:	10000	25000	50000	100000	500000	1000000	[kW]	[kW]	[min-1]	[min-1]	[Nm]		[Nm]
L2	22.7	5600	5040	4470	4400	4280	3490	30	9	2000	4000	330	4H	8800
	24.5	5530	5400	5300	5230	4070	3310	30	9	2000	4000	330	4H	8800
	26.4	4690	4000	3600	3600	3550	3460	30	9	2000	4000	260	4F	8800
	30.8	5600	5040	4470	4400	4280	3490	30	9	2000	4000	260	4F	8800
	35.8	4690	4000	3600	3600	3550	3460	22.4	9	2000	4000	160	4D	8800
	38.4	5600	4900	4470	4400	4280	3490	25.5	9	2000	4000	160	4D	8800
	44.6	4690	4000	3600	3600	3550	3460	18.3	9	2000	4000	160	4D	8800
	55.8	4430	4000	3600	3600	3500	3460	15.2	9	2000	4000	160	4D	8800
L3	53.4	4700	4490	4490	4490	3750	3040	18.8	7.5	2000	4000	100	4B	8800
	63.1	5800	5480	5480	5300	4270	3470	19.4	7.5	2000	4000	160	4D	8800
	72.3	4700	4490	4490	4490	3800	3090	14.1	7.5	2000	4000	100	4B	8800
	77.2	5800	5500	5480	5300	4210	3420	16.3	7.5	2000	4000	100	4B	8800
	90.2	4700	4490	4490	4490	3800	3090	11.4	7.5	2000	4000	100	4B	8800
	105	5800	5500	5480	5300	4210	3420	12.3	7.5	2000	4000	100	4B	8800
	113	4690	4000	3600	3600	3550	3460	8.7	7.5	2000	4000	100	4B	8800
	124	4690	4000	3600	3600	3550	3460	8.0	7.5	2000	4000	50	4A	8800
	141	5530	5350	5300	5230	4070	3310	8.9	7.5	2000	4000	100	4B	8800
	152	4690	4000	3600	3600	3550	3460	6.7	7.5	2000	4000	50	4A	8800
	164	5600	5040	4470	4400	4280	3490	7.7	7.5	2000	4000	50	4A	8800
	178	5600	5040	4470	4400	4280	3490	7.2	7.5	2000	4000	50	4A	8800
	190	4690	4000	3600	3600	3550	3460	5.5	7.5	2000	4000	50	4A	8800
	220	4750	4750	4750	4750	3660	3210	4.9	7.5	2000	4000	50	4A	8800
	258	4690	4000	3600	3600	3550	3460	4.1	7.5	2000	4000	50	4A	8800
	276	5600	4900	4470	4400	4280	3490	4.6	7.5	2000	4000	50	4A	8800
	321	4690	4000	3600	3600	3550	3460	3.3	7.5	2000	4000	50	4A	8800
	389	3800	3300	3100	3100	3000	2790	2.2	7.5	2000	4000	50	4A	8800
	402	4690	4000	3600	3600	3550	3460	2.6	6	2000	4000	50	4A	8800
L4	413	5600	5040	4470	4400	4280	3490	3.2	6	2000	4000	50	4A	8800
	446	5800	5500	5480	5300	4210	3420	3.1	6	2000	4000	50	4A	8800
	492	5530	5350	5300	5230	4070	3310	2.6	6	2000	4000	50	4A	8800
	556	5800	5500	5480	5300	4210	3420	2.5	6	2000	4000	50	4A	8800
	649	4700	4490	4490	4490	3800	3090	1.7	6	2000	4000	50	4A	8800
	718	4690	4000	3600	3600	3550	3460	1.5	6	2000	4000	50	4A	8800
	816	5530	5350	5300	5230	4070	3310	1.6	6	2000	4000	50	4A	8800
	896	4690	4000	3600	3600	3550	3460	1.2	6	2000	4000	50	4A	8800
	1018	5530	5350	5300	5230	4070	3310	1.3	6	2000	4000	50	4A	8800
	1098	4690	4000	3600	3600	3550	3460	0.99	6	2000	4000	50	4A	8800
	1278	5600	5040	4470	4400	4280	3490	1.0	6	2000	4000	50	4A	8800
	1370	4690	4000	3600	3600	3550	3460	0.79	6	2000	4000	50	4A	8800
	1586	4750	4750	4750	4750	3660	3210	0.71	6	2000	4000	50	4A	8800
	1854	4690	4000	3600	3600	3550	3460	0.59	6	2000	4000	50	4A	8800
	1991	5600	4900	4470	4400	4280	3490	0.67	6	2000	4000	50	4A	8800
	2243	3800	3300	3100	3100	3000	2790	0.40	6	2000	4000	50	4A	8800
	2799	3800	3300	3100	3100	3000	2790	0.32	6	2000	4000	50	4A	8800

306 L

300

10840 Nm

	i	M_{n2} [Nm]						P_1	P_t	n_1	n_{1max}	M_b		M_{2max}
		$n_2 \cdot h$	$n_2 \cdot h$	$n_2 \cdot h$	$n_2 \cdot h$	$n_2 \cdot h$	$n_2 \cdot h$							
	1:	10000	25000	50000	100000	500000	1000000	[kW]	[kW]	[min-1]	[min-1]	[Nm]		[Nm]
L1	3.60	10840	10380	10380	10380	7100	5770	75	18	1600	3000	2600	6K	14900
	4.25	10420	9850	9850	9600	6990	5680	75	18	1600	3000	2600	6K	14900
	5.33	10080	9350	8300	7950	6810	5530	75	18	1600	3000	2100	6G	14900
	6.20	8630	7370	6530	6500	6460	5480	75	18	1600	3000	1500	6E	14900
	7.50	7000	5900	5500	5500	5040	5040	75	18	1600	3000	1100	6C	14900
L2	13.0	8020	8020	8020	8020	6210	5040	40	13	1800	3800	800	5G	14900
	15.3	9770	9340	9340	9300	6110	4960	40	13	1800	3800	800	5G	14900
	18.1	10420	9850	9850	9600	6860	5570	40	13	1800	3800	630	5E	14900

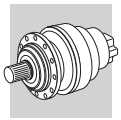

306 L

300

10840 Nm

	i	M_{n2} [Nm]						P_1	P_t	n_1	n_{1max}	M_b		M_{2max}
		$n_2 \cdot h$	$n_2 \cdot h$	$n_2 \cdot h$	$n_2 \cdot h$	$n_2 \cdot h$	$n_2 \cdot h$							
	1:	10000	25000	50000	100000	500000	1000000	[kW]	[kW]	[min^{-1}]	[min^{-1}]	[Nm]		[Nm]
L2	22.7	9560	9100	9100	9100	6680	5430	40	13	1800	3800	500	5C	14900
	26.4	7890	7590	7590	7590	6620	5380	40	13	1800	3800	400	5B	14900
	28.4	10080	9350	8300	7950	6810	5530	40	13	1800	3800	400	5B	14900
	33.1	9540	9350	8300	7950	6810	5530	40	13	1800	3800	400	5B	14900
	38.4	8630	7370	6530	6500	6460	5480	34	13	1800	3800	400	5B	14900
	46.5	8500	7370	6530	6500	6460	5480	29	13	1800	3800	400	5B	14900
	56.3	7000	5900	5500	5500	5040	5040	21	13	1800	3800	400	5B	14900
	72.5	6400	5900	5500	5500	5040	5040	16.3	13	1800	3800	400	5B	14900
L3	53.2	9770	9340	9340	9300	6110	4960	20	7.5	2000	4000	260	4F	14900
	65.2	9770	9340	9340	9300	6110	4960	20	7.5	2000	4000	160	4D	14900
	77.0	10420	9850	9850	9600	6860	5570	20	7.5	2000	4000	160	4D	14900
	81.9	8320	7700	7700	7530	5950	4830	20	7.5	2000	4000	160	4D	14900
	88.3	9450	9450	9450	9450	6970	5660	20	7.5	2000	4000	160	4D	14900
	104	10420	9850	9850	9600	6860	5570	20	7.5	2000	4000	160	4D	14900
	112	7890	7590	7590	7590	6620	5380	15.2	7.5	2000	4000	160	4D	14900
	121	10080	9350	8300	7950	6810	5530	17.2	7.5	2000	4000	100	4B	14900
	141	9540	9350	8300	7950	6810	5530	14.8	7.5	2000	4000	100	4B	14900
	152	7890	7590	7590	7590	6620	5380	11.3	7.5	2000	4000	100	4B	14900
	190	8630	7370	6530	6500	6460	5480	10.2	7.5	2000	4000	100	4B	14900
	205	10080	9350	8300	7950	6810	5530	10.6	7.5	2000	4000	100	4B	14900
	222	8630	7370	6530	6500	6460	5480	8.8	7.5	2000	4000	50	4A	14900
	238	9540	9350	8300	7950	6810	5530	9.0	7.5	2000	4000	50	4A	14900
	268	7000	5900	5500	5500	5040	5040	6.0	7.5	2000	4000	50	4A	14900
	288	7000	5900	5500	5500	5040	5040	5.6	7.5	2000	4000	50	4A	14900
	325	7000	5900	5500	5500	5040	5040	4.9	7.5	2000	4000	50	4A	14900
	405	7000	5900	5500	5500	5040	5040	4.0	7.5	2000	4000	50	4A	14900
L4	391	8630	7370	6530	6500	6460	5480	5.1	6	2000	4000	50	4A	14900
	444	10420	9850	9850	9600	6860	5570	5.3	6	2000	4000	50	4A	14900
	509	9450	9450	9450	9450	6970	5660	4.1	6	2000	4000	50	4A	14900
	589	10080	9350	8300	7950	6810	5530	3.8	6	2000	4000	50	4A	14900
	636	9450	9450	9450	9450	6970	5660	3.3	6	2000	4000	50	4A	14900
	700	10080	9350	8300	7950	6810	5530	3.2	6	2000	4000	50	4A	14900
	809	7890	7590	7590	7590	6620	5380	2.2	6	2000	4000	50	4A	14900
	877	7890	7590	7590	7590	6620	5380	2.0	6	2000	4000	50	4A	14900
	1015	9540	9350	8300	7950	6810	5530	2.2	6	2000	4000	50	4A	14900
	1095	7890	7590	7590	7590	6620	5380	1.6	6	2000	4000	50	4A	14900
	1279	8630	7370	6530	6500	6460	5480	1.6	6	2000	4000	50	4A	14900
	1475	10080	9350	8300	7950	6810	5530	1.5	6	2000	4000	50	4A	14900
	1597	8630	7370	6530	6500	6460	5480	1.3	6	2000	4000	50	4A	14900
	1843	10080	9350	8300	7950	6810	5530	1.2	6	2000	4000	50	4A	14900
	2074	7000	5900	5500	5500	5040	5040	0.80	6	2000	4000	50	4A	14900
	2337	7000	5900	5500	5500	5040	5040	0.71	6	2000	4000	50	4A	14900
	2916	7000	5900	5500	5500	5040	5040	0.57	6	2000	4000	50	4A	14900

307 L

312

15680 Nm

	i	M_{n2} [Nm]						P_1	P_t	n_1	n_{1max}	M_b		M_{2max}
		$n_2 \cdot h$	$n_2 \cdot h$	$n_2 \cdot h$	$n_2 \cdot h$	$n_2 \cdot h$	$n_2 \cdot h$							
	1:	10000	25000	50000	100000	500000	1000000	[kW]	[kW]	[min^{-1}]	[min^{-1}]	[Nm]		[Nm]
L1	3.43	9000	9000	9000	9000	8300	7960	115	22	1500	2500	3200	6L	18600
	4.09	15680	14890	14890	13510	9560	7770	115	22	1500	2500	3200	6L	21000
	5.25	14840	12700	11300	10790	9340	7590	115	22	1500	2500	3200	6L	21000
	6.23	11000	9600	8700	8700	8240	7490	115	22	1500	2500	2100	6G	21000
L2	12.3	9000	9000	9000	9000	8300	7960	60	18	1800	3800	1000	5K	18600
	14.7	15680	14890	14890	13510	9560	7770	60	18	1800	3800	800	5G	21000
	17.4	15680	14890	14890	13510	9560	7770	60	18	1800	3800	1000	5K	21000
	21.8	15680	14890	14890	13510	9560	7770	60	18	1800	3800	800	5G	21000
	25.4	14670	14010	14010	13510	9560	7770	60	18	1800	3800	630	5E	21000

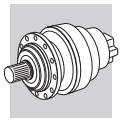

307 L

312

15680 Nm

	i	M_{n2} [Nm]						P_1	P_t	n_1	n_{1max}	M_b		M_{2max}
		$n_2 \cdot h$	$n_2 \cdot h$	$n_2 \cdot h$	$n_2 \cdot h$	$n_2 \cdot h$	$n_2 \cdot h$							
	1:	10000	25000	50000	100000	500000	1000000	[kW]	[kW]	[min-1]	[min-1]	[Nm]		[Nm]
L2	28.0	14840	12700	11300	10790	9340	7590	60	18	1800	3800	500	5C	21000
	30.7	12300	12300	12300	12300	9560	7770	60	18	1800	3800	500	5C	21000
	32.6	14840	12700	11300	10790	9340	7590	60	18	1800	3800	500	5C	21000
	38.6	11000	9600	8700	8700	8240	7490	46	18	1800	3800	400	5B	21000
	46.7	11000	9600	8700	8700	8240	7490	39	18	1800	3800	400	5B	21000
L3	51.3	15680	14890	14890	13510	9560	7770	30	11	2000	4000	330	4H	21000
	60.5	15680	14890	14890	13510	9560	7770	30	11	2000	4000	330	4H	21000
	74.1	15680	14890	14890	13510	9560	7770	30	11	2000	4000	260	4F	21000
	80.6	14840	12700	11300	10790	9340	7590	30	11	2000	4000	260	4F	21000
	93.0	15680	14890	14890	13510	9560	7770	30	11	2000	4000	260	4F	21000
	100	15680	14890	14890	13510	9560	7770	30	11	2000	4000	260	4F	21000
	113	14840	12700	11300	10790	9340	7590	26	11	2000	4000	160	4D	21000
	126	15680	14890	14890	13510	9560	7770	26	11	2000	4000	160	4D	21000
	139	14840	12700	11300	10790	9340	7590	22	11	2000	4000	160	4D	21000
	146	15000	14010	14010	13510	9560	7770	23	11	2000	4000	160	4D	21000
	162	14840	12700	11300	10790	9340	7590	19.4	11	2000	4000	100	4B	21000
	177	12300	12300	12300	12300	9560	7770	15.9	11	2000	4000	100	4B	21000
	202	14840	12700	11300	10790	9340	7590	15.9	11	2000	4000	100	4B	21000
	221	15000	13800	12900	12500	9560	7770	15.6	11	2000	4000	100	4B	21000
	239	11000	9600	8700	8700	8240	7490	10.5	11	2000	4000	50	4A	21000
	284	14330	12700	11300	10790	9340	7590	11.3	11	2000	4000	50	4A	21000
	336	11000	9600	8700	8700	8240	7490	7.5	11	2000	4000	50	4A	21000
L4	349	15680	14890	14890	13510	9560	7770	10.2	7.5	2000	4000	50	4A	21000
	406	14840	12700	11300	10790	9340	7590	8.2	7.5	2000	4000	50	4A	21000
	465	14840	12700	11300	10790	9340	7590	7.1	7.5	2000	4000	50	4A	21000
	509	15000	14010	14010	13510	9560	7770	7.0	7.5	2000	4000	50	4A	21000
	579	15680	14890	14890	13510	9560	7770	6.1	7.5	2000	4000	50	4A	21000
	654	14840	12700	11300	10790	9340	7590	5.1	7.5	2000	4000	50	4A	21000
	722	15680	14890	14890	13510	9560	7770	4.9	7.5	2000	4000	50	4A	21000
	801	14840	12700	11300	10790	9340	7590	4.1	7.5	2000	4000	50	4A	21000
	906	15680	14890	14890	13510	9560	7770	3.9	7.5	2000	4000	50	4A	21000
	999	14840	12700	11300	10790	9340	7590	3.3	7.5	2000	4000	50	4A	21000
	1157	14840	12700	11300	10790	9340	7590	2.9	7.5	2000	4000	50	4A	21000
	1274	12300	12300	12300	12300	9560	7770	2.3	7.5	2000	4000	50	4A	21000
	1408	15680	14890	14890	13510	9560	7770	2.5	7.5	2000	4000	50	4A	21000
	1591	15000	13800	12900	12500	9560	7770	2.2	7.5	2000	4000	50	4A	21000
	1767	15680	14890	14890	13510	9560	7770	2.0	7.5	2000	4000	50	4A	21000
	2041	14330	12700	11300	10790	9340	7590	1.6	7.5	2000	4000	50	4A	21000
	2423	11000	9600	8700	8700	8240	7490	1.1	7.5	2000	4000	50	4A	21000

309 L

324

23240 Nm

	i	M_{n2} [Nm]						P_1	P_t	n_1	n_{1max}	M_b		M_{2max}
		$n_2 \cdot h$	$n_2 \cdot h$	$n_2 \cdot h$	$n_2 \cdot h$	$n_2 \cdot h$	$n_2 \cdot h$							
	1:	10000	25000	50000	100000	500000	1000000	[kW]	[kW]	[min-1]	[min-1]	[Nm]		[Nm]
L1	3.43	13000	13000	13000	13000	12310	10920	150	25	1500	2000	3200	6L	27900
	4.09	23240	22070	22070	20260	13120	10660	150	25	1500	2000	3200	6L	29000
	5.25	21980	19060	16940	16190	12810	10410	150	25	1500	2000	3200	6L	29000
	6.23	17000	14400	13000	13000	12370	10280	150	25	1500	2000	3200	6L	29000
L2	12.3	13000	13000	13000	13000	10290	8360	60	18	1800	3800	1000	5K	27900
	14.7	17730	17730	17730	17730	11650	9460	60	18	1800	3800	1000	5K	29000
	17.4	21620	21260	21260	18580	11460	9310	60	18	1800	3800	1000	5K	29000
	21.8	18510	17500	17500	17140	11160	9070	60	18	1800	3800	1000	5K	29000
	25.4	14670	14300	14300	14300	11060	8990	60	18	1800	3800	800	5G	29000
	28.0	21980	19060	16940	16190	12810	10410	60	18	1800	3800	800	5G	29000
	32.6	18300	18100	16940	16190	12810	10410	60	18	1800	3800	630	5E	29000
	38.6	17000	14400	13000	13000	12370	10280	60	18	1800	3800	500	5C	29000
	46.7	17000	14400	13000	13000	12370	10280	58	18	1800	3800	400	5B	29000

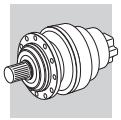

309 L

324

23240 Nm

	i	M_{n2} [Nm]						P_1	P_t	n_1	n_{1max}	M_b		M_{2max}
		$n_2 \cdot h$	$n_2 \cdot h$	$n_2 \cdot h$	$n_2 \cdot h$	$n_2 \cdot h$	$n_2 \cdot h$							
	1:	10000	25000	50000	100000	500000	1000000	[kW]	[kW]	[min-1]	[min-1]	[Nm]		[Nm]
L3	51.3	17730	17730	17730	17730	11650	9460	30	11	2000	4000	400	4K	29000
	60.5	21620	21260	21260	18580	11460	9310	30	11	2000	4000	400	4K	29000
	74.1	21620	21260	21260	18580	11460	9310	30	11	2000	4000	260	4F	29000
	80.6	21980	19060	16940	16190	12810	10410	30	11	2000	4000	260	4F	29000
	93.0	18510	17500	17500	17140	11160	9070	30	11	2000	4000	260	4F	29000
	100	21620	21260	21260	18580	11460	9310	30	11	2000	4000	260	4F	29000
	113	18300	18100	16940	16190	12810	10410	30	11	2000	4000	260	4F	29000
	126	18510	17500	17500	17140	11160	9070	30	11	2000	4000	260	4F	29000
	139	18300	18100	16940	16190	12810	10410	30	11	2000	4000	160	4D	29000
	162	21980	19060	16940	16190	12810	10410	29	11	2000	4000	160	4D	29000
	183	14670	14300	14300	14300	11060	8990	18.2	11	2000	4000	100	4B	29000
	202	21980	19060	16940	16190	12810	10410	23.9	11	2000	4000	100	4B	29000
	223	17000	14400	13000	13000	12370	10280	17.5	11	2000	4000	100	4B	29000
	239	17000	14400	13000	13000	12370	10280	16.3	11	2000	4000	100	4B	29000
	284	15800	15800	15800	15000	12810	10410	12.8	11	2000	4000	100	4B	29000
	336	17000	14400	13000	13000	12370	10280	11.6	11	2000	4000	100	4B	29000
L4	349	21620	21260	21260	18580	11460	9310	14.4	7.5	2000	4000	100	4B	29000
	406	21980	19060	16940	16190	12810	10410	12.3	7.5	2000	4000	50	4A	29000
	465	21980	19060	16940	16190	12810	10410	10.7	7.5	2000	4000	50	4A	29000
	509	14670	14300	14300	14300	11060	8990	6.7	7.5	2000	4000	50	4A	29000
	579	21620	21260	21260	18580	11460	9310	8.7	7.5	2000	4000	50	4A	29000
	654	18300	18100	16940	16190	12810	10410	6.6	7.5	2000	4000	50	4A	29000
	722	21620	21260	21260	18580	11460	9310	7.0	7.5	2000	4000	50	4A	29000
	801	18300	18100	16940	16190	12810	10410	5.4	7.5	2000	4000	50	4A	29000
	906	18510	17500	17500	17140	11160	9070	4.7	7.5	2000	4000	50	4A	29000
	999	18300	18100	16940	16190	12810	10410	4.3	7.5	2000	4000	50	4A	29000
	1149	17000	14400	13000	13000	12370	10280	3.5	7.5	2000	4000	50	4A	29000
	1286	17000	14400	13000	13000	12370	10280	3.1	7.5	2000	4000	50	4A	29000
	1380	17000	14400	13000	13000	12370	10280	2.9	7.5	2000	4000	50	4A	29000
	1605	17000	14400	13000	13000	12370	10280	2.5	7.5	2000	4000	50	4A	29000
	1723	17000	14400	13000	13000	12370	10280	2.3	7.5	2000	4000	50	4A	29000
	2003	17000	14400	13000	13000	12370	10280	1.9	7.5	2000	4000	50	4A	29000
	2423	17000	14400	13000	13000	12370	10280	1.7	7.5	2000	4000	50	4A	29000

310 L

336

34120 Nm

	i	M_{n2} [Nm]						P_1	P_t	n_1	n_{1max}	M_b		M_{2max}
		$n_2 \cdot h$	$n_2 \cdot h$	$n_2 \cdot h$	$n_2 \cdot h$	$n_2 \cdot h$	$n_2 \cdot h$							
	1:	10000	25000	50000	100000	500000	1000000	[kW]	[kW]	[min-1]	[min-1]	[Nm]		[Nm]
L1	4.09	34120	32340	26580	21590	13320	10820	175	35	1500	1800	—	—	47600
	5.25	30600	26240	23350	21100	13020	10570	175	35	1500	1800	—	—	47600
	6.23	26000	21200	18420	18230	12860	10440	175	35	1500	1800	—	—	47600
L2	14.7	34120	32340	26580	21590	13320	10820	75	22	1600	3000	2100	6G	47600
	17.4	34120	32340	26580	21590	13320	10820	75	22	1600	3000	2100	6G	47600
	21.8	34120	31930	26580	21590	13320	10820	75	22	1600	3000	1500	6E	47600
	25.4	27110	25910	25910	21590	13320	10820	75	22	1600	3000	1500	6E	47600
	28.0	30600	26240	23350	21100	13020	10570	75	22	1600	3000	1500	6E	47600
	30.7	21800	21800	21800	20150	13320	10820	75	22	1600	3000	1050	6C	47600
	32.6	30600	26240	23350	21100	13020	10570	75	22	1600	3000	1050	6C	47600
	38.6	26000	21200	18420	18230	12860	10440	75	22	1600	3000	850	6B	47600
	46.7	26000	21200	18420	18230	12860	10440	75	22	1600	3000	850	6B	47600
L3	53.0	34120	32340	26580	21590	13320	10820	40	18	1800	3800	630	5E	47600
	62.6	34120	32340	26580	21590	13320	10820	40	18	1800	3800	630	5E	47600
	73.9	34120	32340	26580	21590	13320	10820	40	18	1800	3800	500	5C	47600
	80.3	30600	26240	23350	21100	13020	10570	40	18	1800	3800	400	5B	47600
	91.3	34120	32340	26580	21590	13320	10820	40	18	1800	3800	400	5B	47600
	101	30600	26240	23350	21100	13020	10570	40	18	1800	3800	400	5B	47600
	110	34120	32340	26580	21590	13320	10820	40	18	1800	3800	400	5B	47600

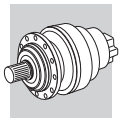

310 L

336

34120 Nm

	i	M_{n2} [Nm]						P_1	P_t	n_1	n_{1max}	M_b		M_{2max}
		$n_2 \cdot h$	$n_2 \cdot h$	$n_2 \cdot h$	$n_2 \cdot h$	$n_2 \cdot h$	$n_2 \cdot h$							
	1:	10000	25000	50000	100000	500000	1000000	[kW]	[kW]	[min-1]	[min-1]	[Nm]		[Nm]
L3	119	30600	26240	23350	21100	13020	10570	40	18	1800	3800	400	5B	47600
	130	34120	32340	26580	21590	13320	10820	40	18	1800	3800	400	5B	47600
	142	30600	26240	23350	21100	13020	10570	40	18	1800	3800	400	5B	47600
	164	34120	31930	26580	21590	13320	10820	38	18	1800	3800	400	5B	47600
	177	26000	21200	18420	18230	12860	10440	30	18	1800	3800	400	5B	47600
	202	30600	26240	23350	21100	13020	10570	30	18	1800	3800	400	5B	47600
	230	21800	21800	21800	20150	13320	10820	19.6	18	1800	3800	400	5B	47600
	249	26000	21200	18420	18230	12860	10440	22	18	1800	3800	400	5B	47600
	295	28000	25880	23350	21100	13020	10570	19.6	18	1800	3800	400	5B	47600
	350	26000	21200	18420	18230	12860	10440	15.3	18	1800	3800	400	5B	47600
L4	392	26000	21200	18420	18230	12860	10440	15.7	11	2000	4000	100	4B	47600
	451	34120	32340	26580	21590	13320	10820	15.7	11	2000	4000	100	4B	47600
	507	30600	26240	23350	21100	13020	10570	13.8	11	2000	4000	100	4B	47600
	556	34120	32340	26580	21590	13320	10820	11.5	11	2000	4000	50	4A	47600
	637	30600	26240	23350	21100	13020	10570	11.0	11	2000	4000	50	4A	47600
	726	30600	26240	23350	21100	13020	10570	9.6	11	2000	4000	50	4A	47600
	818	30600	26240	23350	21100	13020	10570	8.5	11	2000	4000	50	4A	47600
	939	34120	32340	26580	21590	13320	10820	6.8	11	2000	4000	50	4A	47600
	1021	30600	26240	23350	21100	13020	10570	6.8	11	2000	4000	50	4A	47600
	1164	30600	26240	23350	21100	13020	10570	6.0	11	2000	4000	50	4A	47600
	1259	28000	25880	23350	21100	13020	10570	5.3	11	2000	4000	50	4A	47600
	1438	26000	21200	18420	18230	12860	10440	4.3	11	2000	4000	50	4A	47600
	1672	26000	21200	18420	18230	12860	10440	3.7	11	2000	4000	50	4A	47600
	1794	26000	21200	18420	18230	12860	10440	3.4	11	2000	4000	50	4A	47600
	2022	26000	21200	18420	18230	12860	10440	3.0	11	2000	4000	50	4A	47600
	2523	26000	21200	18420	18230	12860	10440	2.4	11	2000	4000	50	4A	47600

311 L

348

48330 Nm

	i	M_{n2} [Nm]						P_1	P_t	n_1	n_{1max}	M_b		M_{2max}
		$n_2 \cdot h$	$n_2 \cdot h$	$n_2 \cdot h$	$n_2 \cdot h$	$n_2 \cdot h$	$n_2 \cdot h$							
	1:	10000	25000	50000	100000	500000	1000000	[kW]	[kW]	[min-1]	[min-1]	[Nm]		[Nm]
L1	4.09	48330	45840	38290	31100	19190	15590	200	35	1500	1800	—	—	58300
	5.25	45210	39550	35220	32000	19700	16000	200	35	1500	1800	—	—	58300
	6.23	34000	29500	27000	27000	18600	15100	200	35	1500	1800	—	—	58300
L2	14.0	35700	35700	35700	31100	19190	15590	115	26	1500	2500	3200	6L	58300
	16.7	48330	45840	38290	31100	19190	15590	115	26	1500	2500	3200	6L	58300
	18.0	43000	39550	35220	32000	19700	16000	115	26	1500	2500	2600	6K	58300
	21.5	46920	43390	38290	31100	19190	15590	115	26	1500	2500	2100	6G	58300
	25.5	35200	34500	34500	31100	19190	15590	115	26	1500	2500	1500	6E	58300
	27.6	45210	39550	35220	32000	19700	16000	115	26	1500	2500	2100	6G	58300
	32.7	43000	39550	35220	32000	19700	16000	115	26	1500	2500	1500	6E	58300
	38.8	34000	29500	27000	27000	18600	15100	115	26	1500	2500	850	6B	58300
L3	50.5	35700	35700	35700	31100	19190	15590	60	18	1800	3800	800	5G	58300
	60.2	48330	45840	38290	31100	19190	15590	60	18	1800	3800	800	5G	58300
	71.1	48330	45840	38290	31100	19190	15590	60	18	1800	3800	800	5G	58300
	77.3	46920	43390	38290	31100	19190	15590	60	18	1800	3800	800	5G	58300
	89.3	48330	45840	38290	31100	19190	15590	60	18	1800	3800	500	5C	58300
	104	48330	45840	38290	31100	19190	15590	60	18	1800	3800	500	5C	58300
	115	46920	43390	38290	31100	19190	15590	60	18	1800	3800	400	5B	58300
	126	48330	45840	38290	31100	19190	15590	60	18	1800	3800	400	5B	58300
	133	46920	43390	38290	31100	19190	15590	60	18	1800	3800	400	5B	58300
	147	45210	39550	35220	32000	19700	16000	59	18	1800	3800	400	5B	58300
	161	46920	43390	38290	31100	19190	15590	56	18	1800	3800	400	5B	58300
	171	45210	39550	35220	32000	19700	16000	52	18	1800	3800	400	5B	58300
	191	35200	34500	34500	31100	19190	15590	38	18	1800	3800	400	5B	58300
	203	43000	39550	35220	32000	19700	16000	44	18	1800	3800	400	5B	58300
	245	43000	39550	35220	32000	19700	16000	36	18	1800	3800	400	5B	58300

C

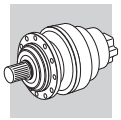

311 L

348

48330 Nm

	i	M_{n2} [Nm]						P_1	P_t	n_1	n_{1max}	M_b		M_{2max}
		$n_2 \cdot h$	$n_2 \cdot h$	$n_2 \cdot h$	$n_2 \cdot h$	$n_2 \cdot h$	$n_2 \cdot h$							
	1:	10000	25000	50000	100000	500000	1000000	[kW]	[kW]	[min-1]	[min-1]	[Nm]		[Nm]
L3	291	34000	29500	27000	27000	18600	15100	24	18	1800	3800	400	5B	58300
L4	348	48330	45840	38290	31100	19190	15590	30	11	2000	4000	160	4D	58300
	410	48330	45840	38290	31100	19190	15590	26	11	2000	4000	160	4D	58300
	512	48330	45840	38290	31100	19190	15590	21	11	2000	4000	100	4B	58300
	568	46920	43390	38290	31100	19190	15590	18.4	11	2000	4000	100	4B	58300
	627	45210	39550	35220	32000	19700	16000	16.2	11	2000	4000	100	4B	58300
	724	48330	45840	38290	31100	19190	15590	14.7	11	2000	4000	100	4B	58300
	825	46920	43390	38290	31100	19190	15590	12.6	11	2000	4000	100	4B	58300
	904	48330	45840	38290	31100	19190	15590	11.8	11	2000	4000	50	4A	58300
	986	45210	39550	35220	32000	19700	16000	10.3	11	2000	4000	50	4A	58300
	1058	45210	39550	35220	32000	19700	16000	9.6	11	2000	4000	50	4A	58300
	1230	45210	39550	35220	32000	19700	16000	8.3	11	2000	4000	50	4A	58300
	1415	43000	39550	35220	32000	19700	16000	7.2	11	2000	4000	50	4A	58300
	1680	34000	29500	27000	27000	18600	15100	4.8	11	2000	4000	50	4A	58300
	1766	43000	39550	35220	32000	19700	16000	5.8	11	2000	4000	50	4A	58300
	2096	34000	29500	27000	27000	18600	15100	3.8	11	2000	4000	50	4A	58300

313 L

360

57970 Nm

	i	M_{n2} [Nm]						P_1	P_t	n_1	n_{1max}	M_b		M_{2max}
		$n_2 \cdot h$	$n_2 \cdot h$	$n_2 \cdot h$	$n_2 \cdot h$	$n_2 \cdot h$	$n_2 \cdot h$							
	1:	10000	25000	50000	100000	500000	1000000	[kW]	[kW]	[min-1]	[min-1]	[Nm]		[Nm]
L1	4.14	55410	55000	55000	46000	28400	23000	250	45	900	1200	—	—	105000
	5.40	57970	49730	45000	45000	27800	22600	250	45	900	1200	—	—	105000
	6.50	49000	42400	39000	39000	27800	22500	250	45	900	1200	—	—	105000
L2	14.2	52000	52000	52000	46000	28400	23000	150	30	1500	2000	3200	6L	105000
	16.9	55410	55000	54000	45210	27900	22660	150	30	1500	2000	3200	6L	105000
	18.5	57970	49730	45000	45000	27800	22600	150	30	1500	2000	3200	6L	105000
	21.8	55410	55000	55000	45400	28000	22800	150	30	1500	2000	2600	6K	105000
	25.8	53000	52000	52000	45210	27900	22660	150	30	1500	2000	2100	6G	105000
	28.4	57970	49730	45000	45000	27800	22600	150	30	1500	2000	2100	6G	105000
	33.6	57970	49730	45000	45000	27800	22600	150	30	1500	2000	2100	6G	105000
	40.5	49000	42400	39000	39000	27700	22500	150	30	1500	2000	1500	6E	105000
L3	51.1	52000	52000	49140	45210	27900	22660	60	18	1800	3800	1000	5K	105000
	61.0	55410	55000	52510	45210	27900	22660	60	18	1800	3800	1000	5K	105000
	72.0	55410	55000	52510	45210	27900	22660	60	18	1800	3800	1000	5K	105000
	78.3	55410	55000	55000	45400	28000	22800	60	18	1800	3800	1000	5K	105000
	92.4	55410	55000	55000	45400	28000	22800	60	18	1800	3800	800	5G	105000
	110	53000	52000	52000	45210	27900	22660	60	18	1800	3800	500	5C	105000
	120	57970	49730	45000	45000	27800	22600	60	18	1800	3800	500	5C	105000
	135	55410	55000	55000	45400	28000	22800	60	18	1800	3800	500	5C	105000
	143	57970	49730	45000	45000	27800	22600	60	18	1800	3800	400	5B	105000
	151	57970	49730	45000	45000	27800	22600	60	18	1800	3800	400	5B	105000
	163	55410	55000	52510	45210	27900	22660	60	18	1800	3800	400	5B	105000
	176	57970	49730	45000	45000	27800	22600	60	18	1800	3800	400	5B	105000
	182	49000	42400	39000	39000	27700	22500	56	18	1800	3800	400	5B	105000
	194	53000	52000	52000	45210	27900	22660	57	18	1800	3800	400	5B	105000
	209	57970	49730	45000	45000	27800	22600	54	18	1800	3800	400	5B	105000
	252	57970	49730	45000	45000	27800	22600	45	18	1800	3800	400	5B	105000
	304	49000	42400	39000	39000	27700	22500	33	18	1800	3800	400	5B	105000
L4	352	55410	52510	52510	45210	27900	22660	30	11	2000	4000	160	4D	105000
	394	55410	55000	55000	45400	28000	22800	30	11	2000	4000	160	4D	105000
	452	55410	55000	52510	45210	27900	22660	29	11	2000	4000	160	4D	105000
	514	57970	49730	45000	45000	27800	22600	25	11	2000	4000	160	4D	105000
	564	55410	55000	52510	45210	27900	22660	23	11	2000	4000	160	4D	105000
	633	52800	52000	52000	45210	27900	22660	19.7	11	2000	4000	100	4B	105000
	695	57970	49730	45000	45000	27800	22600	18.7	11	2000	4000	100	4B	105000

C

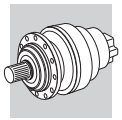

313 L

360

57970 Nm

	i	M_{n2} [Nm]						P_1	P_t	n_1	n_{1max}	M_b		M_{2max}
		$n_2 \cdot h$	$n_2 \cdot h$	$n_2 \cdot h$	$n_2 \cdot h$	$n_2 \cdot h$	$n_2 \cdot h$							
	1:	10000	25000	50000	100000	500000	1000000	[kW]	[kW]	[min^{-1}]	[min^{-1}]	[Nm]		[Nm]
L4	790	52800	52000	52000	45210	27900	22660	15.8	11	2000	4000	100	4B	105000
	889	57970	49730	45000	45000	27800	22600	14.6	11	2000	4000	100	4B	105000
	1014	57970	49730	45000	45000	27800	22600	12.8	11	2000	4000	100	4B	105000
	1117	52800	52000	52000	45210	27900	22660	11.2	11	2000	4000	50	4A	105000
	1266	57970	49730	45000	45000	27800	22600	10.3	11	2000	4000	50	4A	105000
	1394	52800	52000	52000	45210	27900	22660	9.0	11	2000	4000	50	4A	105000
	1502	57970	49730	45000	45000	27800	22600	8.7	11	2000	4000	50	4A	105000
	1817	57970	49730	45000	45000	27800	22600	7.2	11	2000	4000	50	4A	105000
	2187	49000	42400	39000	39000	27700	22500	5.3	11	2000	4000	50	4A	105000

314 L

372

84000 Nm

	i	M_{n2} [Nm]						P_1	P_t	n_1	n_{1max}	M_b		M_{2max}
		$n_2 \cdot h$	$n_2 \cdot h$	$n_2 \cdot h$	$n_2 \cdot h$	$n_2 \cdot h$	$n_2 \cdot h$							
	1:	10000	25000	50000	100000	500000	1000000	[kW]	[kW]	[min^{-1}]	[min^{-1}]	[Nm]		[Nm]
L1	4.25	84000	80000	77600	68000	42400	34240	260	55	450	800	—	—	115000
	5.33	79200	69600	65464	62400	39200	31760	260	55	450	800	—	—	115000
	6.20	66792	57416	52000	52000	32800	26640	260	55	450	800	—	—	115000
L2	17.4	84000	80000	77600	63200	38960	31680	175	40	1500	1800	—	—	115000
	22.3	84000	80000	77600	66400	40800	33360	175	40	1500	1800	—	—	115000
	26.5	84000	80000	77600	62400	38720	31520	175	40	1500	1800	—	—	115000
	28.0	79200	69600	65464	62400	39040	31760	175	40	1500	1800	—	—	115000
	33.2	79200	69600	65464	62400	39040	31760	175	40	1500	1800	—	—	115000
	38.6	66792	57416	52000	52000	32800	26640	175	40	1500	1800	—	—	115000
L3	62.6	84000	80000	77600	63200	38960	31680	75	25	1600	3000	2100	6G	115000
	73.9	84000	80000	77600	63200	38960	31680	75	25	1600	3000	2100	6G	115000
	92.7	84000	80000	77600	63200	38960	31680	75	25	1600	3000	1500	6E	115000
	108	84000	80000	77600	63200	38960	31680	75	25	1600	3000	1500	6E	115000
	138	84000	80000	77600	66400	40800	33360	75	25	1600	3000	1500	6E	115000
	164	84000	80000	77600	62400	38720	31520	75	25	1600	3000	1050	6C	115000
	174	79200	69600	65464	62400	39040	31760	75	25	1600	3000	1050	6C	115000
	206	79200	69600	65464	62400	39040	31760	71	25	1600	3000	850	6B	115000
	240	66792	57416	52000	52000	32800	26640	49	25	1600	3000	850	6B	115000
L4	314	84000	80000	77600	63200	38960	31680	40	15	1800	3800	630	5E	115000
	388	84000	80000	77600	63200	38960	31680	40	15	1800	3800	630	5E	115000
	458	84000	80000	77600	63200	38960	31680	39	15	1800	3800	500	5C	115000
	495	84000	80000	77600	63200	38960	31680	36	15	1800	3800	400	5B	115000
	554	84000	80000	77600	63200	38960	31680	32	15	1800	3800	400	5B	115000
	588	84000	80000	77600	66400	40800	33360	30	15	1800	3800	400	5B	115000
	668	84000	80000	77600	63200	38960	31680	27	15	1800	3800	400	5B	115000
	738	84000	80000	77600	66400	40800	33360	24	15	1800	3800	400	5B	115000
	858	84000	80000	77600	66400	40800	33360	21	15	1800	3800	400	5B	115000
	926	79200	69600	65464	62400	39040	31760	18.2	15	1800	3800	400	5B	115000
	1038	84000	80000	77600	66400	40800	33360	17.2	15	1800	3800	400	5B	115000
	1099	79200	69600	65464	62400	39040	31760	15.3	15	1800	3800	400	5B	115000
	1277	79200	69600	65464	62400	39040	31760	13.2	15	1800	3800	400	5B	115000
	1485	66792	57416	52000	52000	32800	26640	9.2	15	1800	3800	400	5B	115000
	1796	66792	57416	52000	52000	32800	26640	7.6	15	1800	3800	400	5B	115000

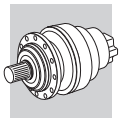

315 L

384

105000 Nm

	i	M_{n2} [Nm]						P_1	P_t	n_1	n_{1max}	M_b		M_{2max}
		$n_2 \cdot h$	$n_2 \cdot h$	$n_2 \cdot h$	$n_2 \cdot h$	$n_2 \cdot h$	$n_2 \cdot h$							
	1:	10000	25000	50000	100000	500000	1000000	[kW]	[kW]	[min-1]	[min-1]	[Nm]		[Nm]
L1	4.25	105000	100000	97000	85000	53000	42800	260	60	500	800	—	—	135000
	5.33	99000	87000	81830	78000	49000	39700	260	60	500	800	—	—	135000
	6.20	83490	71770	65000	65000	41000	33300	260	60	500	800	—	—	135000
L2	17.4	105000	100000	97000	79000	48700	39600	200	45	1500	1800	—	—	135000
	22.3	105000	100000	97000	83000	51000	41700	200	45	1500	1800	—	—	135000
	26.5	105000	100000	97000	78000	48400	39400	200	45	1500	1800	—	—	135000
	28.0	99000	87000	81830	78000	48800	39700	200	45	1500	1800	—	—	135000
	33.2	99000	87000	81830	78000	48800	39700	200	45	1500	1800	—	—	135000
	38.6	83490	71770	65000	65000	41000	33300	200	45	1500	1800	—	—	135000
L3	59.6	105000	100000	97000	79000	48700	39600	115	30	1500	2500	2600	6K	135000
	71.1	105000	100000	97000	79000	48700	39600	115	30	1500	2500	2100	6G	135000
	91.3	105000	100000	97000	79000	48700	39600	115	30	1500	2500	1500	6E	135000
	108	105000	100000	97000	79000	48700	39600	115	30	1500	2500	1100	6C	135000
	139	105000	100000	97000	83000	51000	41700	115	30	1500	2500	850	6B	135000
	165	105000	100000	97000	78000	48400	39400	110	30	1500	2500	850	6B	135000
	174	99000	87000	81830	78000	48800	39700	98	30	1500	2500	850	6B	135000
	207	99000	87000	81830	78000	48800	39700	82	30	1500	2500	850	6B	135000
	241	83490	71770	65000	65000	41000	33300	57	30	1500	2500	850	6B	135000
L4	302	105000	100000	97000	79000	48700	39600	60	18	1800	3800	400	5B	135000
	370	105000	100000	97000	79000	48700	39600	60	18	1800	3800	400	5B	135000
	441	105000	100000	97000	79000	48700	39600	51	18	1800	3800	400	5B	135000
	487	105000	100000	97000	79000	48700	39600	46	18	1800	3800	400	5B	135000
	533	105000	100000	97000	79000	48700	39600	42	18	1800	3800	400	5B	135000
	591	105000	100000	97000	83000	51000	41700	38	18	1800	3800	400	5B	135000
	672	105000	100000	97000	79000	48700	39600	33	18	1800	3800	400	5B	135000
	741	105000	100000	97000	83000	51000	41700	30	18	1800	3800	400	5B	135000
	862	105000	100000	97000	83000	51000	41700	26	18	1800	3800	400	5B	135000
	930	99000	87000	81830	78000	48800	39700	23	18	1800	3800	400	5B	135000
	1043	105000	100000	97000	83000	51000	41700	21	18	1800	3800	400	5B	135000
	1104	99000	87000	81830	78000	48800	39700	19.1	18	1800	3800	400	5B	135000
	1284	99000	87000	81830	78000	48800	39700	16.4	18	1800	3800	400	5B	135000
	1492	83490	71770	65000	65000	41000	33300	11.4	18	1800	3800	400	5B	135000
	1805	83490	71770	65000	65000	41000	33300	9.4	18	1800	3800	400	5B	135000

316 L

396

138820 Nm

	i	M_{n2} [Nm]						P_1	P_t	n_1	n_{1max}	M_b		M_{2max}
		$n_2 \cdot h$	$n_2 \cdot h$	$n_2 \cdot h$	$n_2 \cdot h$	$n_2 \cdot h$	$n_2 \cdot h$							
	1:	10000	25000	50000	100000	500000	1000000	[kW]	[kW]	[min-1]	[min-1]	[Nm]		[Nm]
L1	4.25	138820	130420	113000	100000	66000	54000	280	68	350	500	—	—	192000
L2	17.4	138820	126000	103000	83700	51600	42000	200	50	1500	1800	—	—	192000
	22.3	138820	126000	107000	85300	53300	42700	200	50	1500	1800	—	—	192000
	26.5	124000	115000	98650	80130	49440	40500	200	50	1500	1800	—	—	192000
L3	59.6	138820	126000	103000	83700	51600	42000	115	35	1500	2500	3200	6L	192000
	71.1	138820	126000	103000	83700	51600	42000	115	35	1500	2500	2600	6K	192000
	76.5	138820	126000	107000	85300	53300	42700	115	35	1500	2500	2600	6K	192000
	91.3	138820	126000	103000	83700	51600	42000	115	35	1500	2500	2100	6G	192000
	108	138820	125920	103000	83700	51600	42000	115	35	1500	2500	2100	6G	192000
	117	138820	126000	107000	85300	53300	42700	115	35	1500	2500	1500	6E	192000
	139	138820	122980	103000	83700	51600	42000	115	35	1500	2500	1500	6E	192000
	165	124000	115000	98650	80130	49440	40500	115	35	1500	2500	1100	6C	192000
L4	215	138820	126000	103000	83700	51600	42000	60	18	1800	3800	800	5G	192000
	256	138820	126000	103000	83700	51600	42000	60	18	1800	3800	800	5G	192000
	302	138820	126000	103000	83700	51600	42000	60	18	1800	3800	630	5E	192000
	329	138820	126000	103000	83700	51600	42000	60	18	1800	3800	630	5E	192000

C

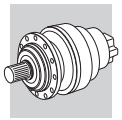

316 L

396

138820 Nm

	i	M_{n2} [Nm]						P_1	P_t	n_1	n_{1max}	M_b		M_{2max}
		$n_2 \cdot h$	$n_2 \cdot h$	$n_2 \cdot h$	$n_2 \cdot h$	$n_2 \cdot h$	$n_2 \cdot h$							
	1:	10000	25000	50000	100000	500000	1000000	[kW]	[kW]	[min-1]	[min-1]	[Nm]		[Nm]
L4	370	138820	126000	103000	83700	51600	42000	60	18	1800	3800	500	5C	192000
	441	138820	126000	103000	83700	51600	42000	60	18	1800	3800	400	5B	192000
	487	138820	126000	103000	83700	51600	42000	59	18	1800	3800	400	5B	192000
	533	138820	126000	103000	83700	51600	42000	54	18	1800	3800	400	5B	192000
	566	138820	126000	103000	83700	51600	42000	51	18	1800	3800	400	5B	192000
	591	138820	122980	103000	83700	51600	42000	48	18	1800	3800	400	5B	192000
	625	138820	126000	107000	85300	53300	42700	46	18	1800	3800	400	5B	192000
	685	138820	126000	103000	83700	51600	42000	42	18	1800	3800	400	5B	192000
	726	138820	126000	107000	85300	53300	42700	40	18	1800	3800	400	5B	192000
	741	138820	122980	103000	83700	51600	42000	38	18	1800	3800	400	5B	192000
	812	138820	125920	103000	83700	51600	42000	35	18	1800	3800	400	5B	192000
	862	138820	122980	103000	83700	51600	42000	33	18	1800	3800	400	5B	192000
	1043	138820	122980	103000	83700	51600	42000	27	18	1800	3800	400	5B	192000
	1237	124000	115000	98650	80130	49440	40500	21	18	1800	3800	400	5B	192000

317 L

406

208110 Nm

	i	M_{n2} [Nm]						P_1	P_t	n_1	n_{1max}	M_b		M_{2max}
		$n_2 \cdot h$	$n_2 \cdot h$	$n_2 \cdot h$	$n_2 \cdot h$	$n_2 \cdot h$	$n_2 \cdot h$							
	1:	10000	25000	50000	100000	500000	1000000	[kW]	[kW]	[min-1]	[min-1]	[Nm]		[Nm]
L1	4.09	208110	196530	166000	135000	83000	67240	300	85	200	300	—	—	393000
	5.25	187860	172400	154050	131030	80850	65670	300	85	200	300	—	—	393000
	6.23	156150	134380	119950	118770	79850	64860	300	85	200	300	—	—	393000
L2	16.9	207080	180000	147000	120000	74000	60000	250	55	900	1200	—	—	393000
	22.1	184310	177000	144000	117000	72000	59000	250	55	900	1200	—	—	393000
	26.6	155000	155000	144000	117000	72000	59000	250	55	900	1200	—	—	393000
	28.4	187860	172400	154050	131030	80850	65670	250	55	900	1200	—	—	393000
	34.1	170000	163960	154050	131030	80850	65670	250	55	900	1200	—	—	393000
	40.5	156150	134380	119950	118770	79850	64860	250	55	900	1200	—	—	393000
L3	58.1	207080	180000	147000	120000	74000	60000	150	35	1500	2000	3200	6L	393000
	69.3	207080	178190	144740	117560	72540	58920	150	35	1500	2000	3200	6L	393000
	89.0	207080	179000	145000	118000	73000	59000	150	35	1500	2000	2600	6K	393000
	106	207080	178190	144740	117560	72540	58920	150	35	1500	2000	2100	6G	393000
	116	184310	177000	144000	117000	72000	59000	150	35	1500	2000	1500	6E	393000
	138	184310	177000	144000	117000	72000	59000	150	35	1500	2000	1500	6E	393000
	166	155000	155000	144000	117000	72000	59000	150	35	1500	2000	1100	6C	393000
	179	170000	163960	154050	131030	80850	65670	150	35	1500	2000	1100	6C	393000
	213	170000	163960	154050	131030	80850	65670	138	35	1500	2000	850	6B	393000
	252	156150	134380	119950	118770	79850	64860	99	35	1500	2000	850	6B	393000
L4	310	207080	178190	144740	117560	72540	58920	60	18	1800	3800	630	5E	393000
	360	207080	178190	144740	117560	72540	58920	60	18	1800	3800	500	5C	393000
	449	207080	178190	144740	117560	72540	58920	60	18	1800	3800	500	5C	393000
	493	184310	177000	144000	117000	72000	59000	60	18	1800	3800	400	5B	393000
	552	207080	179000	145000	118000	73000	59000	60	18	1800	3800	400	5B	393000
	619	184310	177000	144000	117000	72000	59000	60	18	1800	3800	400	5B	393000
	719	184310	177000	144000	117000	72000	59000	53	18	1800	3800	400	5B	393000
	792	207080	178190	144740	117560	72540	58920	48	18	1800	3800	400	5B	393000
	904	170000	163960	154050	131030	80850	65670	40	18	1800	3800	400	5B	393000
	1032	184310	177000	144000	117000	72000	59000	37	18	1800	3800	400	5B	393000
	1134	170000	163960	154050	131030	80850	65670	32	18	1800	3800	400	5B	393000
	1318	170000	163960	154050	131030	80850	65670	27	18	1800	3800	400	5B	393000
	1595	170000	163960	154050	131030	80850	65670	23	18	1800	3800	400	5B	393000
	1893	156150	134380	119950	118770	79850	64860	16.3	18	1800	3800	400	5B	393000

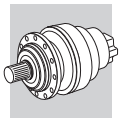

318 L

416

280580 Nm

	i	M_{n2} [Nm]						P_1	P_t	n_1	n_{1max}	M_b		M_{2max}
		$n_2 \cdot h$	$n_2 \cdot h$	$n_2 \cdot h$	$n_2 \cdot h$	$n_2 \cdot h$	$n_2 \cdot h$							
	1:	10000	25000	50000	100000	500000	1000000	[kW]	[kW]	[min-1]	[min-1]	[Nm]		[Nm]
L1	4.40	280580	262990	218310	177320	109410	88870	340	95	200	300	—	—	500000
L2	18.7	280580	262990	218310	177320	109410	88870	260	63	500	800	—	—	500000
	23.5	280580	262990	218310	177320	109410	88870	260	63	500	800	—	—	500000
	27.3	280580	262990	218310	177320	109410	88870	260	63	500	800	—	—	500000
L3	76.5	280580	262990	218310	177320	109410	88870	200	40	1500	1800	—	—	500000
	98.2	280580	262990	218310	177320	109410	88870	200	40	1500	1800	3200	6L	500000
	117	280580	262990	218310	177320	109410	88870	200	40	1500	1800	3200	6L	500000
	123	280580	262990	218310	177320	109410	88870	200	40	1500	1800	2600	6K	500000
	146	280580	262990	218310	177320	109410	88870	200	40	1500	1800	2100	6G	500000
	170	280580	262990	218310	177320	109410	88870	200	40	1500	1800	2100	6G	500000
L4	262	280580	262990	218310	177320	109410	88870	115	22	1500	2500	1500	6E	500000
	313	280580	262990	218310	177320	109410	88870	115	22	1500	2500	1100	6C	500000
	337	280580	262990	218310	177320	109410	88870	115	22	1500	2500	1100	6C	500000
	402	280580	262990	218310	177320	109410	88870	110	22	1500	2500	850	6B	500000
	422	280580	262990	218310	177320	109410	88870	105	22	1500	2500	850	6B	500000
	477	280580	262990	218310	177320	109410	88870	93	22	1500	2500	850	6B	500000
	515	280580	262990	218310	177320	109410	88870	86	22	1500	2500	850	6B	500000
	612	280580	262990	218310	177320	109410	88870	73	22	1500	2500	850	6B	500000
	647	280580	262990	218310	177320	109410	88870	69	22	1500	2500	850	6B	500000
	726	280580	262990	218310	177320	109410	88870	61	22	1500	2500	850	6B	500000
	768	280580	262990	218310	177320	109410	88870	58	22	1500	2500	850	6B	500000
	911	280580	262990	218310	177320	109410	88870	49	22	1500	2500	850	6B	500000
	1059	280580	262990	218310	177320	109410	88870	41	22	1500	2500	850	6B	500000

C

319 L

426

476410 Nm

	i	M_{n2} [Nm]						P_1	P_t	n_1	n_{1max}	M_b		M_{2max}
		$n_2 \cdot h$	$n_2 \cdot h$	$n_2 \cdot h$	$n_2 \cdot h$	$n_2 \cdot h$	$n_2 \cdot h$							
	1:	10000	25000	50000	100000	500000	1000000	[kW]	[kW]	[min-1]	[min-1]	[Nm]		[Nm]
L1	4.88	476410	383900	311830	253280	156280	126940	380	115	200	300	—	—	680000
	5.77	367580	317550	284270	249240	153790	124910	380	115	200	300	—	—	680000
L2	20.7	403720	348000	308000	250000	154000	125000	260	70	500	800	—	—	680000
	24.5	367580	317550	280280	248000	153000	124000	260	70	500	800	—	—	680000
	26.0	389910	348000	286000	233000	144000	117000	260	70	500	800	—	—	680000
	30.2	308140	296000	241000	196000	121000	98000	260	70	500	800	—	—	680000
	35.8	359680	317550	267610	220000	136000	110000	260	70	500	800	—	—	680000
L3	84.8	403720	348000	286000	232000	143000	116000	200	50	1500	1800	—	—	680000
	109	403720	348000	301000	245000	151000	123000	200	50	1500	1800	—	—	680000
	129	403720	348000	284000	231000	142000	116000	200	50	1500	1800	3200	6L	680000
	137	389910	348000	286000	233000	144000	117000	200	50	1500	1800	2600	6K	680000
	162	367580	317550	270690	248000	153000	124000	200	50	1500	1800	2600	6K	680000
	188	308140	296000	241000	196000	121000	98000	200	50	1500	1800	2100	6G	680000
	223	359680	317550	267610	220000	136000	110000	200	50	1500	1800	2100	6G	680000
L4	347	403720	348000	286000	232000	143000	116000	115	30	1500	2500	1100	6C	680000
	445	403720	348000	286000	232000	143000	116000	115	30	1500	2500	850	6B	680000
	528	403720	348000	286000	232000	143000	116000	115	30	1500	2500	850	6B	680000
	571	403720	348000	301000	245000	151000	123000	109	30	1500	2500	850	6B	680000
	678	403720	348000	301000	245000	151000	123000	92	30	1500	2500	850	6B	680000
	717	389910	348000	286000	233000	144000	117000	87	30	1500	2500	850	6B	680000
	850	389910	348000	286000	233000	144000	117000	73	30	1500	2500	850	6B	680000
	912	359680	317550	267610	220000	136000	110000	66	30	1500	2500	850	6B	680000
	1007	367580	317550	270690	248000	153000	124000	60	30	1500	2500	850	6B	680000
	1195	367580	317550	270690	248000	153000	124000	50	30	1500	2500	850	6B	680000
	1389	359680	317550	267610	220000	136000	110000	43	30	1500	2500	850	6B	680000

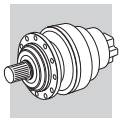

321 L

436

655740 Nm

	i	M_{n2} [Nm]						P_1	P_t	n_1	n_{1max}	M_b		M_{2max}
		$n_2 \cdot h$	$n_2 \cdot h$	$n_2 \cdot h$	$n_2 \cdot h$	$n_2 \cdot h$	$n_2 \cdot h$							
	1:	10000	25000	50000	100000	500000	1000000	[kW]	[kW]	[min^{-1}]	[min^{-1}]	[Nm]		[Nm]
L1	4.44	655740	517290	420170	341290	210580	171050	540	115	200	300	—	—	934000
L2	18.2	655740	517290	420170	341290	210580	171050	300	95	200	300	—	—	934000
	23.3	655740	517290	420170	341290	210580	172000	300	95	200	300	—	—	934000
	27.7	536350	517290	420170	341290	210580	171050	300	95	200	300	—	—	934000
L3	75.3	655740	517290	420170	341290	210580	171050	250	60	1000	1200	—	—	934000
	98.2	655740	517290	420170	341290	210580	171050	250	60	1000	1200	—	—	934000
	118	655740	517290	420170	341290	210580	171050	250	60	1000	1200	—	—	934000
	126	655740	517290	420170	341290	210580	172000	250	60	1000	1200	—	—	934000
	152	655740	517290	420170	341290	210580	172000	250	60	1000	1200	—	—	934000
	180	536350	517290	420170	341290	210580	171050	250	60	1000	1200	—	—	934000
L4	258	655740	517290	420170	341290	210580	171050	150	35	1500	2000	2100	6G	934000
	308	655740	517290	420170	341290	210580	171050	150	35	1500	2000	2100	6G	934000
	395	655740	517290	420170	341290	210580	171050	150	35	1500	2000	2100	6G	934000
	469	655740	517290	420170	341290	210580	171050	150	35	1500	2000	1500	6E	934000
	515	655740	517290	420170	341290	210580	171050	150	35	1500	2000	1500	6E	934000
	612	655740	517290	420170	341290	210580	171050	150	35	1500	2000	1100	6C	934000
	736	655740	517290	420170	341290	210580	171050	130	35	1500	2000	850	6B	934000
	796	655740	517290	420170	341290	210580	172000	120	35	1500	2000	850	6B	934000
	945	655740	517290	420170	341290	210580	172000	101	35	1500	2000	850	6B	934000
	1122	536350	517290	420170	341290	210580	171050	79	35	1500	2000	850	6B	934000

323 L

446

890310 Nm

	i	M_{n2} [Nm]						P_1	P_t	n_1	n_{1max}	M_b		M_{2max}
		$n_2 \cdot h$	$n_2 \cdot h$	$n_2 \cdot h$	$n_2 \cdot h$	$n_2 \cdot h$	$n_2 \cdot h$							
	1:	10000	25000	50000	100000	500000	1000000	[kW]	[kW]	[min^{-1}]	[min^{-1}]	[Nm]		[Nm]
L1	4.60	890310	829940	742050	602740	371910	302080	850	150	150	250	—	—	1580000
L2	19.6	890310	829940	742050	602740	371910	302080	380	130	200	300	—	—	1580000
	22.4	890310	829940	742050	602740	371910	302080	380	130	200	300	—	—	1580000
	26.5	890310	829940	742050	602740	371910	302080	380	130	200	300	—	—	1580000
	33.1	890310	829940	742050	602740	371910	302080	380	130	200	300	—	—	1580000
L3	83.3	890310	829940	742050	602740	371910	302080	260	90	500	800	—	—	1580000
	104.6	890310	829940	742050	602740	371910	302080	260	90	500	800	—	—	1580000
	112.8	890310	829940	742050	602740	371910	302080	260	90	500	800	—	—	1580000
	119.6	890310	829940	742050	602740	371910	302080	260	90	500	800	—	—	1580000
	141.5	890310	829940	742050	602740	371910	302080	260	90	500	800	—	—	1580000
	164.5	890310	829940	742050	602740	371910	302080	260	90	500	800	—	—	1580000
	205.3	890310	829940	742050	602740	371910	302080	210	90	500	800	—	—	1580000
L4	341.0	890310	829940	742050	602740	371910	302080	200	50	1500	1800	3200	6L	1580000
	389.9	890310	829940	742050	602740	371910	302080	200	50	1500	1800	3200	6L	1580000
	437.6	890310	829940	742050	602740	371910	302080	200	50	1500	1800	3200	6L	1580000
	500.4	890310	829940	742050	602740	371910	302080	200	50	1500	1800	3200	6L	1580000
	568.8	890310	829940	742050	602740	371910	302080	200	50	1500	1800	2600	6K	1580000
	627.9	890310	829940	742050	602740	371910	302080	200	50	1500	1800	2600	6K	1580000
	702.8	890310	829940	742050	602740	371910	302080	197	50	1500	1800	2600	6K	1580000
	757.6	890310	829940	742050	602740	371910	302080	182	50	1500	1800	2600	6K	1580000
	881.9	890310	829940	742050	602740	371910	302080	157	50	1500	1800	2600	6K	1580000
	1025.2	890310	829940	742050	602740	371910	302080	135	50	1500	1800	2600	6K	1580000
	1100.6	890310	829940	742050	602740	371910	302080	126	50	1500	1800	2600	6K	1580000
	1279.5	890310	829940	742050	602740	371910	302080	108	50	1500	1800	2600	6K	1580000

C

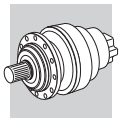

325 L	450	1286700 Nm

	i	M_{n2} [Nm]						P_1	P_t	n_1	n_{1max}	M_b		M_{2max}
		$n_2 \cdot h$	$n_2 \cdot h$	$n_2 \cdot h$	$n_2 \cdot h$	$n_2 \cdot h$	$n_2 \cdot h$							
	1:	10000	25000	50000	100000	500000	1000000	[kW]	[kW]	[min^{-1}]	[min^{-1}]	[Nm]		[Nm]
L1	4.60	1286700	1166950	947860	769900	475050	385860	1050	190	120	250	—	—	2000000
L2	19.6	1286600	1104050	896760	729000	449450	365060	380	160	200	300	—	—	2000000
	22.4	1286700	1083740	880270	715000	441180	358350	380	160	200	300	—	—	2000000
	26.5	1286700	1066430	866210	703580	434130	352630	380	160	200	300	—	—	2000000
	33.1	963170	963170	845000	686160	423380	343890	380	160	200	300	—	—	2000000
L3	83.3	1286600	1104050	896760	728400	449450	365060	260	115	500	800	—	—	2000000
	104.6	1286600	1104050	896760	728400	449450	365060	260	115	500	800	—	—	2000000
	112.8	1286700	1066430	866210	703580	434130	352630	260	115	500	800	—	—	2000000
	119.6	1286700	1083740	880270	715000	441180	358350	260	115	500	800	—	—	2000000
	141.5	1286700	1066430	866210	703580	434130	352630	260	115	500	800	—	—	2000000
	164.5	1286700	1066430	866210	703580	434130	352630	260	115	500	800	—	—	2000000
	205.3	963170	963170	845000	686160	423380	343890	226	115	500	800	—	—	2000000
L4	341.0	1286600	1104050	896760	728400	449450	365060	200	65	1500	1800	3200	6L	2000000
	389.9	1286700	1083740	880270	715000	441180	358350	200	65	1500	1800	3200	6L	2000000
	437.6	1286600	1104050	896760	728400	449450	365060	200	65	1500	1800	3200	6L	2000000
	500.4	1286700	1083740	880270	715000	441180	358350	200	65	1500	1800	3200	6L	2000000
	568.8	1286700	1083740	880270	715000	441180	358350	200	65	1500	1800	3200	6L	2000000
	627.9	1286700	1083740	880270	715000	441180	358350	200	65	1500	1800	3200	6L	2000000
	702.8	1286700	1066430	866210	703580	434130	352630	200	65	1500	1800	3200	6L	2000000
	757.6	1286600	1104050	896760	728400	449450	365060	200	65	1500	1800	2600	6K	2000000
	881.9	1286700	1066430	866210	703580	434130	352630	200	65	1500	1800	2600	6K	2000000
	1025.2	1286700	1066430	866210	703580	434130	352630	193	65	1500	1800	2600	6K	2000000
	1100.6	963170	963170	845120	686350	423550	343890	135	65	1500	1800	2600	6K	2000000
	1279.5	963170	963170	845120	686350	423550	343890	116	65	1500	1800	2600	6K	2000000

C

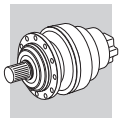

C

24.8 RATING CHARTS FOR RIGHT ANGLE UNITS 300 R

Reading the rating chart.

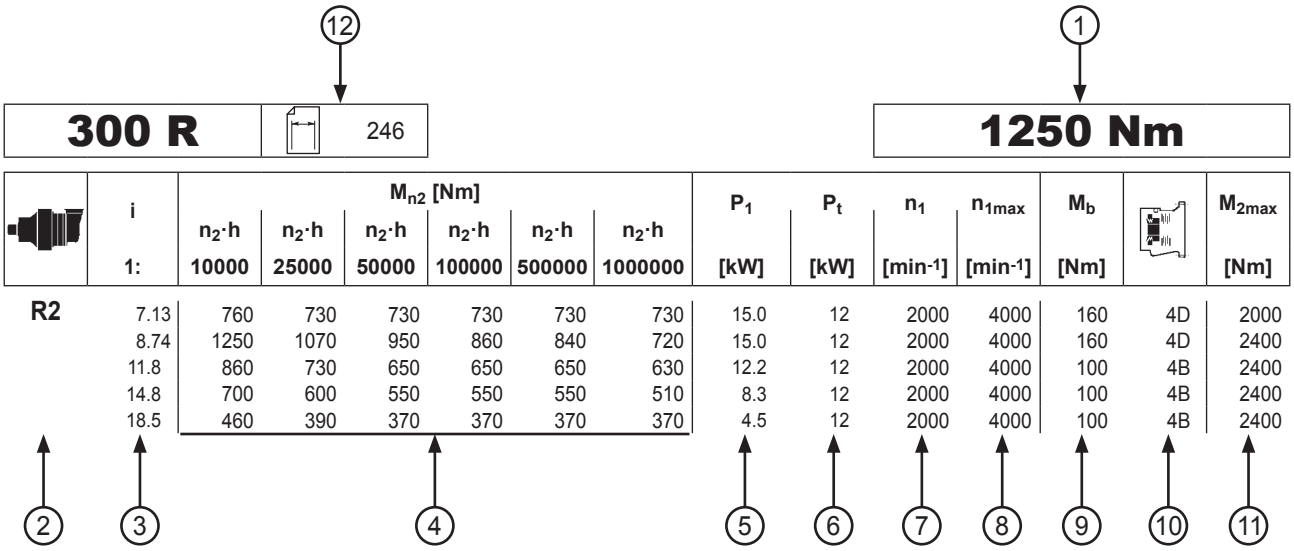

	i	M_{n2} [Nm]						P_1	P_t	n_1	n_{1max}	M_b		M_{2max}
		$n_2 \cdot h$	$n_2 \cdot h$	$n_2 \cdot h$	$n_2 \cdot h$	$n_2 \cdot h$	$n_2 \cdot h$							
	1:	10000	25000	50000	100000	500000	1000000	[kW]	[kW]	[min-1]	[min-1]	[Nm]		[Nm]
R2	7.13	760	730	730	730	730	730	15.0	12	2000	4000	160	4D	2000
	8.74	1250	1070	950	860	840	720	15.0	12	2000	4000	160	4D	2400
	11.8	860	730	650	650	650	630	12.2	12	2000	4000	100	4B	2400
	14.8	700	600	550	550	550	510	8.3	12	2000	4000	100	4B	2400
	18.5	460	390	370	370	370	370	4.5	12	2000	4000	100	4B	2400
				4				5	6	7	8	9	10	11
2	3													

1	Reference torque
2	Number of reduction stages (right-angled gear unit)
3	Gear ratio
4	Gearbox rated output torque based on: - service factor f_S=1 - $n_2 \cdot h$ indicated
5	Maximum power transmitted to the input shaft
6	Gearbox thermal capacity
7	Input angular velocity
8	Maximum input angular velocity
9	Rated brake torque (Hydraulic brake)
10	Negative multidisc hydraulic brake
11	Maximum output torque at gearbox
12	Page where dimensions can be sorted from

C

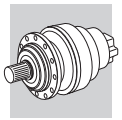

300 R

246

1250 Nm

	i	M_{n2} [Nm]						P_1	Pt	n_1	n_{1max}	M_b		M_{2max}
		$n_2 \cdot h$	$n_2 \cdot h$	$n_2 \cdot h$	$n_2 \cdot h$	$n_2 \cdot h$	$n_2 \cdot h$							
	1:	10000	25000	50000	100000	500000	1000000	[kW]	[kW]	[min^{-1}]	[min^{-1}]	[Nm]		[Nm]
R2	7.13	760	730	730	730	730	730	15.0	12	2000	4000	160	4D	2000
	8.74	1250	1070	950	860	840	720	15.0	12	2000	4000	160	4D	2400
	11.8	860	730	650	650	650	630	12.2	12	2000	4000	100	4B	2400
	14.8	700	600	550	550	550	510	8.3	12	2000	4000	100	4B	2400
	18.5	460	390	370	370	370	370	4.5	12	2000	4000	100	4B	2400
R3	24.8	760	730	730	730	730	730	6.2	12	2000	4000	50	4A	2000
	30.4	1250	1070	950	860	840	720	6.6	12	2000	4000	50	4A	2400
	37.3	1250	1070	950	860	840	720	5.5	12	2000	4000	50	4A	2400
	41.2	860	730	650	650	650	630	3.6	12	2000	4000	50	4A	2400
	50.4	1250	1070	950	860	840	720	4.3	12	2000	4000	50	4A	2400
	62.9	1250	1070	950	860	840	720	3.5	12	2000	4000	50	4A	2400
	68.2	860	730	650	650	650	630	2.4	12	2000	4000	50	4A	2400
	78.7	1250	1070	950	860	840	720	2.9	12	2000	4000	50	4A	2400
	85.2	860	730	650	650	650	630	2.0	12	2000	4000	50	4A	2400
	106	860	730	650	650	650	630	1.7	12	2000	4000	50	4A	2400
	133	700	600	550	550	550	510	1.2	12	2000	4000	50	4A	2400
R4	106	1250	1070	950	860	840	720	2.2	10	2000	4000	50	4A	2400
	130	1250	1070	950	860	840	720	1.8	10	2000	4000	50	4A	2400
	143	860	730	650	650	650	630	1.4	10	2000	4000	50	4A	2400
	159	1250	1070	950	860	840	720	1.5	10	2000	4000	50	4A	2400
	175	1250	1070	950	860	840	720	1.3	10	2000	4000	50	4A	2400
	215	1250	1070	950	860	840	720	1.1	10	2000	4000	50	4A	2400
	237	860	730	650	650	650	630	0.86	10	2000	4000	50	4A	2400
	268	1250	1070	950	860	840	720	0.88	10	2000	4000	50	4A	2400
	291	1250	1070	950	860	840	720	0.81	10	2000	4000	50	4A	2400
	363	1250	1070	950	860	840	720	0.65	10	2000	4000	50	4A	2400
	394	860	730	650	650	650	630	0.52	10	2000	4000	50	4A	2400
	453	1250	1070	950	860	840	720	0.52	10	2000	4000	50	4A	2400
	491	860	730	650	650	650	630	0.41	10	2000	4000	50	4A	2400
	613	860	730	650	650	650	630	0.33	10	2000	4000	50	4A	2400
	766	860	730	650	650	650	630	0.27	10	2000	4000	50	4A	2400

301 R

256

2060 Nm

	i	M_{n2} [Nm]						P_1	Pt	n_1	n_{1max}	M_b		M_{2max}
		$n_2 \cdot h$	$n_2 \cdot h$	$n_2 \cdot h$	$n_2 \cdot h$	$n_2 \cdot h$	$n_2 \cdot h$							
	1:	10000	25000	50000	100000	500000	1000000	[kW]	[kW]	[min^{-1}]	[min^{-1}]	[Nm]		[Nm]
R2	7.13	1490	1430	1430	1430	1430	1300	15.0	12	2000	4000	260	4F	3200
	8.74	2060	2060	1890	1730	1580	1280	15.0	12	2000	4000	330	4H	3200
	11.8	1720	1460	1300	1300	1300	1240	15.0	12	2000	4000	260	4F	3200
	14.8	1150	1150	1150	1150	1150	940	15.0	12	2000	4000	160	4D	3200
	18.5	920	780	740	740	740	740	8.0	12	2000	4000	160	4D	3200
R3	24.8	1490	1430	1430	1430	1430	1300	12.4	12	2000	4000	100	4B	3400
	30.4	2460	2140	1900	1730	1580	1280	13.1	12	2000	4000	100	4B	3400
	37.3	2460	2140	1900	1730	1580	1280	10.8	12	2000	4000	100	4B	3400
	41.2	1720	1460	1300	1300	1300	1240	7.3	12	2000	4000	100	4B	3400
	50.4	2460	2140	1900	1730	1580	1280	8.4	12	2000	4000	100	4B	3400
	62.9	2000	2000	1830	1730	1580	1280	7.0	12	2000	4000	50	4A	3400
	68.2	1720	1460	1300	1300	1300	1240	4.8	12	2000	4000	50	4A	3400
	78.7	1600	1600	1600	1600	1530	1280	5.8	12	2000	4000	50	4A	3400
	85.2	1720	1460	1300	1300	1300	1240	4.0	12	2000	4000	50	4A	3400
	106	1720	1460	1300	1300	1300	1240	3.3	12	2000	4000	50	4A	3400
	133	1150	1150	1150	1150	1150	940	2.0	12	2000	4000	50	4A	3400
R4	106	2460	2140	1900	1730	1580	1280	4.5	10	2000	4000	50	4A	3400
	130	2460	2140	1900	1730	1580	1280	3.6	10	2000	4000	50	4A	3400
	143	1720	1460	1300	1300	1300	1240	2.7	10	2000	4000	50	4A	3400
	159	2460	2140	1900	1730	1580	1280	3.0	10	2000	4000	50	4A	3400

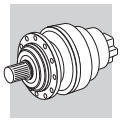

301 R

256

2060 Nm

	i	M_{n2} [Nm]						P_1	Pt	n_1	n_{1max}	M_b		M_{2max}
		$n_2 \cdot h$	$n_2 \cdot h$	$n_2 \cdot h$	$n_2 \cdot h$	$n_2 \cdot h$	$n_2 \cdot h$							
	1:	10000	25000	50000	100000	500000	1000000	[kW]	[kW]	[min^{-1}]	[min^{-1}]	[Nm]		[Nm]
R4	175	2460	2140	1900	1730	1580	1280	2.7	10	2000	4000	50	4A	3400
	215	2460	2140	1900	1730	1580	1280	2.2	10	2000	4000	50	4A	3400
	237	1720	1460	1300	1300	1300	1240	1.7	10	2000	4000	50	4A	3400
	268	2460	2140	1900	1730	1580	1280	1.8	10	2000	4000	50	4A	3400
	291	2460	2140	1900	1730	1580	1280	1.6	10	2000	4000	50	4A	3400
	363	2460	2140	1900	1730	1580	1280	1.3	10	2000	4000	50	4A	3400
	394	1720	1460	1300	1300	1300	1240	1.0	10	2000	4000	50	4A	3400
	453	2000	2000	1830	1730	1580	1280	1.0	10	2000	4000	50	4A	3400
	491	1720	1460	1300	1300	1300	1240	0.82	10	2000	4000	50	4A	3400
	613	1720	1460	1300	1300	1300	1240	0.66	10	2000	4000	50	4A	3400
	766	1720	1460	1300	1300	1300	1240	0.52	10	2000	4000	50	4A	3400

303 R

266

2970 Nm

	i	M_{n2} [Nm]						P_1	Pt	n_1	n_{1max}	M_b		M_{2max}
		$n_2 \cdot h$	$n_2 \cdot h$	$n_2 \cdot h$	$n_2 \cdot h$	$n_2 \cdot h$	$n_2 \cdot h$							
	1:	10000	25000	50000	100000	500000	1000000	[kW]	[kW]	[min^{-1}]	[min^{-1}]	[Nm]		[Nm]
R2	9.23	2410	2310	2310	2310	2310	1940	35	18	1800	3800	330	4H	5200
	10.9	2970	2810	2810	2650	2570	2090	35	18	1800	3800	330	4H	5200
	13.7	2850	2520	2230	2200	2140	2030	32	18	1800	3800	260	4F	5200
	15.9	2440	2080	1840	1820	1820	1820	23	18	1800	3800	260	4F	5200
	19.2	2000	1750	1650	1650	1650	1500	17.2	18	1800	3800	160	4D	5200
	24.8	1050	900	860	860	860	860	7.0	18	1800	3800	160	4D	5200
R3	25.7	2410	2310	2310	2310	2130	1730	15.0	14	2.000	4.000	160	4D	5200
	31.5	2410	2310	2310	2310	2100	1700	15.0	14	2.000	4.000	100	4B	5200
	37.1	2970	2810	2810	2650	2350	1910	15.0	14	2.000	4.000	100	4B	5200
	42.6	2410	2210	2210	2210	2030	1650	11.6	14	2.000	4.000	100	4B	5200
	46.6	2850	2520	2230	2200	2140	2030	11.2	14	2.000	4.000	100	4B	5200
	50.3	2770	2700	2650	2620	2280	1850	12.2	14	2.000	4.000	100	4B	5200
	54.2	2440	2080	1840	1820	1820	1820	8.1	14	2.000	4.000	100	4B	5200
	63.1	2850	2520	2230	2200	2140	2030	8.7	14	2.000	4.000	100	4B	5200
	73.3	2440	2080	1840	1820	1820	1820	6.2	14	2.000	4.000	50	4A	5200
	78.7	2850	2450	2230	2200	2140	2030	7.1	14	2.000	4.000	50	4A	5200
	91.5	2440	2080	1840	1820	1820	1820	5.2	14	2.000	4.000	50	4A	5200
	114	2300	2080	1840	1820	1820	1820	4.3	14	2.000	4.000	50	4A	5200
R4	129	2970	2810	2810	2650	2390	1940	5.1	12	2.000	4.000	50	4A	5200
	148	2410	2310	2310	2310	2130	1730	3.6	12	2.000	4.000	50	4A	5200
	158	2970	2810	2810	2650	2350	1910	4.3	12	2.000	4.000	50	4A	5200
	185	2410	2310	2310	2310	2130	1730	2.9	12	2.000	4.000	50	4A	5200
	214	2970	2810	2810	2650	2350	1910	3.2	12	2.000	4.000	50	4A	5200
	231	2440	2080	1840	1820	1820	1820	2.4	12	2.000	4.000	50	4A	5200
	255	2440	2080	1840	1820	1820	1820	2.1	12	2.000	4.000	50	4A	5200
	290	2770	2700	2650	2620	2280	1850	2.2	12	2.000	4.000	50	4A	5200
	313	2440	2080	1840	1820	1820	1820	1.7	12	2.000	4.000	50	4A	5200
	336	2850	2520	2230	2200	2140	2030	2.0	12	2.000	4.000	50	4A	5200
	364	2850	2520	2230	2200	2140	2030	1.9	12	2.000	4.000	50	4A	5200
	390	2440	2080	1840	1820	1820	1820	1.4	12	2.000	4.000	50	4A	5200
	452	2250	2250	2250	2250	1830	1800	1.2	12	2.000	4.000	50	4A	5200
	528	2440	2080	1840	1820	1820	1820	1.0	12	2.000	4.000	50	4A	5200
	567	2850	2450	2230	2200	2140	2030	1.2	12	2.000	4.000	50	4A	5200
	659	2440	2080	1840	1820	1820	1820	0.83	12	2.000	4.000	50	4A	5200
	797	2000	1750	1650	1650	1650	1500	0.59	12	2.000	4.000	50	4A	5200
	824	2440	2080	1840	1820	1820	1820	0.66	12	2.000	4.000	50	4A	5200

C

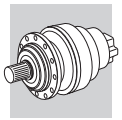

304 R

278

3960 Nm

	i	M_{n2} [Nm]						P_1	Pt	n_1	n_{1max}	M_b		M_{2max}
		$n_2 \cdot h$	$n_2 \cdot h$	$n_2 \cdot h$	$n_2 \cdot h$	$n_2 \cdot h$	$n_2 \cdot h$							
	1:	10000	25000	50000	100000	500000	1000000	[kW]	[kW]	[min-1]	[min-1]	[Nm]		[Nm]
R2	9.23	3710	3520	3500	3220	2390	1940	35	18	1800	3800	330	4H	6600
	10.9	3960	3750	3690	3540	2680	2180	35	18	1800	3800	330	4H	6600
	13.7	3740	3190	2850	2850	2850	2560	35	18	1800	3800	260	4F	6600
	16.8	3000	2560	2390	2390	2390	2390	28	18	1800	3800	260	4F	6600
R3	25.7	3710	3520	3500	3440	3080	2830	15.0	14	2.000	4.000	160	4D	7300
	31.5	3710	3520	3500	3440	3080	2830	15.0	14	2.000	4.000	100	4B	7300
	37.1	3960	3750	3690	3540	3430	2780	15.0	14	2.000	4.000	100	4B	7300
	42.6	3710	3520	3500	3440	3120	2830	15.0	14	2.000	4.000	100	4B	7300
	46.6	3740	3190	2850	2850	2850	2710	14.2	14	2.000	4.000	100	4B	7300
	50.3	3960	3750	3690	3540	3430	2780	15.0	14	2.000	4.000	100	4B	7300
	63.1	3740	3190	2850	2850	2850	2710	10.9	14	2.000	4.000	100	4B	7300
	78.7	3740	3190	2850	2850	2850	2710	9.0	14	2.000	4.000	100	4B	7300
	97.0	3010	2560	2390	2390	2390	2390	5.9	14	2.000	4.000	50	4A	7300
	121	3010	2560	2390	2390	2390	2390	4.9	14	2.000	4.000	50	4A	7300
R4	89.4	3710	3520	3500	3440	3120	2830	9.4	12	2.000	4.000	50	4A	7300
	109	3710	3520	3500	3440	3120	2830	7.8	12	2.000	4.000	50	4A	7300
	129	3960	3750	3690	3540	3430	2780	7.1	12	2.000	4.000	50	4A	7300
	148	3710	3520	3500	3440	3120	2830	5.9	12	2.000	4.000	50	4A	7300
	158	3960	3750	3690	3540	3430	2780	5.9	12	2.000	4.000	50	4A	7300
	185	3710	3520	3500	3440	3080	2830	4.7	12	2.000	4.000	50	4A	7300
	214	3960	3750	3690	3540	3430	2780	4.4	12	2.000	4.000	50	4A	7300
	227	3710	3520	3500	3440	3120	2830	3.9	12	2.000	4.000	50	4A	7300
	267	3960	3750	3690	3540	3430	2780	3.5	12	2.000	4.000	50	4A	7300
	290	3960	3750	3690	3540	3430	2780	3.2	12	2.000	4.000	50	4A	7300
	307	3710	3520	3500	3440	3120	2830	2.9	12	2.000	4.000	50	4A	7300
	338	3010	2560	2390	2390	2390	2390	1.9	12	2.000	4.000	50	4A	7300
	364	3740	3190	2850	2850	2850	2710	2.3	12	2.000	4.000	50	4A	7300
	414	3010	2560	2390	2390	2390	2390	1.6	12	2.000	4.000	50	4A	7300
	452	3960	3710	3660	3540	3430	2780	2.1	12	2.000	4.000	50	4A	7300
	560	3010	2560	2390	2390	2390	2390	1.2	12	2.000	4.000	50	4A	7300
	699	3010	2560	2390	2390	2390	2390	0.93	12	2.000	4.000	50	4A	7300

305 R

290

5600 Nm

	i	M_{n2} [Nm]						P_1	Pt	n_1	n_{1max}	M_b		M_{2max}
		$n_2 \cdot h$	$n_2 \cdot h$	$n_2 \cdot h$	$n_2 \cdot h$	$n_2 \cdot h$	$n_2 \cdot h$							
	1:	10000	25000	50000	100000	500000	1000000	[kW]	[kW]	[min-1]	[min-1]	[Nm]		[Nm]
R2	9.23	4650	4050	4000	3870	2390	1940	35	18	1800	3800	440	4L	7700
	10.9	5300	4720	4720	4350	2680	2180	35	18	1800	3800	440	4L	7700
	13.7	5600	5040	4470	4280	3150	2560	35	18	1800	3800	440	4L	7700
	15.9	4690	4000	3600	3600	3500	2840	35	18	1800	3800	330	4H	7700
	19.2	3800	3300	3100	3100	3000	2790	32	18	1800	3800	260	4F	7700
R3	25.7	4680	4490	4490	4490	3800	3090	15.0	14	2000	4000	260	4F	8800
	31.5	4700	4490	4490	4490	3750	3040	15.0	14	2000	4000	260	4F	8800
	37.1	5800	5500	5480	5300	4210	3420	15.0	14	2000	4000	260	4F	8800
	42.6	4700	4450	4430	4430	3630	2950	15.0	14	2000	4000	160	4D	8800
	46.6	5600	5040	4470	4400	4280	3490	15.0	14	2000	4000	160	4D	8800
	50.3	5530	5350	5300	5230	4070	3310	15.0	14	2000	4000	160	4D	8800
	54.2	4690	4000	3600	3600	3550	3460	15.0	14	2000	4000	100	4B	8800
	63.1	5600	5040	4470	4400	4280	3490	15.0	14	2000	4000	100	4B	8800
	73.3	4690	4000	3600	3600	3550	3460	12.3	14	2000	4000	100	4B	8800
	78.7	5600	4900	4470	4400	4280	3490	14.3	14	2000	4000	100	4B	8800
	91.5	4690	4000	3600	3600	3550	3460	10.2	14	2000	4000	100	4B	8800
	114	4430	4000	3600	3600	3500	3460	8.6	14	2000	4000	50	4A	8800
R4	129	5800	5480	5480	5300	4270	3470	10.3	12	2000	4000	50	4A	8800
	148	4700	4490	4490	4490	3800	3090	7.4	12	2000	4000	50	4A	8800
	158	5800	5500	5480	5300	4210	3420	8.6	12	2000	4000	50	4A	8800

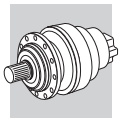

305 R

290

5600 Nm

	i	M_{n2} [Nm]						P_1	Pt	n_1	n_{1max}	M_b		M_{2max}
		$n_2 \cdot h$	$n_2 \cdot h$	$n_2 \cdot h$	$n_2 \cdot h$	$n_2 \cdot h$	$n_2 \cdot h$							
	1:	10000	25000	50000	100000	500000	1000000	[kW]	[kW]	[min^{-1}]	[min^{-1}]	[Nm]		[Nm]
R4	185	4700	4490	4490	4490	3800	3090	6.0	12	2000	4000	50	4A	8800
	214	5800	5500	5480	5300	4210	3420	6.4	12	2000	4000	50	4A	8800
	231	4690	4000	3600	3600	3550	3460	4.7	12	2000	4000	50	4A	8800
	255	4690	4000	3600	3600	3550	3460	4.3	12	2000	4000	50	4A	8800
	290	5530	5400	5300	5230	4070	3310	4.5	12	2000	4000	50	4A	8800
	313	4690	4000	3600	3600	3550	3460	3.5	12	2000	4000	50	4A	8800
	336	5600	5040	4470	4400	4280	3490	3.9	12	2000	4000	50	4A	8800
	364	5600	5040	4470	4400	4280	3490	3.6	12	2000	4000	50	4A	8800
	390	4690	4000	3600	3600	3550	3460	2.8	12	2000	4000	50	4A	8800
	452	4750	4750	4750	4750	3660	3210	2.5	12	2000	4000	50	4A	8800
	528	4690	4000	3600	3600	3550	3460	2.1	12	2000	4000	50	4A	8800
	567	5600	4900	4470	4400	4280	3490	2.3	12	2000	4000	50	4A	8800
	659	4690	4000	3600	3600	3550	3460	1.7	12	2000	4000	50	4A	8800
	797	3800	3300	3100	3100	3000	2790	1.1	12	2000	4000	50	4A	8800
	824	4690	4000	3600	3600	3550	3460	1.3	12	2000	4000	50	4A	8800

306 R

302

7300 Nm

	i	M_{n2} [Nm]						P_1	Pt	n_1	n_{1max}	M_b		M_{2max}
		$n_2 \cdot h$	$n_2 \cdot h$	$n_2 \cdot h$	$n_2 \cdot h$	$n_2 \cdot h$	$n_2 \cdot h$							
	1:	10000	25000	50000	100000	500000	1000000	[kW]	[kW]	[min^{-1}]	[min^{-1}]	[Nm]		[Nm]
R2	9.23	4650	4050	4000	3870	2390	1940	35	18	1800	3800	440	4L	12000
	10.9	5300	4720	4720	4350	2680	2180	35	18	1800	3800	440	4L	12000
	13.7	6500	5920	5920	5100	3150	2560	35	18	1800	3800	440	4L	12000
	15.9	7300	6890	6530	5670	3500	2840	35	18	1800	3800	440	4L	12000
	19.2	7000	5900	5500	5400	3990	3240	35	18	1800	3800	400	4K	12000
R3	33.2	8020	8020	8020	8020	5680	4620	35	14	2000	4000	260	4F	14900
	39.2	9770	9340	9340	9300	6110	4960	35	14	2000	4000	260	4F	14900
	46.3	10420	9850	9850	9600	6860	5570	35	14	2000	4000	260	4F	14900
	58.1	9560	9100	9100	9100	6680	5430	35	14	2000	4000	260	4F	14900
	67.5	7890	7590	7590	7590	6620	5380	25	14	2000	4000	260	4F	14900
	72.9	10080	9350	8300	7950	6810	5530	27	14	2000	4000	160	4D	14900
	84.7	9540	9350	8300	7950	6810	5530	23	14	2000	4000	160	4D	14900
	98.5	8630	7370	6530	6500	6460	5480	17.7	14	2000	4000	100	4B	14900
	119	8500	7370	6530	6500	6460	5480	15.2	14	2000	4000	100	4B	14900
	144	7000	5900	5500	5500	5040	5040	10.7	14	2000	4000	100	4B	14900
R4	158	10420	9850	9850	9600	6860	5570	14.9	12	2000	4000	100	4B	14900
	168	8320	7700	7700	7530	5950	4830	11.3	12	2000	4000	100	4B	14900
	181	9450	9450	9450	9450	6970	5660	11.6	12	2000	4000	100	4B	14900
	214	10420	9850	9850	9600	6860	5570	11.1	12	2000	4000	50	4A	14900
	230	7890	7590	7590	7590	6620	5380	7.7	12	2000	4000	50	4A	14900
	249	10080	9350	8300	7950	6810	5530	9.0	12	2000	4000	50	4A	14900
	289	9540	9350	8300	7950	6810	5530	7.6	12	2000	4000	50	4A	14900
	312	7890	7590	7590	7590	6620	5380	5.7	12	2000	4000	50	4A	14900
	389	8500	7590	7590	7590	6620	5380	5.2	12	2000	4000	50	4A	14900
	420	10080	9350	8300	7950	6810	5530	5.4	12	2000	4000	50	4A	14900
	455	8630	7370	6530	6500	6460	5480	4.4	12	2000	4000	50	4A	14900
	488	9540	9350	8300	7950	6810	5530	4.5	12	2000	4000	50	4A	14900
	550	8500	7370	6530	6500	6460	5480	3.7	12	2000	4000	50	4A	14900
	590	9500	8500	7800	7800	6810	5530	3.8	12	2000	4000	50	4A	14900
	665	7000	5900	5500	5500	5040	5040	2.5	12	2000	4000	50	4A	14900
	830	7000	5900	5500	5500	5040	5040	2.0	12	2000	4000	50	4A	14900

C

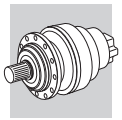

307 R

314

14000 Nm

	i	M_{n2} [Nm]						P_1	Pt	n_1	n_{1max}	M_b		M_{2max}
		$n_2 \cdot h$	$n_2 \cdot h$	$n_2 \cdot h$	$n_2 \cdot h$	$n_2 \cdot h$	$n_2 \cdot h$							
	1:	10000	25000	50000	100000	500000	1000000	[kW]	[kW]	[min-1]	[min-1]	[Nm]		[Nm]
R2	13.0	9000	8500	8270	7960	6570	5340	85	35	1800	3800	1000	5K	18600
	15.5	11400	10690	9630	9520	7440	6040	85	35	1800	3800	1000	5K	21000
	19.8	14000	12700	11300	10790	8850	7190	85	35	1800	3800	800	5G	21000
	23.5	11000	9600	8700	8700	8240	7490	74	35	1800	3800	500	5C	21000
R3	31.6	9000	9000	9000	8300	5490	4460	35	22	2000	4000	400	4K	18600
	37.7	15680	14890	12400	10070	6210	5050	35	22	2000	4000	440	4L	21000
	44.6	15680	14890	13930	11310	6980	5670	35	22	2000	4000	400	4K	21000
	55.9	15680	14890	14890	13260	8180	6650	35	22	2000	4000	330	4H	21000
	65.0	14670	14010	14010	13510	9090	7380	35	22	2000	4000	260	4F	21000
	71.8	14840	12700	11300	10790	9340	7590	35	22	2000	4000	260	4F	21000
	78.6	12300	12300	12300	12300	9560	7770	35	22	2000	4000	260	4F	21000
	83.4	14840	12700	11300	10790	9340	7590	33	22	2000	4000	260	4F	21000
	99.0	11000	9600	8700	8700	8240	7490	23	22	2000	4000	160	4D	21000
	120	11000	9600	8700	8700	8240	7490	19.9	22	2000	4000	160	4D	21000
R4	152	15680	14890	14890	13510	9560	7770	15.0	15	2000	4000	100	4B	21000
	165	14840	12700	11300	10790	9340	7590	15.0	15	2000	4000	100	4B	21000
	191	15680	14890	14890	13510	9560	7770	15.0	15	2000	4000	100	4B	21000
	206	15680	14890	14890	13510	9560	7770	15.0	15	2000	4000	100	4B	21000
	232	14840	12700	11300	10790	9340	7590	14.3	15	2000	4000	100	4B	21000
	258	15680	14890	14890	13510	9560	7770	13.8	15	2000	4000	100	4B	21000
	284	14840	12700	11300	10790	9340	7590	11.6	15	2000	4000	100	4B	21000
	300	15000	14010	14010	13510	9560	7770	11.8	15	2000	4000	100	4B	21000
	331	14840	12700	11300	10790	9340	7590	10.0	15	2000	4000	50	4A	21000
	363	12300	12300	12300	12300	9560	7770	8.0	15	2000	4000	50	4A	21000
	413	14840	12700	11300	10790	9340	7590	8.0	15	2000	4000	50	4A	21000
	453	15000	13800	12900	12500	9560	7770	7.8	15	2000	4000	50	4A	21000
	490	11000	9600	8700	8700	8240	7490	5.3	15	2000	4000	50	4A	21000
	581	14330	12710	11300	10790	9340	7590	5.7	15	2000	4000	50	4A	21000
	690	11000	9600	8700	8700	8240	7490	3.8	15	2000	4000	50	4A	21000

C

309 R

326

16460 Nm

	i	M_{n2} [Nm]						P_1	Pt	n_1	n_{1max}	M_b		M_{2max}
		$n_2 \cdot h$	$n_2 \cdot h$	$n_2 \cdot h$	$n_2 \cdot h$	$n_2 \cdot h$	$n_2 \cdot h$							
	1:	10000	25000	50000	100000	500000	1000000	[kW]	[kW]	[min-1]	[min-1]	[Nm]		[Nm]
R2	13.0	9800	9120	8270	7960	6570	5340	85	35	1800	3800	1000	5K	27400
	15.5	11400	10690	9630	9520	7440	6040	85	35	1800	3800	1000	5K	27400
	19.8	14000	13270	12270	12270	8850	7190	85	35	1800	3800	1000	5K	27400
	23.5	16460	14070	12500	12370	9980	8110	85	35	1800	3800	800	5G	27400
R3	31.6	12800	12310	10960	8900	5490	4460	35	22	2000	4000	440	4L	27900
	37.7	15830	15260	12400	10070	6210	5050	35	22	2000	4000	440	4L	29000
	44.6	18670	17150	13930	11310	6980	5670	35	22	2000	4000	400	4K	29000
	55.9	18510	17140	16330	13260	8180	6650	35	22	2000	4000	400	4K	29000
	65.0	14670	14300	14300	14010	9090	7380	35	22	2000	4000	260	4F	29000
	71.8	21980	19060	16940	15790	9740	7910	35	22	2000	4000	330	4H	29000
	83.4	18300	18100	16940	16190	10830	8790	35	22	2000	4000	260	4F	29000
	99.0	17000	14400	13000	13000	12210	9910	35	22	2000	4000	260	4F	29000
	120	17000	14400	13000	13000	12370	10280	30	22	2000	4000	160	4D	29000
R4	152	21620	21260	21260	18580	11460	9310	15.0	15	2000	4000	160	4D	29000
	165	21980	19060	16940	16190	12810	10410	15.0	15	2000	4000	160	4D	29000
	191	18510	17500	17500	17140	11160	9070	15.0	15	2000	4000	160	4D	29000
	206	21620	21260	21260	18580	11460	9310	15.0	15	2000	4000	160	4D	29000
	232	18300	18100	16940	16190	12810	10410	15.0	15	2000	4000	100	4B	29000
	258	18510	17500	17500	17140	11160	9070	15.0	15	2000	4000	100	4B	29000
	284	18300	18100	16940	16190	12810	10410	15.0	15	2000	4000	100	4B	29000
	331	21980	19060	16940	16190	12810	10410	15.0	15	2000	4000	100	4B	29000
	374	14670	14300	14300	14010	11060	8990	9.2	15	2000	4000	100	4B	29000

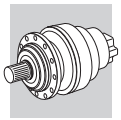

309 R

326

16460 Nm

	i	M_{n2} [Nm]						P_1	Pt	n_1	n_{1max}	M_b		M_{2max}
		$n_2 \cdot h$	$n_2 \cdot h$	$n_2 \cdot h$	$n_2 \cdot h$	$n_2 \cdot h$	$n_2 \cdot h$							
	1:	10000	25000	50000	100000	500000	1000000	[kW]	[kW]	[min-1]	[min-1]	[Nm]		[Nm]
R4	413	21980	19060	16940	16190	12810	10410	12.0	15	2000	4000	100	4B	29000
	457	17000	14400	13000	13000	12370	10280	8.8	15	2000	4000	50	4A	29000
	490	17000	14400	13000	13000	12370	10280	8.2	15	2000	4000	50	4A	29000
	581	15800	15800	15800	15000	12810	10410	6.4	15	2000	4000	50	4A	29000
	690	17000	14400	13000	13000	12370	10280	5.8	15	2000	4000	50	4A	29000

310 R

338

34120 Nm

	i	M_{n2} [Nm]						P_1	Pt	n_1	n_{1max}	M_b		M_{2max}
		$n_2 \cdot h$	$n_2 \cdot h$	$n_2 \cdot h$	$n_2 \cdot h$	$n_2 \cdot h$	$n_2 \cdot h$							
	1:	10000	25000	50000	100000	500000	1000000	[kW]	[kW]	[min-1]	[min-1]	[Nm]		[Nm]
R2	12.0	28200	27800	25000	21590	13320	10820	130	55	1500	2500	3200	6L	47600
	15.4	30600	26240	23350	21100	13020	10570	130	55	1500	2500	2600	6K	47600
	18.3	26000	21200	18420	18230	12860	10440	130	55	1500	2500	2100	6G	47600
	16.6	34120	32340	26580	21590	13320	10820	130	55	1500	2500	2600	6K	47600
	21.3	30600	26240	23350	21100	13020	10570	130	55	1500	2500	2600	6K	47600
	25.3	26000	21200	18420	18230	12860	10440	119	55	1500	2500	2100	6G	47600
R3	37.7	15830	15260	12400	10070	6210	5050	35	22	1800	3800	440	4L	47600
	44.6	18670	17150	13930	11310	6980	5670	35	22	1800	3800	440	4L	47600
	55.9	23410	20100	16320	13260	8180	6650	35	22	1800	3800	400	4K	47600
	65.0	27110	22330	18140	14730	9090	7380	35	22	1800	3800	400	4K	47600
	71.8	29990	23930	19440	15790	9740	7910	35	22	1800	3800	400	4K	47600
	78.6	21800	21100	20150	16840	10390	8440	35	22	1800	3800	330	4H	47600
	83.4	30600	26240	21600	17550	10830	8790	35	22	1800	3800	400	4K	47600
	99.0	26000	21200	18420	18230	12210	9910	35	22	1800	3800	330	4H	47600
	120	26000	21200	18420	18230	12860	10440	35	22	1800	3800	260	4F	47600
R4	136	34120	32340	26580	21590	13320	10820	35	15	2000	4000	260	4F	47600
	160	34120	32340	26580	21590	13320	10820	35	15	2000	4000	260	4F	47600
	189	34120	32340	26580	21590	13320	10820	35	15	2000	4000	260	4F	47600
	206	30600	26240	23350	21100	13020	10570	34	15	2000	4000	160	4D	47600
	234	34120	32340	26580	21590	13320	10820	25	15	2000	4000	160	4D	47600
	258	30600	26240	23350	21100	13020	10570	27	15	2000	4000	160	4D	47600
	283	34120	32340	26580	21590	13320	10820	19.1	15	2000	4000	100	4B	47600
	305	30600	26240	23350	21100	13020	10570	23	15	2000	4000	100	4B	47600
	334	34120	32340	26580	21590	13320	10820	19.1	15	2000	4000	100	4B	47600
	363	30600	26240	23350	21100	13020	10570	19.1	15	2000	4000	100	4B	47600
	419	34120	31930	26580	21590	13320	10820	16.9	15	2000	4000	100	4B	47600
	454	26000	21200	18420	18230	12860	10440	13.5	15	2000	4000	100	4B	47600
	517	30600	26240	23350	21100	13020	10570	13.5	15	2000	4000	100	4B	47600
	590	21800	21800	21800	20150	13320	10820	8.7	15	2000	4000	50	4A	47600
	639	26000	21200	18420	18230	12860	10440	9.6	15	2000	4000	50	4A	47600
	757	28000	25880	23350	21100	13020	10570	8.8	15	2000	4000	50	4A	47600
	898	26000	21200	18420	18230	12860	10440	6.8	15	2000	4000	50	4A	47600

311 R

350

48330 Nm

	i	M_{n2} [Nm]						P_1	Pt	n_1	n_{1max}	M_b		M_{2max}
		$n_2 \cdot h$	$n_2 \cdot h$	$n_2 \cdot h$	$n_2 \cdot h$	$n_2 \cdot h$	$n_2 \cdot h$							
	1:	10000	25000	50000	100000	500000	1000000	[kW]	[kW]	[min-1]	[min-1]	[Nm]		[Nm]
R2	12.0	28200	27800	25000	24910	15900	12700	150	75	1500	2500	3200	6L	58300
	15.4	35600	33600	31960	30600	18800	15300	150	75	1500	2500	3200	6L	58300
	18.3	34000	29500	27000	27000	18600	15100	150	75	1500	2500	2600	6K	58300
	16.6	48330	42150	34220	27800	17150	13940	150	90	1500	2500	3200	6L	58300
	21.3	45210	39560	35220	30380	18740	15230	150	90	1500	2500	2600	6K	58300
	25.3	34000	29500	27000	26000	18510	15040	150	90	1500	2500	2100	6G	58300

C

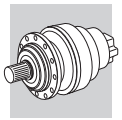

311 R

350

48330 Nm

	i	M_{n2} [Nm]						P_1	Pt	n_1	n_{1max}	M_b		M_{2max}
		$n_2 \cdot h$	$n_2 \cdot h$	$n_2 \cdot h$	$n_2 \cdot h$	$n_2 \cdot h$	$n_2 \cdot h$							
	1:	10000	25000	50000	100000	500000	1000000	[kW]	[kW]	[min-1]	[min-1]	[Nm]		[Nm]
R3	53.0	32500	32430	32440	27690	17090	13880	85	40	2000	4000	800	5G	58300
	63.2	40540	38880	38290	31100	19190	15590	85	40	2000	4000	800	5G	58300
	68.0	41900	39560	35220	30380	18740	15230	85	40	2000	4000	630	5E	58300
	81.1	46930	43390	38290	31100	19190	15590	85	40	2000	4000	630	5E	58300
	96.3	35200	34500	34500	31100	19190	15590	83	40	2000	4000	500	5C	58300
	104	45210	39560	35220	32000	19700	16000	85	40	2000	4000	500	5C	58300
	124	43000	39560	35220	32000	19700	16000	75	40	2000	4000	400	5B	58300
	147	34000	29500	27000	27000	18600	15100	51	40	2000	4000	400	5B	58300
R4	154	48330	39700	32240	26190	16160	13130	35	22	2000	4000	330	4H	58300
	182	48330	44590	36210	29420	18150	14740	35	22	2000	4000	330	4H	58300
	198	46930	43390	38290	31100	19190	15590	35	22	2000	4000	260	4F	58300
	229	48330	45840	38290	31100	19190	15590	35	22	2000	4000	260	4F	58300
	266	48330	45840	38290	31100	19190	15590	35	22	2000	4000	260	4F	58300
	294	46930	43390	38290	31100	19190	15590	35	22	2000	4000	160	4D	58300
	322	48330	45840	38290	31100	19190	15590	33	22	2000	4000	160	4D	58300
	341	46930	43390	38290	31100	19190	15590	31	22	2000	4000	160	4D	58300
	413	46930	43390	38290	31100	19190	15590	25	22	2000	4000	160	4D	58300
	438	45210	39560	35220	32000	19700	16000	23	22	2000	4000	100	4D	58300
	490	35200	34500	34500	31100	19190	15590	17.0	22	2000	4000	100	4B	58300
	520	43000	39560	35220	32000	19700	16000	19.6	22	2000	4000	100	4B	58300
	629	43000	39560	35220	32000	19700	16000	16.2	22	2000	4000	100	4B	58300
	746	34000	29500	27000	27000	18600	15100	10.8	22	2000	4000	100	4B	58300

C

313 R

362

57970 Nm

	i	M_{n2} [Nm]						P_1	Pt	n_1	n_{1max}	M_b		M_{2max}
		$n_2 \cdot h$	$n_2 \cdot h$	$n_2 \cdot h$	$n_2 \cdot h$	$n_2 \cdot h$	$n_2 \cdot h$							
	1:	10000	25000	50000	100000	500000	1000000	[kW]	[kW]	[min-1]	[min-1]	[Nm]		[Nm]
R2	12.2	28500	28100	25300	25130	16100	12900	150	75	1500	2500	3200	6L	86300
	15.9	36700	35600	32870	31400	18900	15500	150	75	1500	2500	3200	6L	86300
	19.1	44100	41000	37800	36000	22100	17700	150	75	1500	2500	3200	6L	86300
	16.8	53340	42520	34530	28050	17310	14060	150	90	1500	2500	3200	6L	105000
	22.0	57970	49730	41580	33760	20830	16920	150	90	1500	2500	2600	6K	105000
	26.4	49000	41000	33100	31730	23730	19270	150	90	1500	2500	2600	6K	105000
R3	53.7	35120	32860	32860	27940	17240	14000	85	40	1800	3800	800	5G	105000
	64.0	40990	39380	38920	31620	19510	15850	85	40	1800	3800	800	5G	105000
	69.9	44280	43120	41410	33630	20750	16860	85	40	1800	3800	800	5G	105000
	82.2	51000	50890	46350	37650	23230	18870	85	40	1800	3800	630	5E	105000
	97.5	52430	50280	50280	42440	26190	21270	85	40	1800	3800	630	5E	105000
	107	57970	49730	44600	42590	27200	22090	85	40	1800	3800	630	5E	105000
	127	57970	49730	45000	42590	27200	22090	85	40	1800	3800	500	5C	105000
	153	49000	42400	39000	39000	27700	22500	65	40	1800	3800	400	5B	105000
R4	185	55410	44980	36540	29680	18310	14870	35	22	2000	4000	330	4H	105000
	201	55410	47690	38730	31460	19410	15770	35	22	2000	4000	330	4H	105000
	237	55410	52510	43510	35340	21810	17710	35	22	2000	4000	260	4F	105000
	281	53000	50280	49050	39840	24580	19970	35	22	2000	4000	260	4F	105000
	309	57970	49730	44290	42550	26250	21320	35	22	2000	4000	260	4F	105000
	346	55410	55000	52510	45210	27900	22660	35	22	2000	4000	260	4F	105000
	387	57970	49730	45000	42590	27200	22090	34	22	2000	4000	160	4D	105000
	450	57970	49730	45000	45000	27800	22600	29	22	2000	4000	160	4D	105000
	496	53000	52000	52200	45210	27900	22660	25	22	2000	4000	160	4D	105000
	535	57970	49730	45000	45000	27800	22600	24	22	2000	4000	160	4D	105000
	647	57970	49730	45000	45000	27800	22600	20	22	2000	4000	100	4B	105000
	778	49000	42400	39000	39000	27700	22500	14.9	22	2000	4000	100	4B	105000

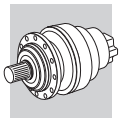

314 R

374

84000 Nm

	i	M_{n2} [Nm]						P_1	Pt	n_1	n_{1max}	M_b		M_{2max}
		$n_2 \cdot h$	$n_2 \cdot h$	$n_2 \cdot h$	$n_2 \cdot h$	$n_2 \cdot h$	$n_2 \cdot h$							
	1:	10000	25000	50000	100000	500000	1000000	[kW]	[kW]	[min-1]	[min-1]	[Nm]		[Nm]
R3	51.1	81840	78152	66080	53208	32832	26680	130	55	1500	2500	3200	6L	115000
	65.5	84000	80000	77600	64640	38800	30720	130	55	1500	2500	3200	6L	115000
	77.8	84000	80000	77600	62400	39040	31520	130	55	1500	2500	2600	6K	115000
	82.3	79200	69600	65464	62400	39040	31760	130	55	1500	2500	2600	6K	115000
	97.6	79200	69600	65464	62400	39040	31760	130	55	1500	2500	2100	6G	115000
	113	66792	57416	52000	52000	32800	26640	94	55	1500	2500	2100	6G	115000
	70.7	83176	78144	67784	55056	33968	27592	130	55	1500	2500	3200	6L	115000
	90.7	84000	78144	67784	55056	33968	27592	130	55	1500	2500	3200	6L	115000
	108	84000	80000	67784	55056	33968	27592	100	55	1500	2500	2600	6K	115000
	114	79200	69600	65464	56000	35280	29040	117	55	1500	2500	2600	6K	115000
	135	79200	69600	65464	62400	39040	31760	98	55	1500	2500	2100	6G	115000
	157	66792	57416	52000	52000	32800	26640	70	55	1500	2500	2100	6G	115000
R4	160	83176	78144	67784	55056	33968	27592	35	22	1800	3800	440	4L	115000
	189	84000	79200	67784	55056	33968	27592	35	22	1800	3800	440	4L	115000
	238	84000	80000	76000	62400	38320	31120	35	22	1800	3800	400	4K	115000
	276	84000	80000	77600	63200	38960	31680	35	22	1800	3800	400	4K	115000
	354	84000	80000	77600	66400	40800	33360	35	22	1800	3800	400	4K	115000
	421	84000	80000	77600	62400	38720	31440	35	22	1800	3800	330	4H	115000
	445	79200	69600	65464	62400	39040	31760	35	22	1800	3800	400	4K	115000
	528	79200	69600	65464	62400	39040	31760	32	22	1800	3800	330	4H	115000
	614	66792	57416	52000	52000	32800	26640	22	22	1800	3800	260	4F	115000

C

315 R

386

105000 Nm

	i	M_{n2} [Nm]						P_1	Pt	n_1	n_{1max}	M_b		M_{2max}
		$n_2 \cdot h$	$n_2 \cdot h$	$n_2 \cdot h$	$n_2 \cdot h$	$n_2 \cdot h$	$n_2 \cdot h$							
	1:	10000	25000	50000	100000	500000	1000000	[kW]	[kW]	[min-1]	[min-1]	[Nm]		[Nm]
R3	51.1	102300	97690	82600	66510	41040	33350	150	75	1500	2500	2600	6K	135000
	65.5	105000	100000	97000	80800	48500	38400	150	75	1500	2500	2100	6G	135000
	77.8	105000	100000	97000	78000	48800	39400	150	75	1500	2500	2100	6G	135000
	82.3	99000	87000	81830	78000	48800	39700	150	75	1500	2500	1500	6E	135000
	97.6	99000	87000	81830	78000	48800	39700	150	75	1500	2500	1500	6E	135000
	113	83490	71770	65000	65000	41000	33300	118	75	1500	2500	850	6B	135000
	70.7	103970	97680	84730	68820	42460	34490	150	90	1500	2500	2100	6G	135000
	90.7	105000	97680	84730	68820	42460	34490	150	90	1500	2500	1500	6E	135000
	108	105000	100000	84730	68820	42460	34490	150	90	1500	2500	1500	6E	135000
	114	99000	87000	81830	70000	44100	36300	146	90	1500	2500	1100	6C	135000
	135	99000	87000	81830	78000	48800	39700	125	90	1500	2500	1100	6C	135000
	157	83490	71770	65000	65000	41000	33300	88	90	1500	2500	850	6B	135000
R4	225	103970	97680	84730	68820	42460	34490	90	40	1800	3800	500	5C	135000
	269	105000	99000	84730	68820	42460	34490	83	40	1800	3800	500	5C	135000
	345	105000	100000	95000	78000	47900	38900	65	40	1800	3800	400	5B	135000
	409	105000	100000	97000	79000	48700	39600	55	40	1800	3800	400	5B	135000
	525	105000	100000	97000	83000	51000	41700	43	40	1800	3800	400	5B	135000
	623	105000	100000	97000	78000	48400	39300	36	40	1800	3800	400	5B	135000
	659	99000	87000	81830	78000	48800	39700	32	40	1800	3800	400	5B	135000
	782	99000	87000	81830	78000	48800	39700	27	40	1800	3800	400	5B	135000
	909	83490	71770	65000	65000	41000	33300	18.7	40	1800	3800	400	5B	135000

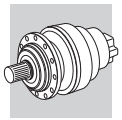

316 R

398

138820 Nm

	i	M_{n2} [Nm]						P_1	Pt	n_1	n_{1max}	M_b		M_{2max}
		$n_2 \cdot h$	$n_2 \cdot h$	$n_2 \cdot h$	$n_2 \cdot h$	$n_2 \cdot h$	$n_2 \cdot h$							
	1:	10000	25000	50000	100000	500000	1000000	[kW]	[kW]	[min^{-1}]	[min^{-1}]	[Nm]		[Nm]
R3	51.1	108000	101000	87200	70300	42300	33900	150	75	1500	2500	2600	6K	192000
	65.5	134000	126000	104000	82600	50000	40200	150	75	1500	2500	2600	6K	192000
	77.8	124000	115000	98650	80130	49440	40500	150	75	1500	2500	2100	6G	192000
	70.7	138810	112590	91410	74250	45820	37220	150	90	1500	2500	2100	6G	192000
	90.7	138820	122980	99890	81130	50060	40660	150	90	1500	2500	2100	6G	192000
	108	124000	108000	98650	80130	49440	40160	150	90	1500	2500	1500	6E	192000
R4	225	138810	126000	103000	83700	51600	42000	85	45	1800	3800	800	5G	192000
	269	138820	126000	103000	83700	51600	42000	85	45	1800	3800	630	5E	192000
	289	138820	126000	107000	85300	53300	42700	85	45	1800	3800	630	5E	192000
	345	138820	126000	103000	83700	51600	42000	83	45	1800	3800	500	5C	192000
	409	138820	125920	103000	83700	51600	42000	69	45	1800	3800	400	5B	192000
	443	138820	126000	107000	85300	53300	42700	65	45	1800	3800	400	5B	192000
	525	138820	122980	103000	83700	51600	42000	54	45	1800	3800	400	5B	192000
	623	124000	115000	98650	80130	49440	40500	42	45	1800	3800	400	5B	192000

C

317 R

408

187860 Nm

	i	M_{n2} [Nm]						P_1	Pt	n_1	n_{1max}	M_b		M_{2max}
		$n_2 \cdot h$	$n_2 \cdot h$	$n_2 \cdot h$	$n_2 \cdot h$	$n_2 \cdot h$	$n_2 \cdot h$							
	1:	10000	25000	50000	100000	500000	1000000	[kW]	[kW]	[min^{-1}]	[min^{-1}]	[Nm]		[Nm]
R3	49.8	108300	99090	80420	65330	40310	32760	150	90	1500	2500	2600	6K	393000
	64.9	134800	119290	96820	78650	48530	39440	150	90	1500	2500	2600	6K	393000
	78.1	151300	138800	115100	92600	55260	45000	150	90	1500	2500	2600	6K	393000
	83.3	165870	148000	120000	96000	58700	46960	150	90	1500	2500	2600	6K	393000
	100	170000	161770	134800	109200	65810	53480	150	90	1500	2500	2100	6G	393000
	119	156150	134380	119950	118760	74300	60290	150	90	1500	2500	1500	6E	393000
	68.9	145590	110540	89790	72940	45010	36570	150	100	1500	2500	2600	6K	393000
	89.8	175270	133080	108100	87810	54180	44020	150	100	1500	2500	2600	6K	393000
	108	137600	127510	123140	99980	61690	50120	150	100	1500	2500	2100	6G	393000
	115	187860	158560	128730	104560	64520	52420	150	100	1500	2500	2100	6G	393000
	139	167000	163960	146640	119060	73470	59690	150	100	1500	2500	1500	6E	393000
	165	156150	134380	119950	118760	79850	64860	141	100	1500	2500	1100	6C	393000
R4	220	136030	110120	89450	72650	44830	36410	90	50	1800	3800	500	5C	393000
	262	163270	124610	101220	82210	50730	41200	90	50	1800	3800	500	5C	393000
	336	195330	148390	120530	97900	60410	49060	90	50	1800	3800	500	5C	393000
	399	207070	167280	135880	110370	68100	55310	90	50	1800	3800	500	5C	393000
	438	184310	171620	141110	114620	70720	57440	87	50	1800	3800	500	5C	393000
	520	184310	171620	141110	114620	70720	57440	73	50	1800	3800	400	5B	393000
	626	155000	155000	144000	117000	72000	59000	53	50	1800	3800	400	5B	393000
	677	170000	163960	154050	131030	80850	65670	53	50	1800	3800	400	5B	393000
	803	170000	163960	154050	131030	80850	65670	45	50	1800	3800	400	5B	393000
	953	156150	134380	119950	118760	79850	64860	32	50	1800	3800	400	5B	393000

318 R

418

280580 Nm

	i	M_{n2} [Nm]						P_1	Pt	n_1	n_{1max}	M_b		M_{2max}
		$n_2 \cdot h$	$n_2 \cdot h$	$n_2 \cdot h$	$n_2 \cdot h$	$n_2 \cdot h$	$n_2 \cdot h$							
	1:	10000	25000	50000	100000	500000	1000000	[kW]	[kW]	[min^{-1}]	[min^{-1}]	[Nm]		[Nm]
R4	225	280580	262990	218310	177320	109410	88870	150	90	1500	2500	1500	6E	500000
	288	280580	262990	218310	177320	109410	88870	150	90	1500	2500	1500	6E	500000
	342	280580	262990	218310	177320	109410	88870	130	90	1500	2500	1100	6C	500000
	362	280580	262990	218310	177320	109410	88870	123	90	1500	2500	1100	6C	500000
	430	280580	262990	218310	177320	109410	88870	103	90	1500	2500	850	6B	500000
	499	280580	262990	218310	177320	109410	88870	87	90	1500	2500	850	6B	500000
	311	280580	262990	218310	177320	109410	88870	143	110	1500	2500	1100	6C	500000

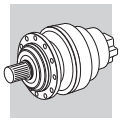

318 R

418

280580 Nm

	i	M_{n2} [Nm]						P_1	Pt	n_1	n_{1max}	M_b		M_{2max}
		$n_2 \cdot h$	$n_2 \cdot h$	$n_2 \cdot h$	$n_2 \cdot h$	$n_2 \cdot h$	$n_2 \cdot h$							
	1:	10000	25000	50000	100000	500000	1000000	[kW]	[kW]	[min-1]	[min-1]	[Nm]		[Nm]
R4	399	280580	262990	218310	177320	109410	88870	111	110	1500	2500	850	6B	500000
	474	280580	262990	218310	177320	109410	88870	94	110	1500	2500	850	6B	500000
	501	280580	262990	218310	177320	109410	88870	89	110	1500	2500	850	6B	500000
	595	280580	262990	218310	177320	109410	88870	75	110	1500	2500	850	6B	500000
	691	280580	262990	218310	177320	109410	88870	63	110	1500	2500	850	6B	500000

319 R

428

403720 Nm

	i	M_{n2} [Nm]						P_1	Pt	n_1	n_{1max}	M_b		M_{2max}
		$n_2 \cdot h$	$n_2 \cdot h$	$n_2 \cdot h$	$n_2 \cdot h$	$n_2 \cdot h$	$n_2 \cdot h$							
	1:	10000	25000	50000	100000	500000	1000000	[kW]	[kW]	[min-1]	[min-1]	[Nm]		[Nm]
R4	249	390680	296370	240760	195590	120710	98100	150	95	1500	2500	2100	6G	680000
	320	403720	345000	283900	226500	136700	112800	150	95	1500	2500	1500	6E	680000
	379	403720	348000	284000	231000	142000	116000	150	95	1500	2500	1500	6E	680000
	401	389910	348000	286000	233000	144000	117000	150	95	1500	2500	1500	6E	680000
	475	367580	317580	270690	248000	153000	124000	127	95	1500	2500	1100	6C	680000
	563	367580	317580	270690	248000	153000	124000	107	95	1500	2500	850	6B	680000
	655	359690	317560	267610	220000	136000	110000	92	95	1500	2500	850	6B	680000
	345	403720	306690	249110	202340	124850	101410	150	115	1500	2500	1100	6C	680000
	442	403720	306690	249110	202340	124850	101410	140	115	1500	2500	1100	6C	680000
	525	403720	306690	249110	202340	124850	101410	118	115	1500	2500	1100	6C	680000
	555	389910	313000	257800	208700	128900	105600	112	115	1500	2500	850	6B	680000
	657	367580	317580	270690	232200	145100	119000	92	115	1500	2500	850	6B	680000
	780	367580	317580	270690	248000	153000	124000	77	115	1500	2500	850	6B	680000
	906	359690	317560	267610	220000	136000	110000	67	115	1500	2500	850	6B	680000

321 R

438

655200 Nm

	i	M_{n2} [Nm]						P_1	Pt	n_1	n_{1max}	M_b		M_{2max}
		$n_2 \cdot h$	$n_2 \cdot h$	$n_2 \cdot h$	$n_2 \cdot h$	$n_2 \cdot h$	$n_2 \cdot h$							
	1:	10000	25000	50000	100000	500000	1000000	[kW]	[kW]	[min-1]	[min-1]	[Nm]		[Nm]
R4	221	374000	281300	226400	181800	111130	90320	150	105	1500	2500	2600	6K	934000
	288	447500	340100	268500	216800	133790	108740	150	105	1500	2500	2100	6G	934000
	347	506300	377100	307000	247800	152340	123900	150	105	1500	2500	2100	6G	934000
	370	528500	402100	317800	264200	159330	129500	150	105	1500	2500	2100	6G	934000
	446	587310	445420	366500	293970	181430	147460	150	105	1500	2500	2100	6G	934000
	529	536350	503040	410200	331430	204550	166260	150	105	1500	2500	1500	6E	934000
	306	401340	304660	247480	201030	124050	100790	150	125	1500	2500	2100	6G	934000
	399	483180	366770	297930	242020	149350	121350	150	125	1500	2500	2100	6G	934000
	481	550170	417600	339230	275560	170050	138170	132	125	1500	2500	1100	6C	934000
	512	575410	436760	354790	288200	177850	144510	125	125	1500	2500	1100	6C	934000
	617	655200	497290	403960	328150	202500	164540	120	125	1500	2500	1100	6C	934000
	732	536360	517290	420170	341290	210580	171050	113	125	1500	2500	850	6B	934000

C

26 DIMENSIONI

300 L

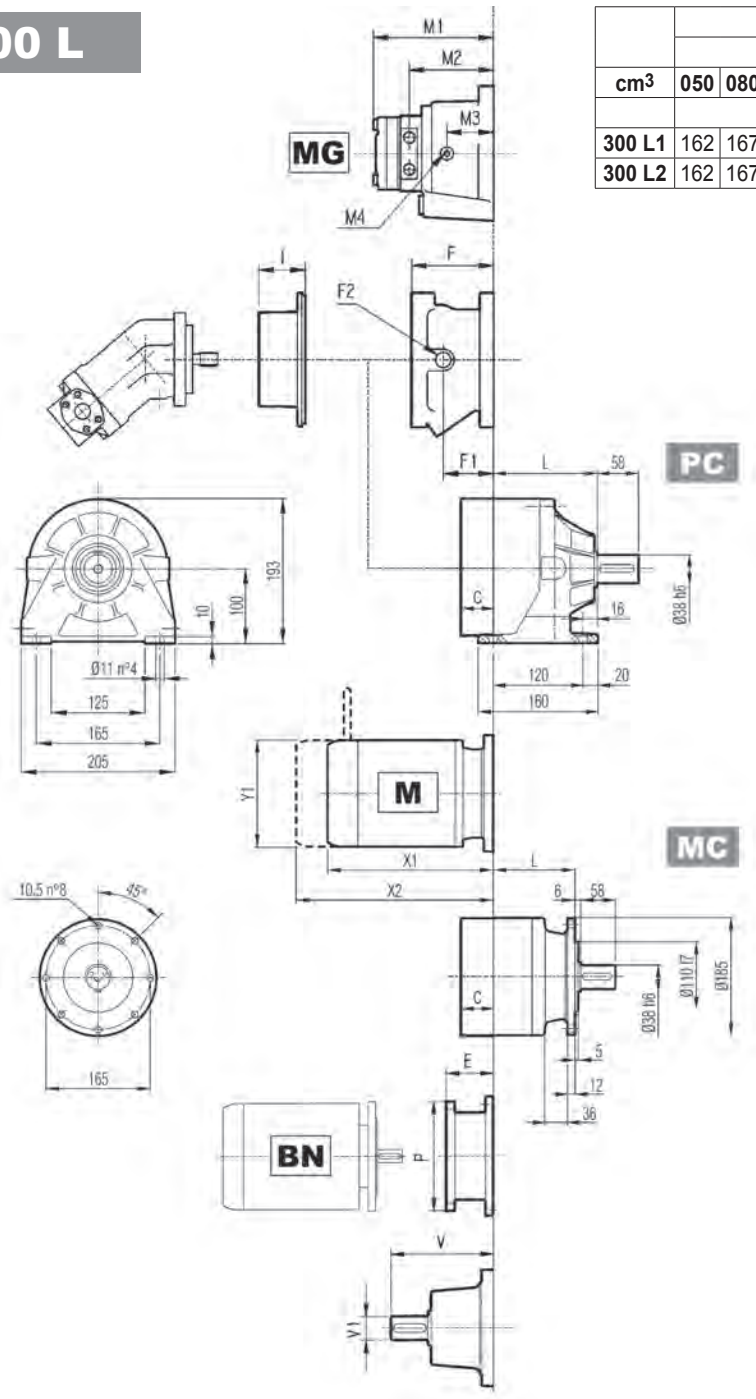

	Hydraulic motor MG							467			Kg
cm³	050	080	100	125	160	200	250				
	M1							M2	M3	M4	
300 L1	162	167	171	175	181	–	–	113	60	1/4G	14
300 L2	162	167	171	–	–	–	–	113	60	1/4G	14

	L				Kg			
	MC - MZ	PC - PZ	HC - HZ	FP - FZ - FDK	MC - MZ	PC - PZ	HC - HZ	FP - FZ - FDK
300 L1	80	86	115	80	18	23	20	16
300 L2	133	139	168	133	22	27	24	20
300 L3	186	192	221	186	26	31	28	24
300 L4	239	245	274	239	30	35	32	28

									I						
	V	V1	Kg	V	V1	Kg	C	Input		F	F1	F2	Type	Input	Kg
300 L1	137.5	24	6	158	38	7	37	A	457	105	65	1/4 G	4	A	10
300 L2	137.5	24	6	158	38	7	37	A		105	65	1/4 G	4	A	10
300 L3	137.5	24	6	158	38	7	37	A		105	65	1/4 G	4	A	10
300 L4	137.5	24	6	158	38	7	37	A		105	65	1/4 G	4	A	10

300 L

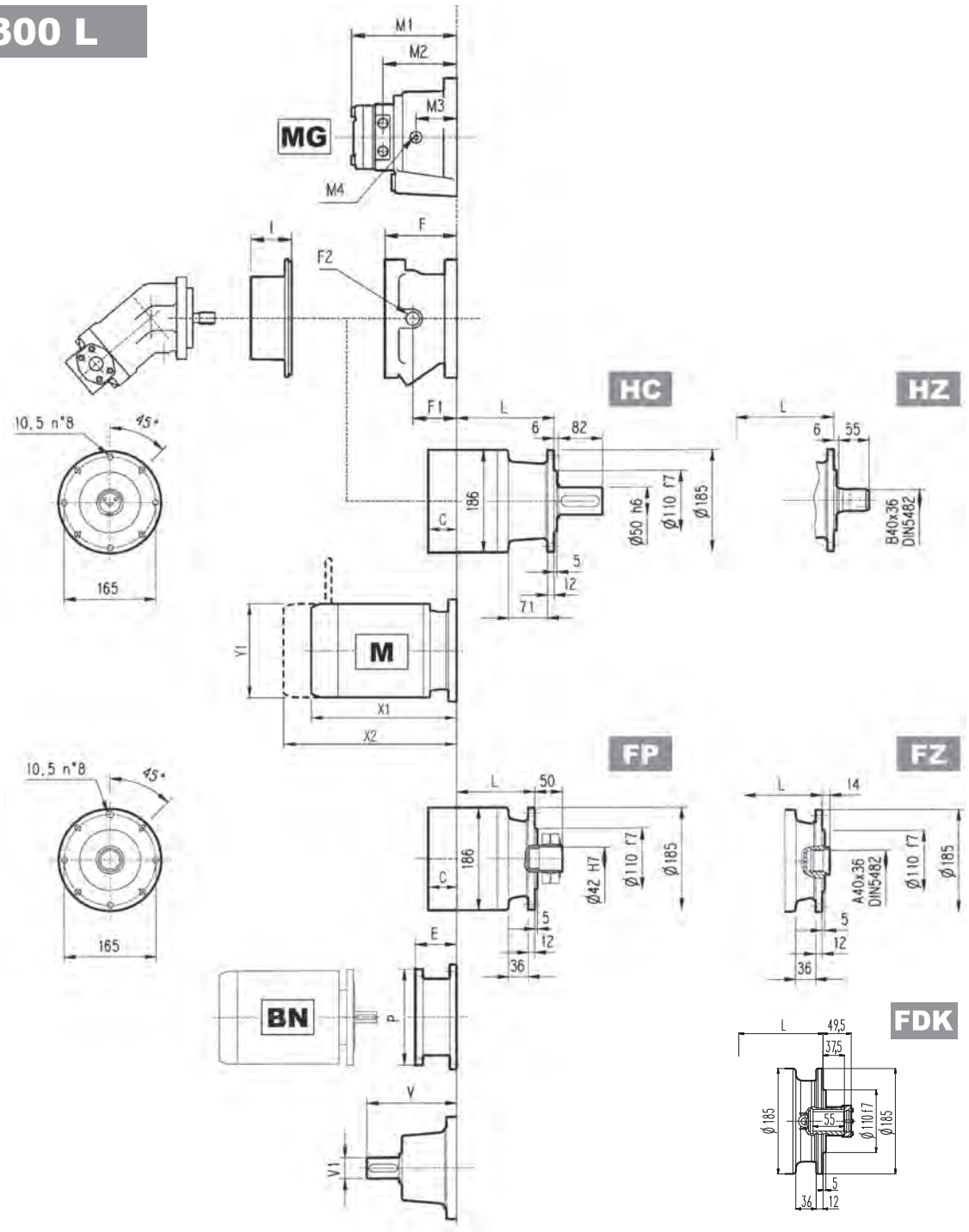

FP M_{2max} = 1300 Nm

	P71		P80		P90		P100		P112		P132	
	E	P	E	P	E	P	E	P	E	P	E	P
300 L1	65	160	84	200	84	200	94	250	94	250	114	300
300 L2	65	160	84	200	84	200	94	250	94	250	114	300
300 L3	65	160	84	200	84	200	94	250	94	250	114	300
300 L4	65	160	84	200	84	200	94	250	94	250	114	300

	S1 + M1			S2 + M2S			S3 + M3S			S3 + M3L			S4 + M4		
	X1	X2	Y1	X1	X2	Y1	X1	X2	Y1	X1	X2	Y1	X1	X2	Y1
300 L1	253	314	138	280	352	156	325	421	195	357	449	195	460	571	258
300 L2	253	314	138	280	352	156	325	421	195	357	449	195	460	571	258
300 L3	253	314	138	280	352	156	325	421	195	357	449	195	460	571	258
300 L4	253	314	138	280	352	156	325	421	195	357	449	195	460	571	258

300 R

	Hydraulic motor							467			Kg
	MG										
cm³	050	080	100	125	160	200	250				
	M1							M2	M3	M4	
300 R2	162	167	171	–	–	–	–	113	60	1/4G	14

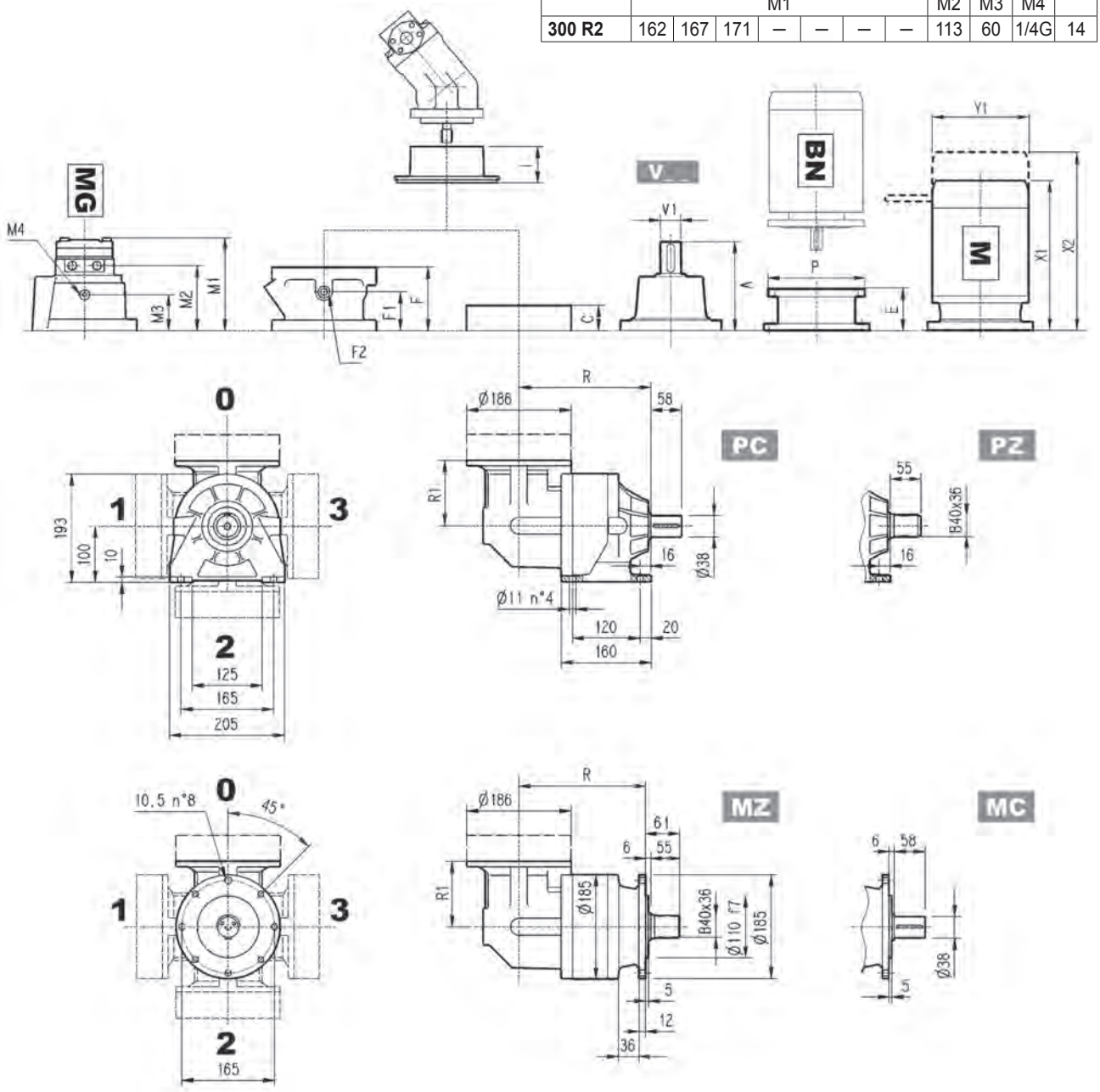

	R				R1	Kg			
	MC - MZ	PC - PZ	HC - HZ	FP - FZ - FDK		MC - MZ	PC - PZ	HC - HZ	FP - FZ - FDK
300 R2	172	178	207	172	122	32	37	34	30
300 R3	225	231	260	225	122	36	41	38	34
300 R4	278	284	313	278	122	40	45	42	38

	V	V1	Kg	V	V1	Kg	C	Input	I	F	F1	F2	Type	Input	Kg
300 R2	137.5	24	6	158	38	7	37	A		105	65	1/4 G	4	A	10
300 R3	137.5	24	6	158	38	7	37	A		105	65	1/4 G	4	A	10
300 R4	137.5	24	6	158	38	7	37	A	457	105	65	1/4 G	4	A	10

300 R

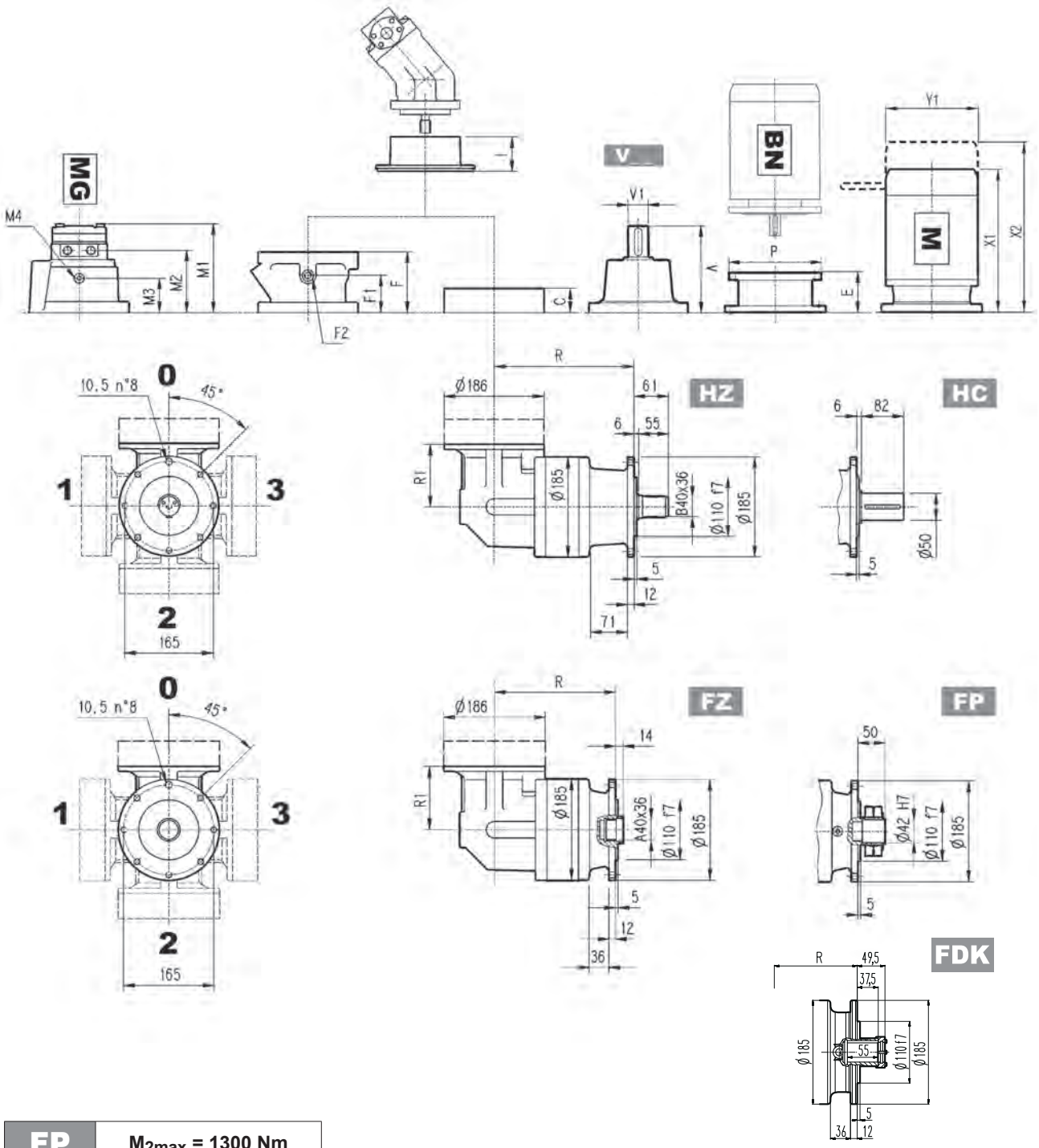

FP M_{2max} = 1300 Nm

	P71		P80		P90		P100		P112		P132	
	E	P	E	P	E	P	E	P	E	P	E	P
300 R2	65	160	84	200	84	200	94	250	94	250	114	300
300 R3	65	160	84	200	84	200	94	250	94	250	114	300
300 R4	65	160	84	200	84	200	94	250	94	250	114	300

	S1 + M1			S2 + M2S			S3 + M3S			S3 + M3L			S4 + M4		
	X1	X2	Y1	X1	X2	Y1	X1	X2	Y1	X1	X2	Y1	X1	X2	Y1
300 R2	253	314	138	328	400	156	373	469	195	405	497	195	508	619	258
300 R3	253	314	138	328	400	156	373	469	195	405	497	195	–	–	–
300 R4	253	314	138	328	400	156	373	469	195	–	–	–	–	–	–

3/V 00 L3

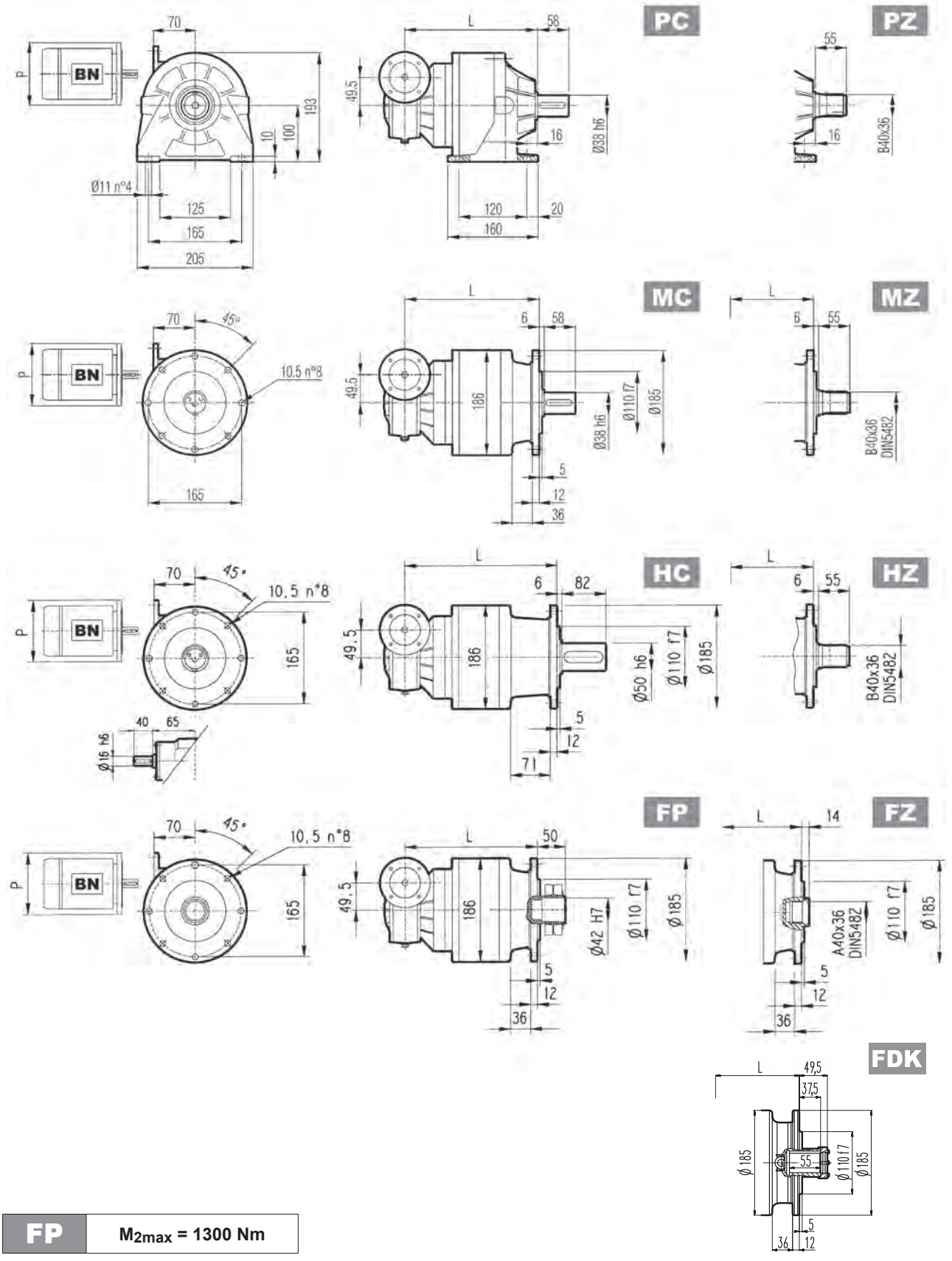

FP	M_{2max} = 1300 Nm

	L				Kg				P63	P71	P80
	MC - MZ	PC - PZ	HC - HZ	FP - FZ - FDK	MC - MZ	PC - PZ	HC - HZ	FP - FZ - FDK	P	P	P
3/V 00 L3	255	261	290	255	25	30	27	23	140	160	200

3/A 00 L2

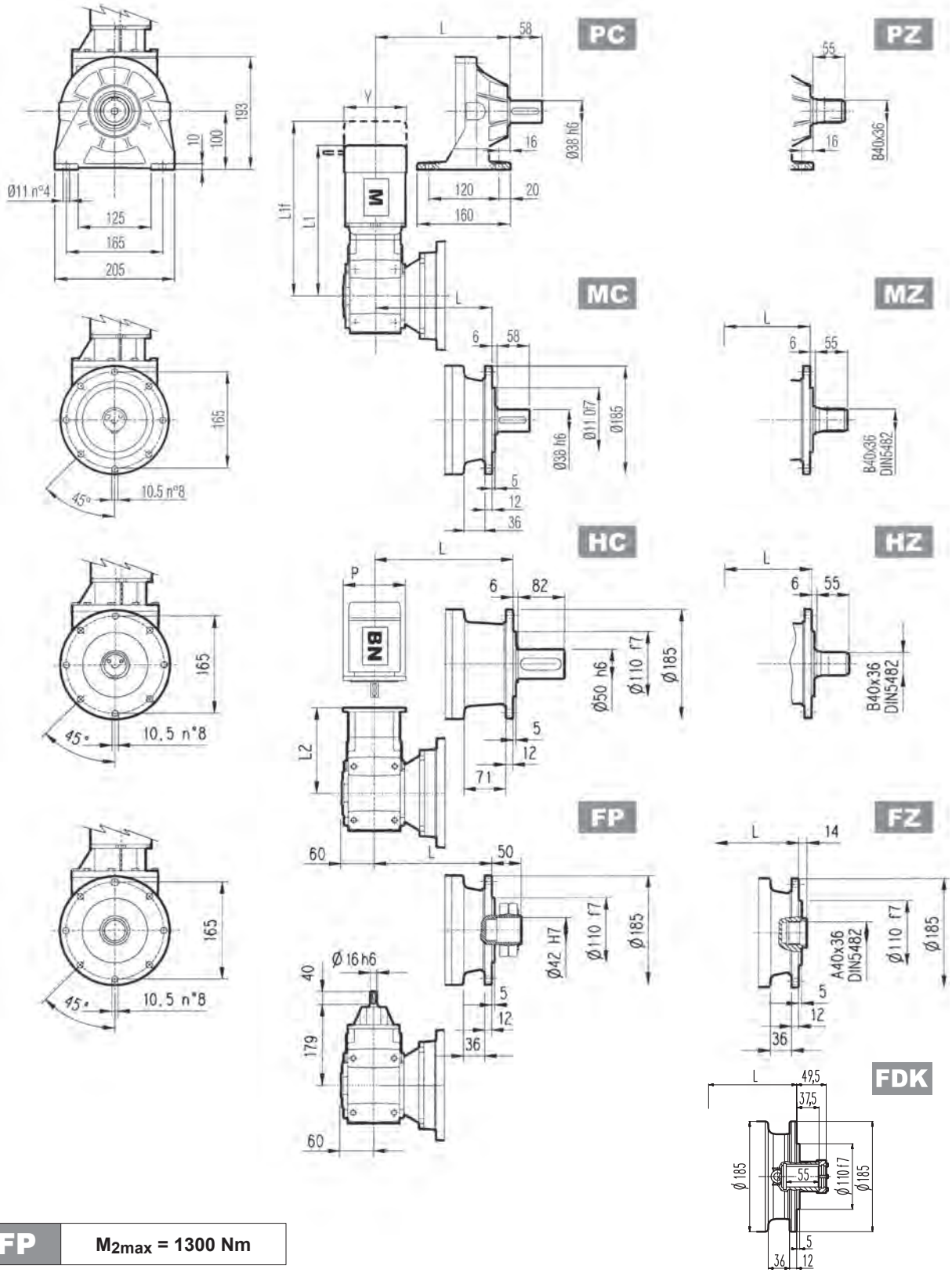

FP	M_{2max} = 1300 Nm

	L				Kg			
	MC - MZ	PC - PZ	HC - HZ	FP - FZ - FDK	MC - MZ	PC - PZ	HC - HZ	FP - FZ - FDK
3/A 00 L2	193	199	228	193	38	43	40	36

	P63		P71		P80		P90		P100		S1 + M1			S2 + M2S			S3 + M3SA			S3 + M3LA		
	L2	P	L2	P	L2	P	L2	P	L2	P	L1	L1f	Y	L1	L1f	Y	L1	L1f	Y	L1	L1f	Y
3/A 00 L2	212.5	140	212.5	160	232	200	232	200	242	250	368	428	138	394	466	156	439	535	195	470	563	195

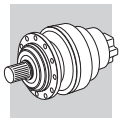

300 L | 300 R | 3/V 00 L3 | 3/A 00 L2

MC

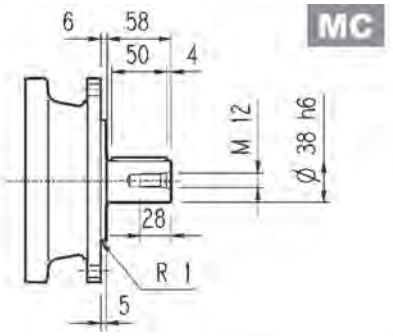

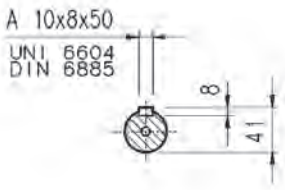

PC

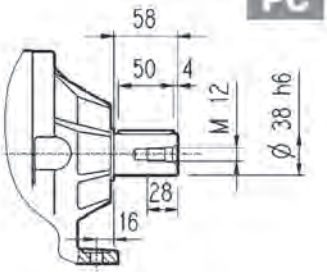

HC

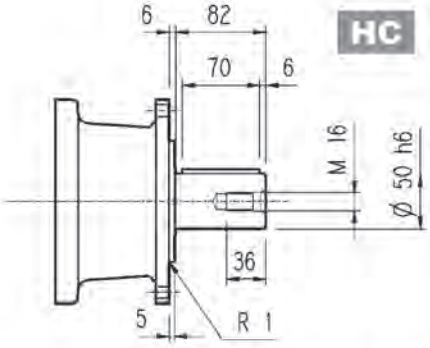

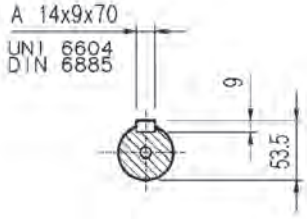

MZ | HZ

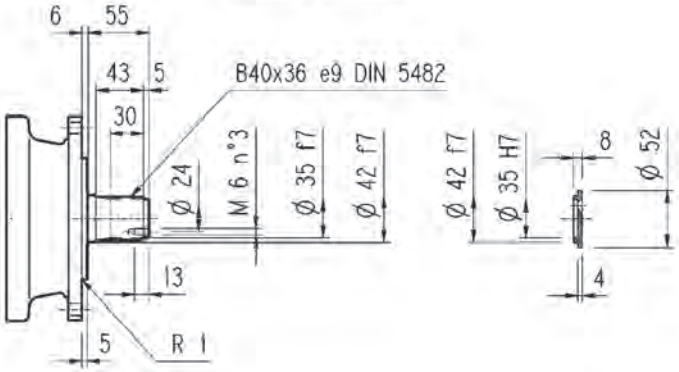

FZ

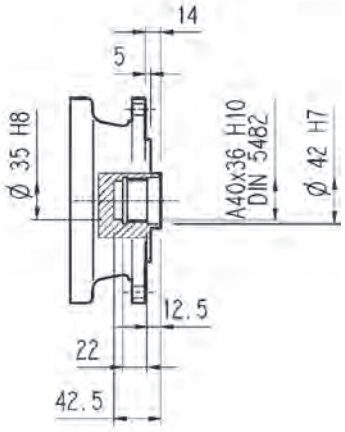

FP

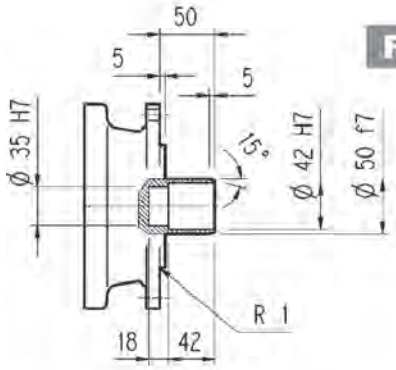

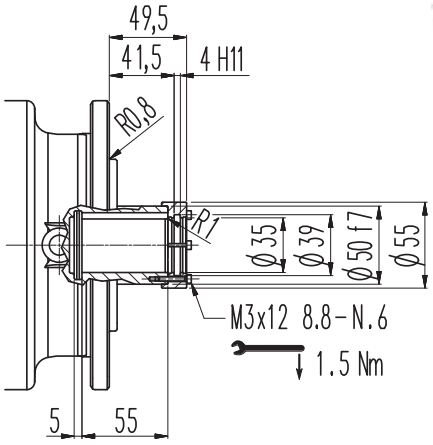

FDK

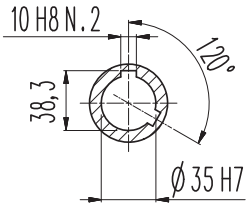

FP	M_{2max} = 1300 Nm

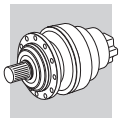

300 L | 300 R | 3/V 00 L3 | 3/A 00 L2

Flange

W0A

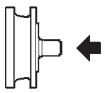

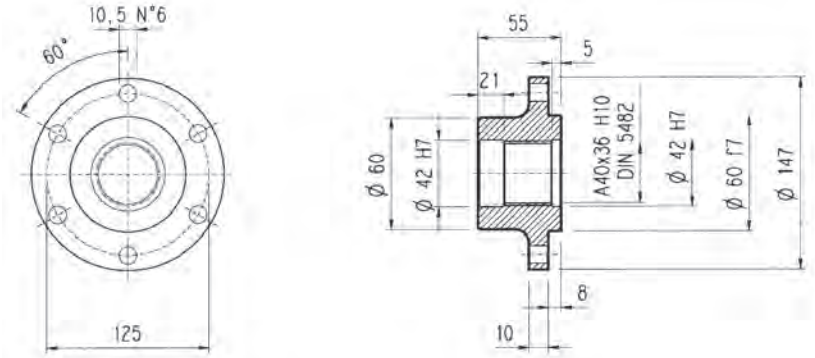

Material: Steel C40

Pinions

P...

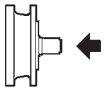

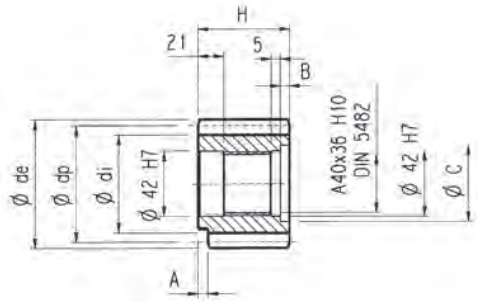

α = 20°

	m	z	x	dp	di	de	H	A	B	C	Material
PBE	4.5	14	0.507	63	56	75.5	55	—	—	—	Steel 39NiCrMo3 hardened and tempered
PCE	5	14	0.500	70	62.5	84.8	65	—	10	53	
PDC	6	12	0.250	72	61	84.8	59	14	4	54	
PDE	6	14	0.500	84	73	99.6	65	—	10	54	

Sleeve coupling

M0A

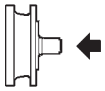

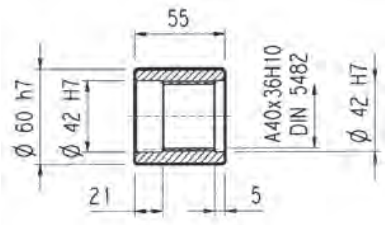

Material: Steel 16CrNi4

Splined bars

B0A

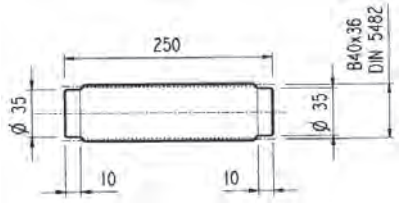

Material: Case hardening steel 18NiCrMo5 UNI 5331
must be case hardened 50-55 HRC

Shrink disc

G0A

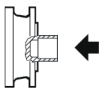

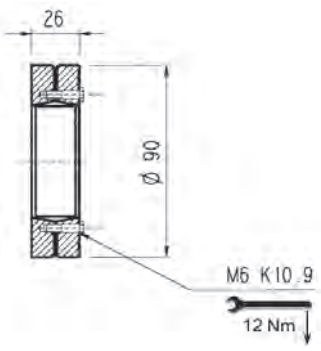

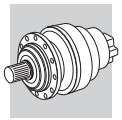

300 L 300 R

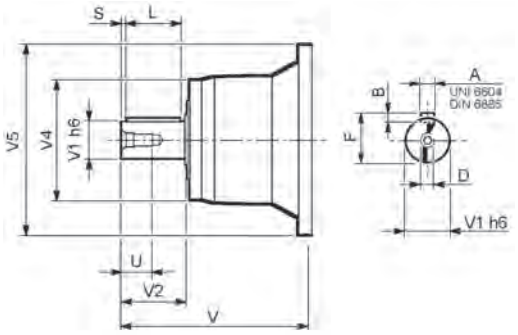

		V	V1	V2	V4	V5	A	B	F	L	S	D	U
300 L1	**V01A**	137.5	24	36	120	186	8	7	27	30	3	M8	19
	V01B	158	38	58	120	186	10	8	41	50	4	M12	28
300 L2	**V01A**	137.5	24	36	120	186	8	7	27	30	3	M8	19
	V01B	158	38	58	120	186	10	8	41	50	4	M12	28
300 L3	**V01A**	137.5	24	36	120	186	8	7	27	30	3	M8	19
	V01B	158	38	58	120	186	10	8	41	50	4	M12	28
300 L4	**V01A**	137.5	24	36	120	186	8	7	27	30	3	M8	19
	V01B	158	38	58	120	186	10	8	41	50	4	M12	28
300 R2-R3-R4	**V01A**	137.5	24	36	120	186	8	7	27	30	3	M8	19
	V01B	158	38	58	120	186	10	8	41	50	4	M12	28

300 L 300 R

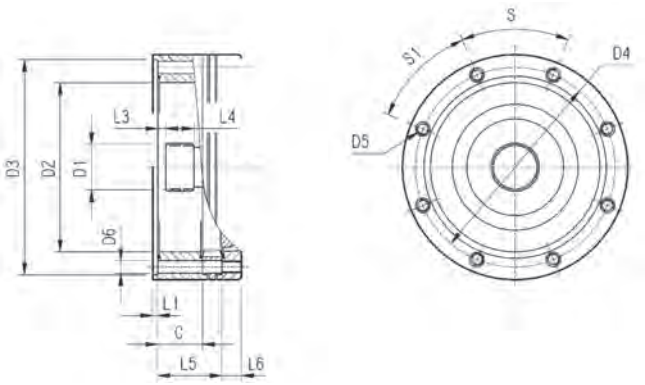

		C	D1	D2	D3	D4	D5	D6	L1	L2	L3	L4	L5	L6	S	S1	Input
300 L1	**V9AA**	37	40x36 DIN5482	140	178 H7	165	M10 n°8	11	4	—	9	18	53	18	45°	45°	A
300 L2	**V9AA**	37	40x36 DIN5482	140	178 H7	165	M10 n°8	11	4	—	9	18	106	18	45°	45°	A
300 L3	**V9AA**	37	40x36 DIN5482	140	178 H7	165	M10 n°8	11	4	—	9	18	159	18	45°	45°	A
300 L4	**V9AA**	37	40x36 DIN5482	140	178 H7	165	M10 n°8	11	4	—	9	18	212	18	45°	45°	A
300 R2-R3-R4	**V9AA**	37	40x36 DIN5482	140	178 H7	165	M10 n°8	11	4	—	9	18	37	18	45°	45°	A

3/V 00 L3

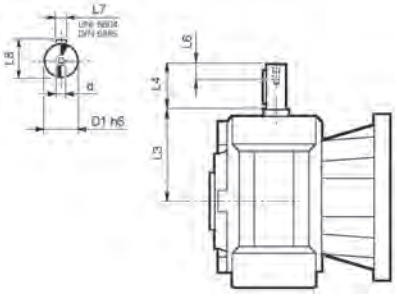

	D1 h6	L3	L4	L6	L7	L8	d
3/V 00 L3_HS	16	65	40	16	5	18	M6

3/A 00 L2

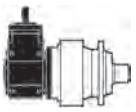

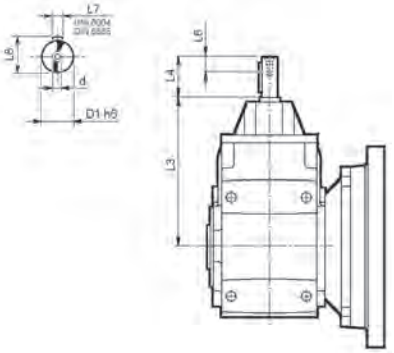

	D1 h6	L3	L4	L6	L7	L8	d
3/A 00 L2_HS	16	179	40	16	5	18	M6

Permissible radial and axial loads on output shaft with $Fh_2 : n_2 \cdot h = 100000$

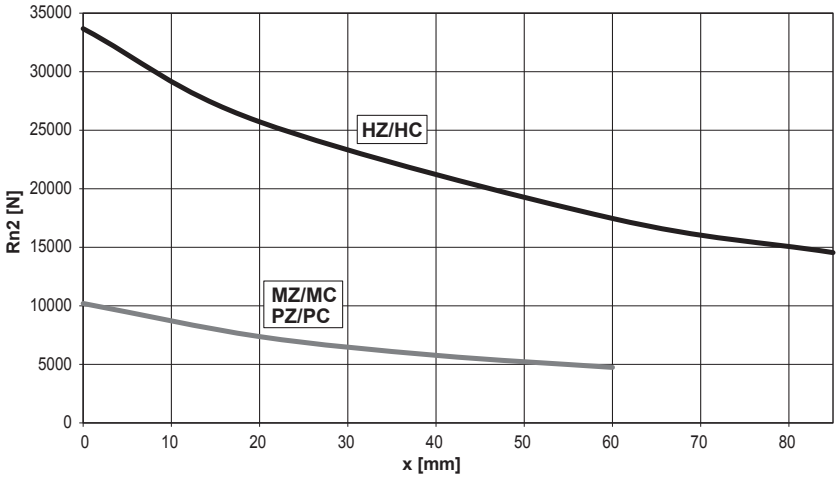

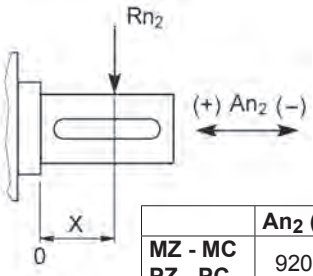

	An2 (+)	An2 (-)
MZ - MC PZ - PC	9200	6900
HZ - HC	20000	20000

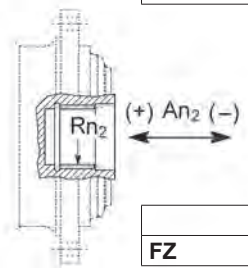

	Rn2	An2 (+/-)
FZ	3713	3713

Load corrective factor fh_2 on shafts	$Fh_2 = n_2 \cdot h$		10000	25000	50000	100000	500000	1000000
	fh_2	FZ	**2.15**	**1.59**	**1.26**	**1.00**	**0.58**	**0.46**
		MZ - MC - PZ - PC	**2.15**	**1.59**	**1.26**	**1.00**	**0.58**	**0.46**
		HZ - HC	**1.27**	**1.27**	**1.26**	**1.00**	**0.62**	**0.50**

Permissible radial loads on input shaft with $Fh_1 : n_1 \cdot h = 250000$

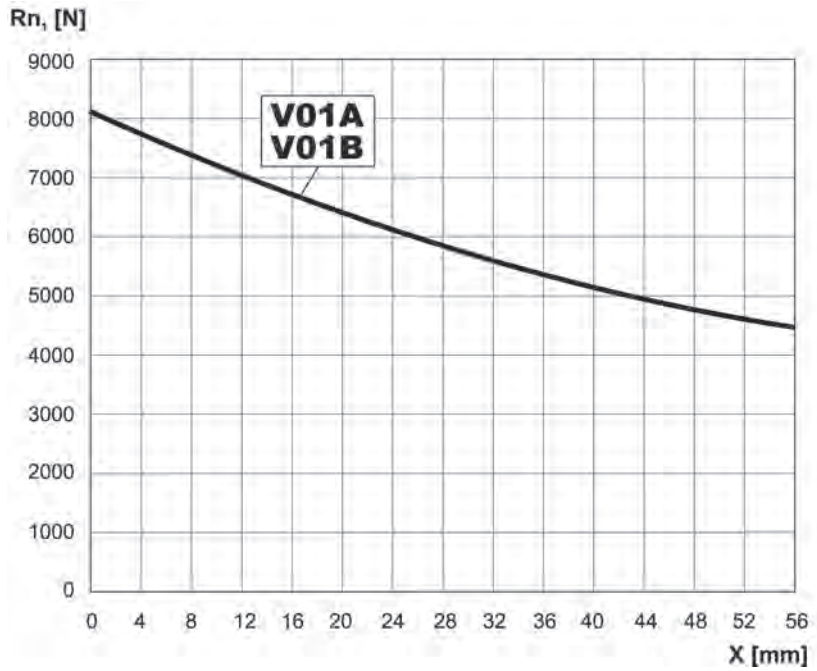

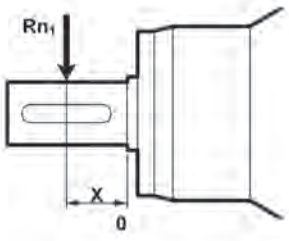

Load corrective factor fh_1 on shafts	$Fh_1 = n_1 \cdot h$	250000	500000	1000000	2000000	5000000	10000000
	fh_1	**1**	**0.79**	**0.63**	**0.50**	**0.37**	**0.29**

301 L

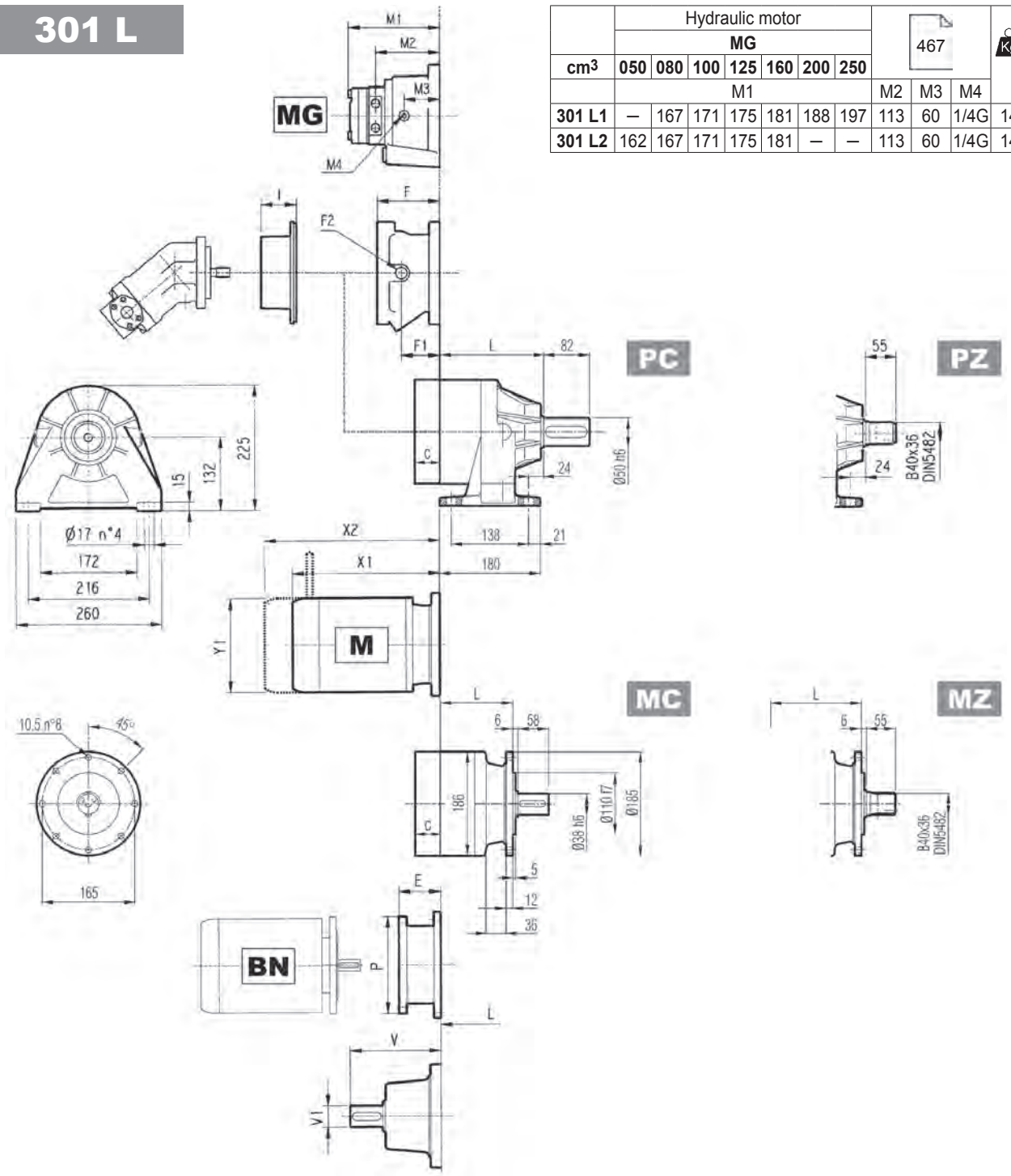

	Hydraulic motor							467			Kg
	MG										
cm³	050	080	100	125	160	200	250				
	M1							M2	M3	M4	
301 L1	–	167	171	175	181	188	197	113	60	1/4G	14
301 L2	162	167	171	175	181	–	–	113	60	1/4G	14

	L				Kg			
	MC - MZ	PC - PZ	HC - HZ	FP - FZ - FDK	MC - MZ	PC - PZ	HC - HZ	FP - FZ - FDK
301 L1	92	132	126	92	21	26	23	19
301 L2	145	185	176	145	25	30	27	23
301 L3	198	238	232	198	29	34	31	27
301 L4	251	291	285	251	33	38	35	31

	V	V1	Kg	V	V1	Kg	C	Input	I	F	F1	F2	Type	Input	Kg
301 L1	137.5	24	6	158	38	7	37	A	457	105	65	1/4 G	4	A	10
301 L2	137.5	24	6	158	38	7	37	A		105	65	1/4 G	4	A	10
301 L3	137.5	24	6	158	38	7	37	A		105	65	1/4 G	4	A	10
301 L4	137.5	24	6	158	38	7	37	A		105	65	1/4 G	4	A	10

301 L

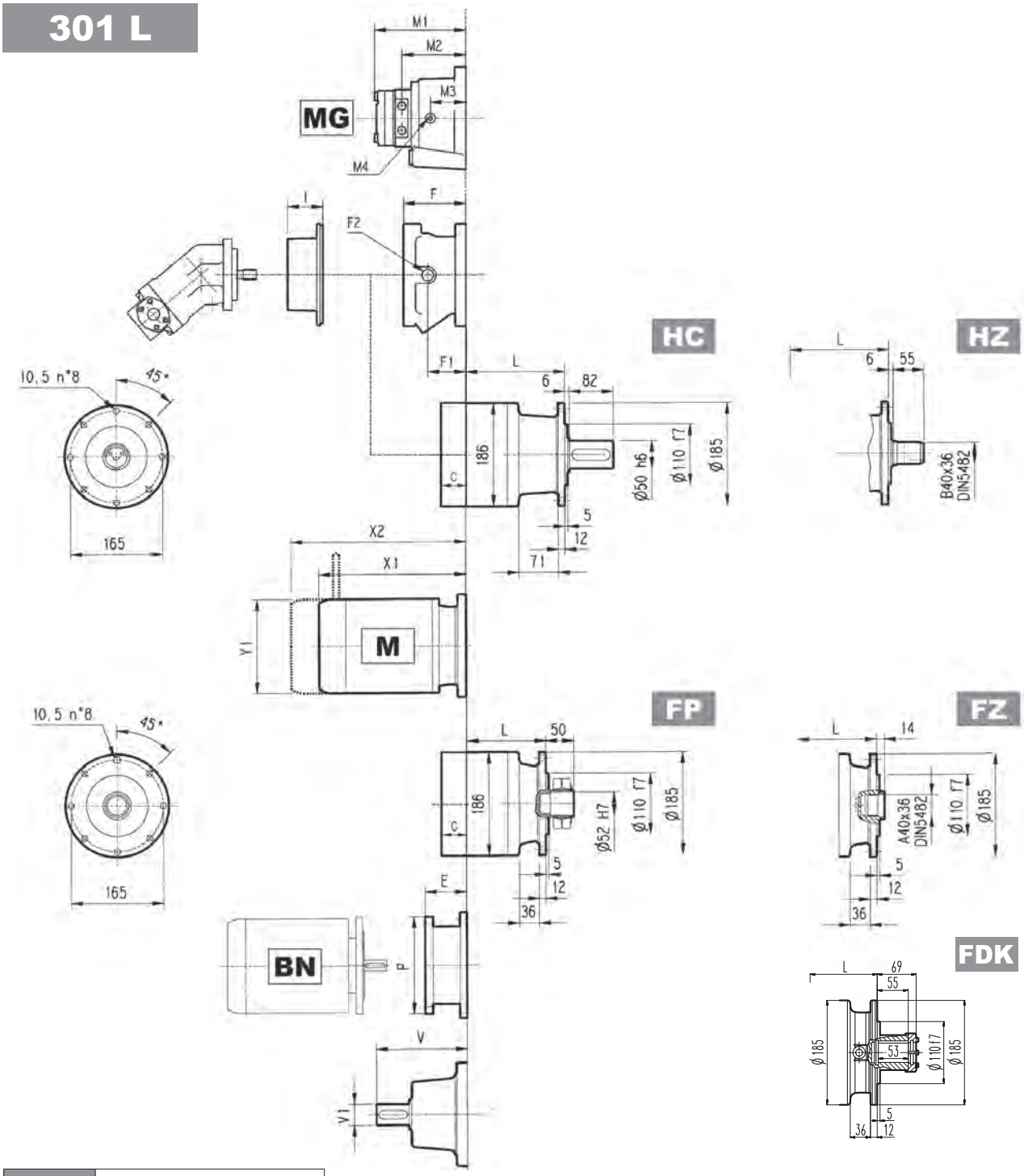

FP M_{2max} = 2400 Nm

	P71		P80		P90		P100		P112		P132	
	E	P	E	P	E	P	E	P	E	P	E	P
301 L1	65	160	84	200	84	200	94	250	94	250	114	300
301 L2	65	160	84	200	84	200	94	250	94	250	114	300
301 L3	65	160	84	200	84	200	94	250	94	250	114	300
301 L4	65	160	84	200	84	200	94	250	94	250	114	300

	S1 + M1			S2 + M2S			S3 + M3S			S3 + M3L			S4 + M4		
	X1	X2	Y1	X1	X2	Y1	X1	X2	Y1	X1	X2	Y1	X1	X2	Y1
301 L1	253	314	138	280	352	156	325	421	195	357	449	195	460	571	258
301 L2	253	314	138	280	352	156	325	421	195	357	449	195	460	571	258
301 L3	253	314	138	280	352	156	325	421	195	357	449	195	460	571	258
301 L4	253	314	138	280	352	156	325	421	195	357	449	195	460	571	258

301 R

	Hydraulic motor							467			Kg
	MG										
cm³	050	080	100	125	160	200	250				
	M1							M2	M3	M4	
301 R2	162	167	171	175	181	–	–	113	60	1/4G	14

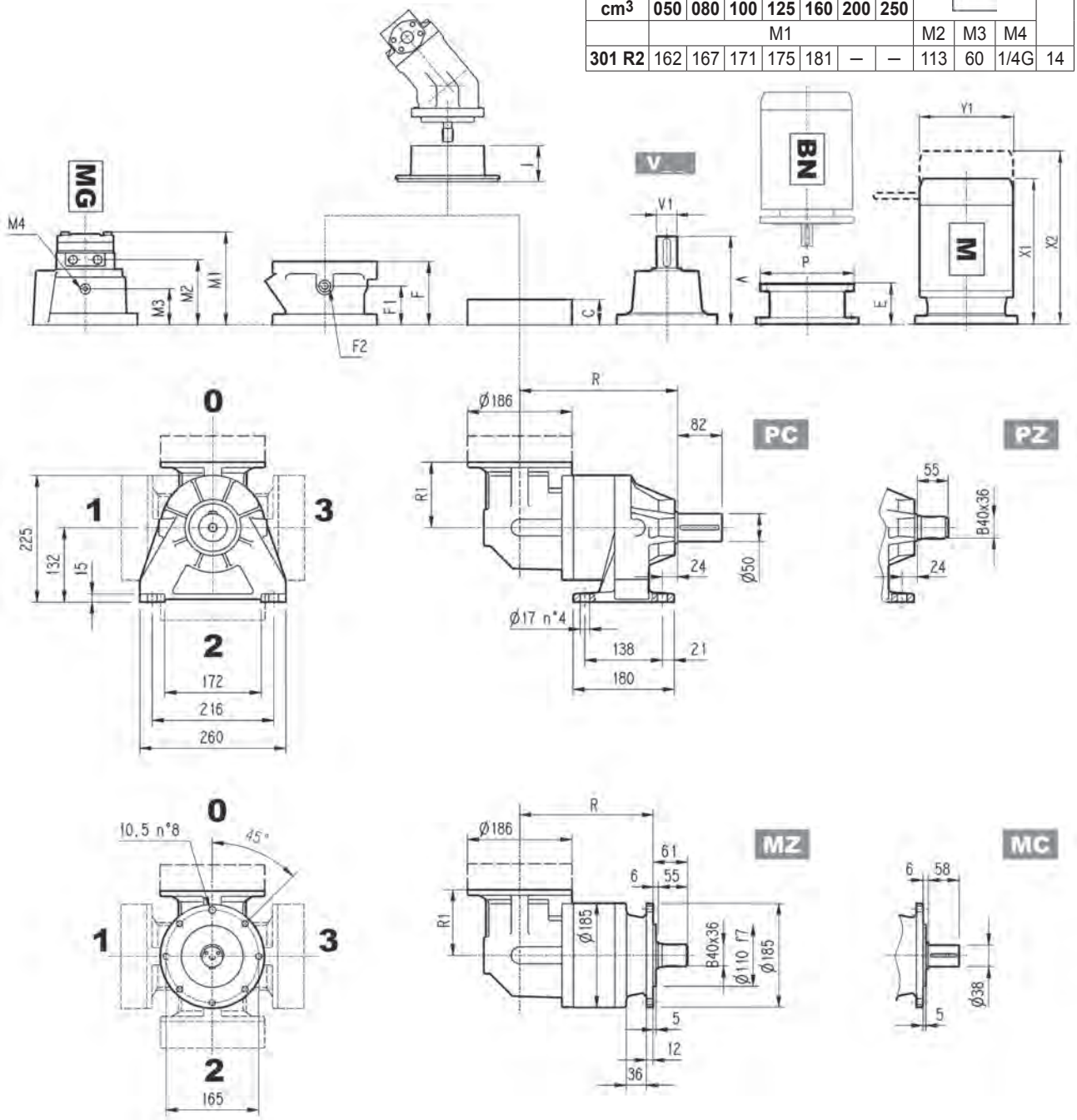

	R				R1	Kg			
	MC - MZ	PC - PZ	HC - HZ	FP - FZ - FDK		MC - MZ	PC - PZ	HC - HZ	FP - FZ - FDK
301 R2	184	225	219	184	122	35	42	37	33
301 R3	237	278	272	237	122	39	46	41	37
301 R4	290	331	325	290	122	43	50	45	41

	V	V1	Kg	V	V1	Kg	C	Input	I	F	F1	F2	Type	Input	Kg
301 R2	137.5	24	6	158	38	7	37	A		105	65	1/4 G	4	A	10
301 R3	137.5	24	6	158	38	7	37	A		105	65	1/4 G	4	A	10
301 R4	137.5	24	6	158	38	7	37	A	457	105	65	1/4 G	4	A	10

301 R

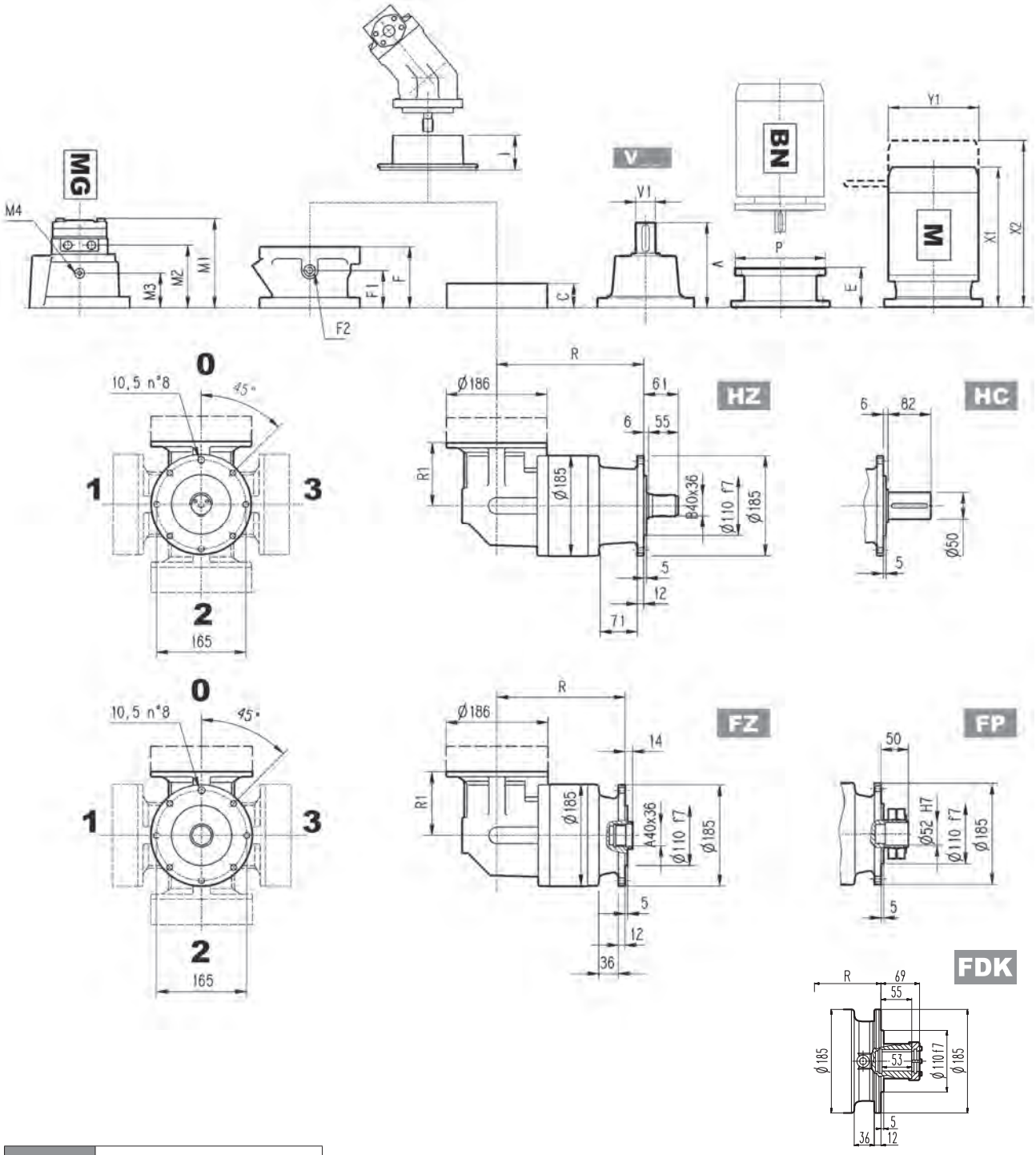

FP M_{2max} = 2400 Nm

	P71		P80		P90		P100		P112		P132	
	E	P	E	P	E	P	E	P	E	P	E	P
301 R2	65	160	84	200	84	200	94	250	94	250	114	300
301 R3	65	160	84	200	84	200	94	250	94	250	114	300
301 R4	65	160	84	200	84	200	94	250	94	250	114	300

	S1 + M1			S2 + M2S			S3 + M3S			S3 + M3L			S4 + M4		
	X1	X2	Y1	X1	X2	Y1	X1	X2	Y1	X1	X2	Y1	X1	X2	Y1
301 R2	253	314	138	328	400	156	373	469	195	405	497	195	508	619	258
301 R3	253	314	138	328	400	156	373	469	195	405	497	195	—	—	—
301 R4	253	314	138	328	400	156	373	469	195	—	—	—	—	—	—

3/V 01 L3

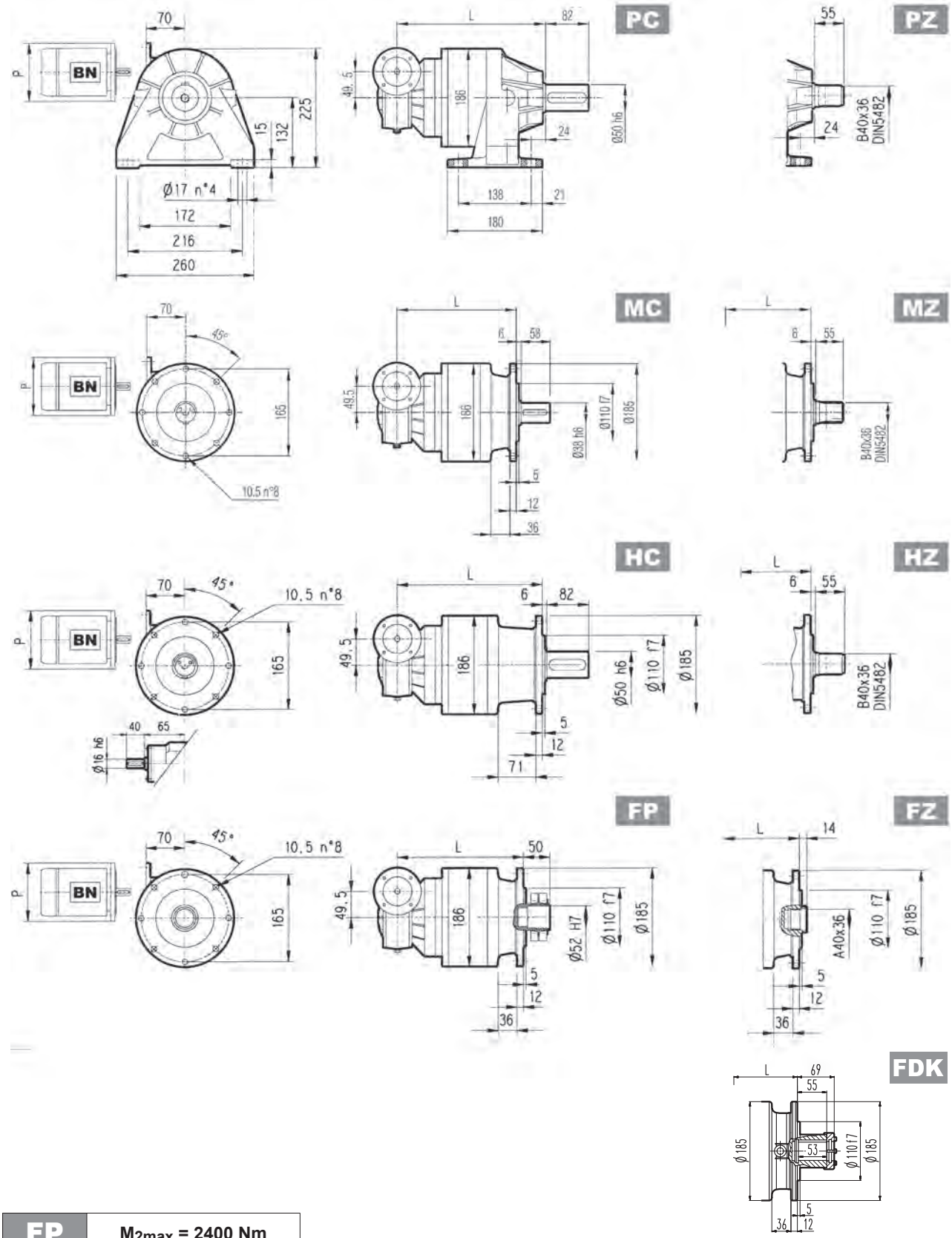

FP | **M_{2max} = 2400 Nm**

	L				Kg				P63	P71	P80
	MC - MZ	PC - PZ	HC - HZ	FP - FZ - FDK	MC - MZ	PC - PZ	HC - HZ	FP - FZ - FDK	P	P	P
3/V 01 L3	267	308	302	267	28	35	30	26	140	160	200

Bonfiglioli Riduttori

3/A 01 L2

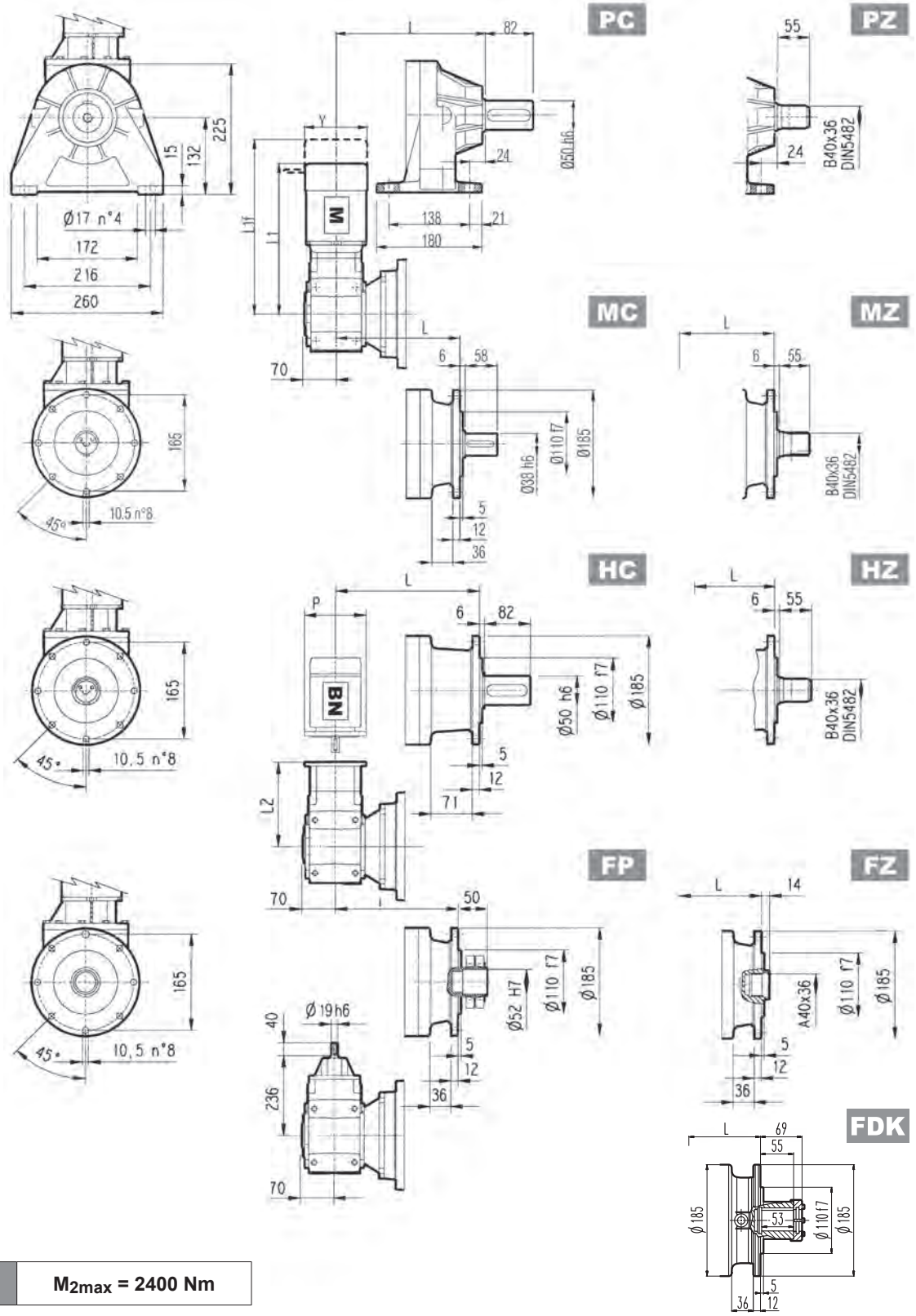

FP M_{2max} = 2400 Nm

	L				Kg			
	MC - MZ	PC - PZ	HC - HZ	FP - FZ - FDK	MC - MZ	PC - PZ	HC - HZ	FP - FZ - FDK
3/A 01 L2	202	208	237	202	40	46	43	40

	P63		P71		P80		P90		P100		S1 + M1			S2 + M2S			S3 + M3SA			S3 + M3LA		
	L2	P	L2	P	L2	P	L2	P	L2	P	L1	L1f	Y	L1	L1f	Y	L1	L1f	Y	L1	L1f	Y
3/A 01 L2	226	140	226	160	245.5	200	245.5	200	255.5	250	382	442	138	408	480	156	453	549	195	484	577	195

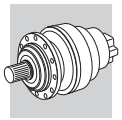

301 L | 301 R | 3/V 01 L3 | 3/A 01 L2

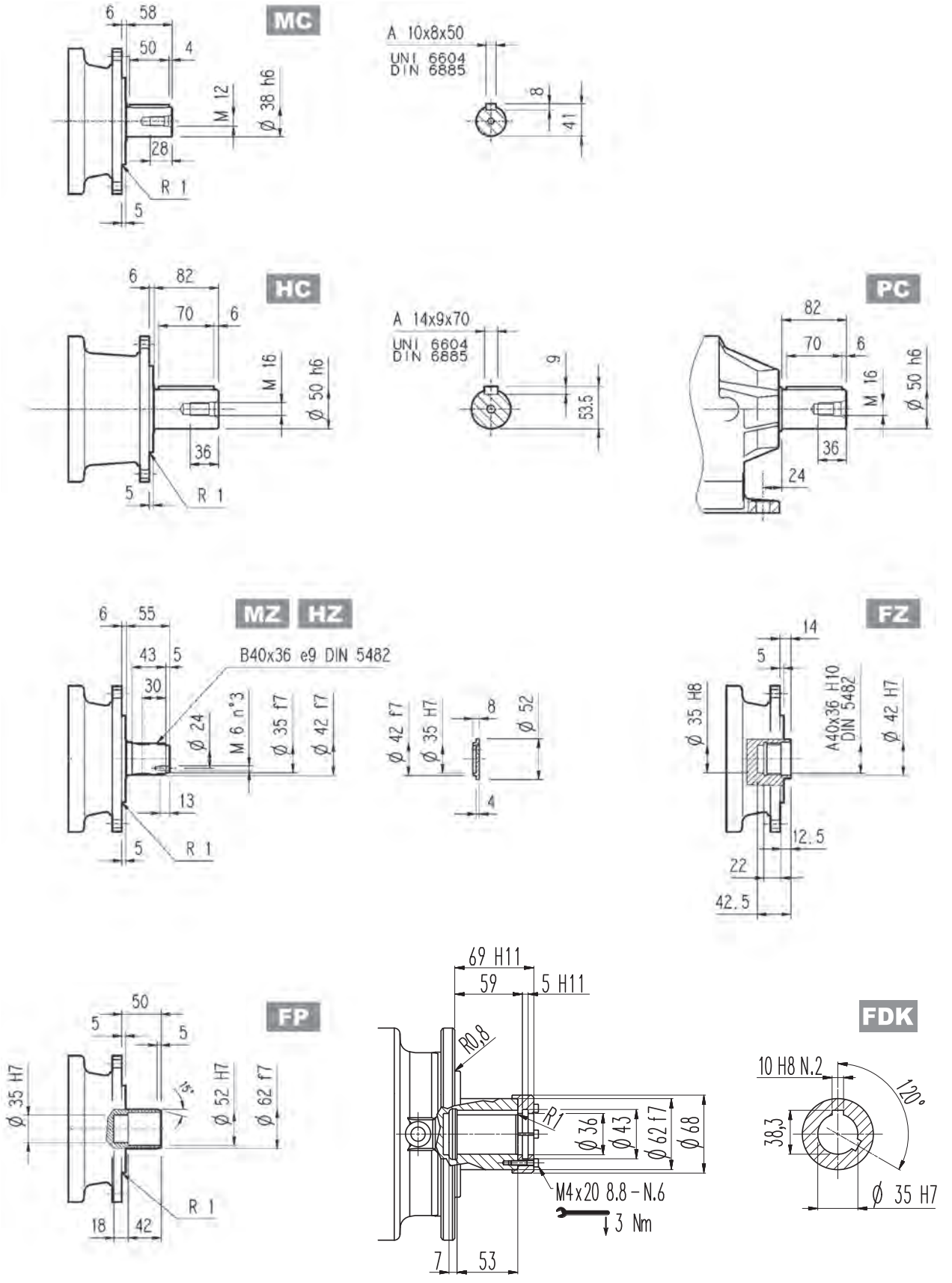

FP	M_{2max} = 2400 Nm

301 L | 301 R | 3/V 01 L3 | 3/A 01 L2

Flange

W0A

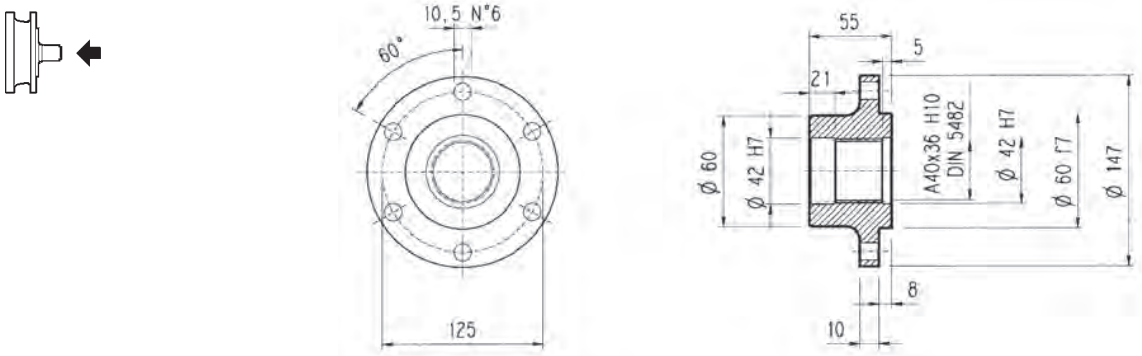

Material: Steel C40

Pinions

P...

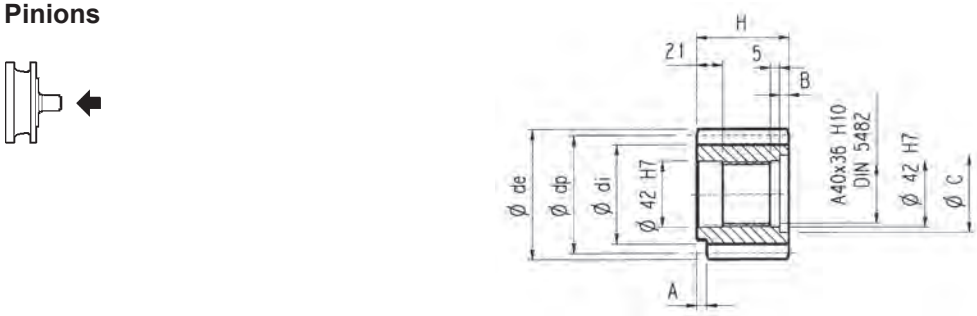

$\alpha = 20°$

	m	z	x	dp	di	de	H	A	B	C	Material
PBE	4.5	14	0.507	63	56	75.5	55	—	—	—	Steel 39NiCrMo3 hardened and tempered
PCE	5	14	0.500	70	62.5	84.8	65	—	10	53	
PDC	6	12	0.250	72	61	84.8	59	14	4	54	
PDE	6	14	0.500	84	73	99.6	65	—	10	54	

Sleeve coupling

M0A

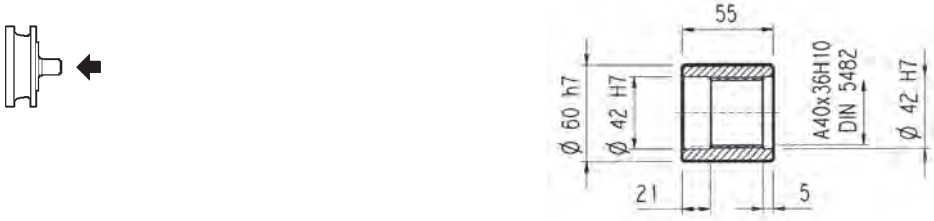

Material: Steel 16CrNi4

Splined bars

B0A

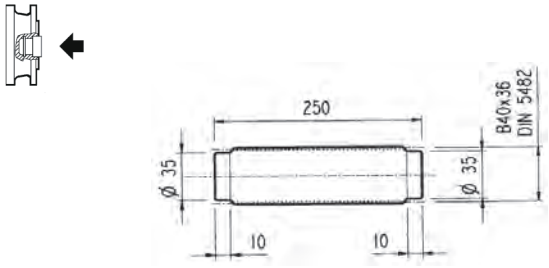

Material: Case hardening steel 18NiCrMo5 UNI 5331
must be case hardened 50-55 HRC

Shrink disc

G0A

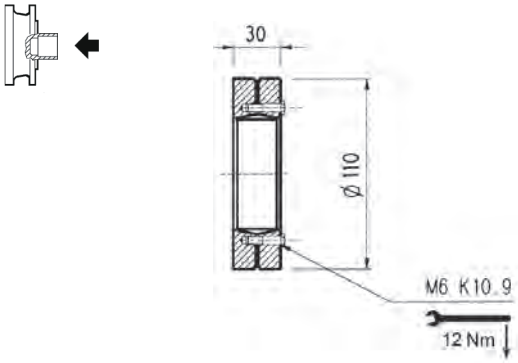

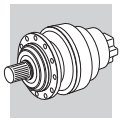

301 L 301 R

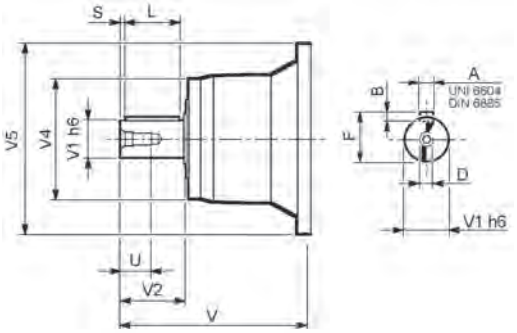

		V	V1	V2	V4	V5	A	B	F	L	S	D	U
301 L1	**V01A**	137.5	24	36	120	186	8	7	27	30	3	M8	19
	V01B	158	38	58	120	186	10	8	41	50	4	M12	28
301 L2	**V01A**	137.5	24	36	120	186	8	7	27	30	3	M8	19
	V01B	158	38	58	120	186	10	8	41	50	4	M12	28
301 L3	**V01A**	137.5	24	36	120	186	8	7	27	30	3	M8	19
	V01B	158	38	58	120	186	10	8	41	50	4	M12	28
301 L4	**V01A**	137.5	24	36	120	186	8	7	27	30	3	M8	19
	V01B	158	38	58	120	186	10	8	41	50	4	M12	28
301 R2-R3-R4	**V01A**	137.5	24	36	120	186	8	7	27	30	3	M8	19
	V01B	158	38	58	120	186	10	8	41	50	4	M12	28

301 L 301 R

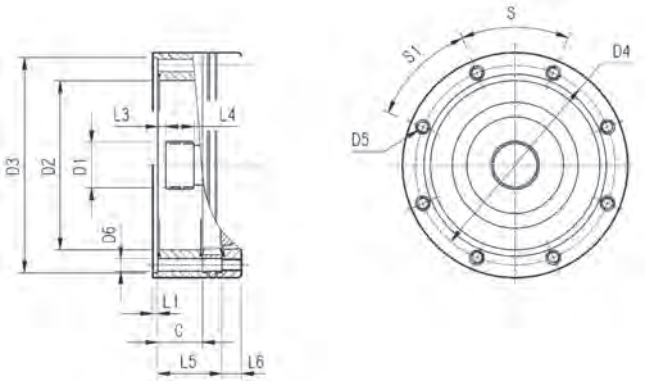

		C	D1	D2	D3	D4	D5	D6	L1	L2	L3	L4	L5	L6	S	S1	Input
301 L1	**V9AA**	37	40x36 DIN5482	140	178 H7	165	M10 n°8	11	4	—	9	18	65	18	45°	45°	A
301 L2	**V9AA**	37	40x36 DIN5482	140	178 H7	165	M10 n°8	11	4	—	9	18	118	18	45°	45°	A
301 L3	**V9AA**	37	40x36 DIN5482	140	178 H7	165	M10 n°8	11	4	—	9	18	171	18	45°	45°	A
301 L4	**V9AA**	37	40x36 DIN5482	140	178 H7	165	M10 n°8	11	4	—	9	18	224	18	45°	45°	A
301 R2-R3-R4	**V9AA**	37	40x36 DIN5482	140	178 H7	165	M10 n°8	11	4	—	9	18	37	18	45°	45°	A

3/V 01 L3

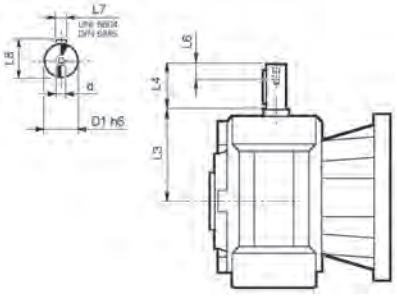

	D1 h6	L3	L4	L6	L7	L8	d
3/V 01 L3_HS	16	65	40	16	5	18	M6

3/A 01 L2

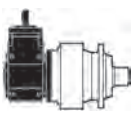

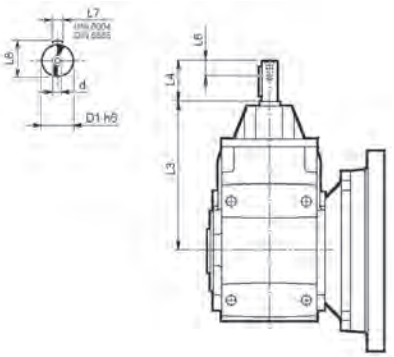

	D1 h6	L3	L4	L6	L7	L8	d
3/A 01 L2_HS	19	235.5	40	16	6	21.5	M6

Bonfiglioli Riduttori

301 L | 301 R | 3/V 01 L3 | 3/A 01 L2

Permissible radial and axial loads on output shaft with $Fh_2 : n_2 \cdot h = 100000$

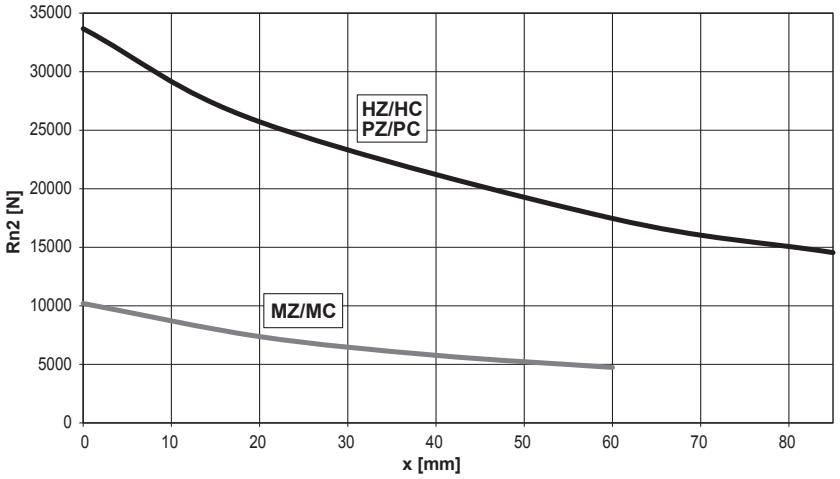

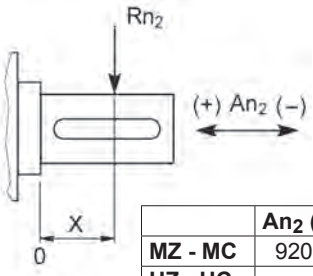

	An2 (+)	An2 (-)
MZ - MC	9200	6900
HZ - HC PZ - PC	20000	20000

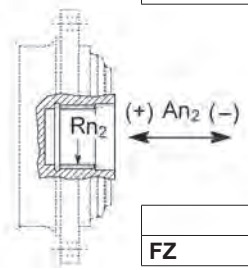

	Rn2	An2 (+/-)
FZ	3713	3713

Load corrective factor fh_2 on shafts	$Fh_2 = n_2 \cdot h$		10000	25000	50000	100000	500000	1000000
	fh_2	FZ	**2.15**	**1.59**	**1.26**	**1.00**	**0.58**	**0.46**
		MZ - MC	**2.15**	**1.59**	**1.26**	**1.00**	**0.58**	**0.46**
		HZ - HC - PZ - PC	**1.27**	**1.27**	**1.26**	**1.00**	**0.62**	**0.50**

Permissible radial loads on input shaft with $Fh_1 : n_1 \cdot h = 250000$

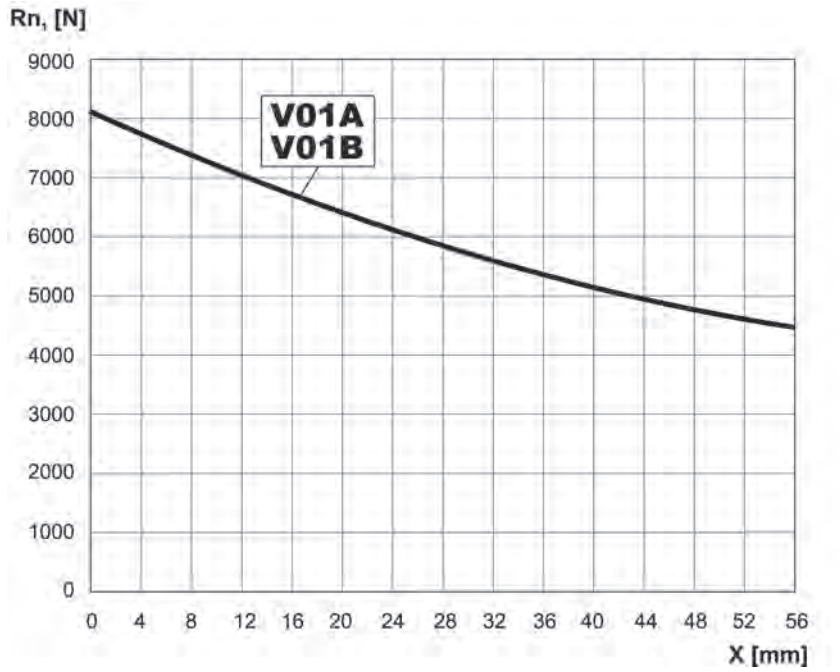

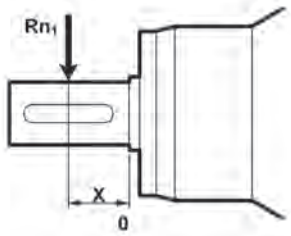

Load corrective factor fh_1 on shafts	$Fh_1 = n_1 \cdot h$	250000	500000	1000000	2000000	5000000	10000000
	fh_1	**1**	**0.79**	**0.63**	**0.50**	**0.37**	**0.29**

303 L

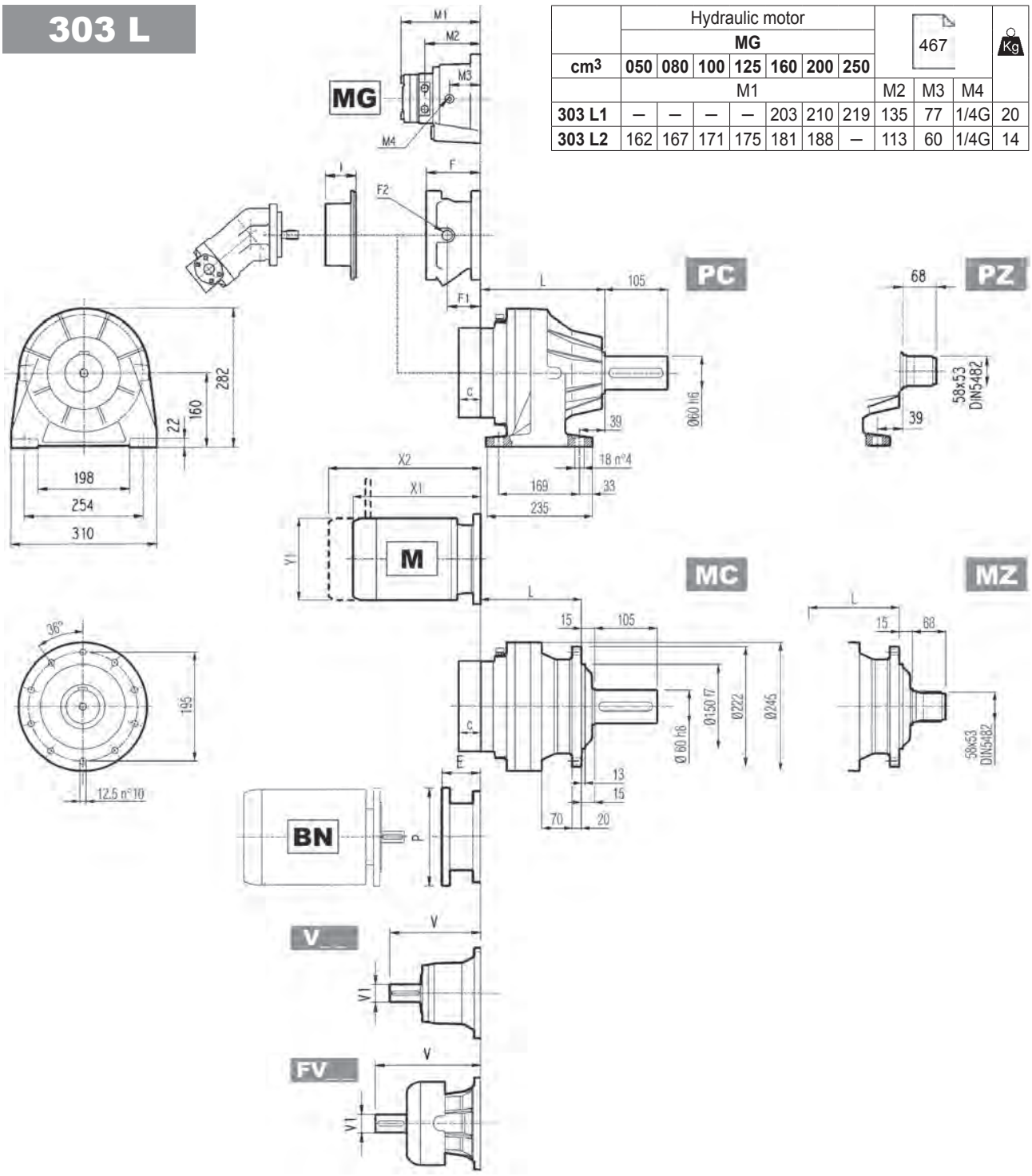

	Hydraulic motor							467			Kg
	MG										
cm³	050	080	100	125	160	200	250				
	M1							M2	M3	M4	
303 L1	—	—	—	—	203	210	219	135	77	1/4G	20
303 L2	162	167	171	175	181	188	—	113	60	1/4G	14

	L				Kg			
	MC - MZ	PC - PZ	HC - HZ	FP - FZ - FDK	MC - MZ	PC - PZ	HC - HZ	FP - FZ - FDK
303 L1	125	165	150	125	31	40	35	31
303 L2	178	218	203	178	35	44	39	35
303 L3	231	271	256	231	39	48	43	39
303 L4	284	324	309	284	43	52	47	43

	V	V1	Kg	V	V1	Kg	V	V1	Kg	V	V1	Kg	C	Input	I	F	F1	F2	Type	Input	Kg
303 L1	239	48	15	—	—	—	276	48	17	—	—	—	37	A		145	95	1/4 G	5	A	16
303 L2	137.5	24	6	158	38	7	—	—	—	—	—	—	37	A		105	65	1/4 G	4	A	10
303 L3	137.5	24	6	158	38	7	—	—	—	—	—	—	37	A	457	105	65	1/4 G	4	A	10
303 L4	137.5	24	6	158	38	7	—	—	—	—	—	—	37	A		105	65	1/4 G	4	A	10

303 L

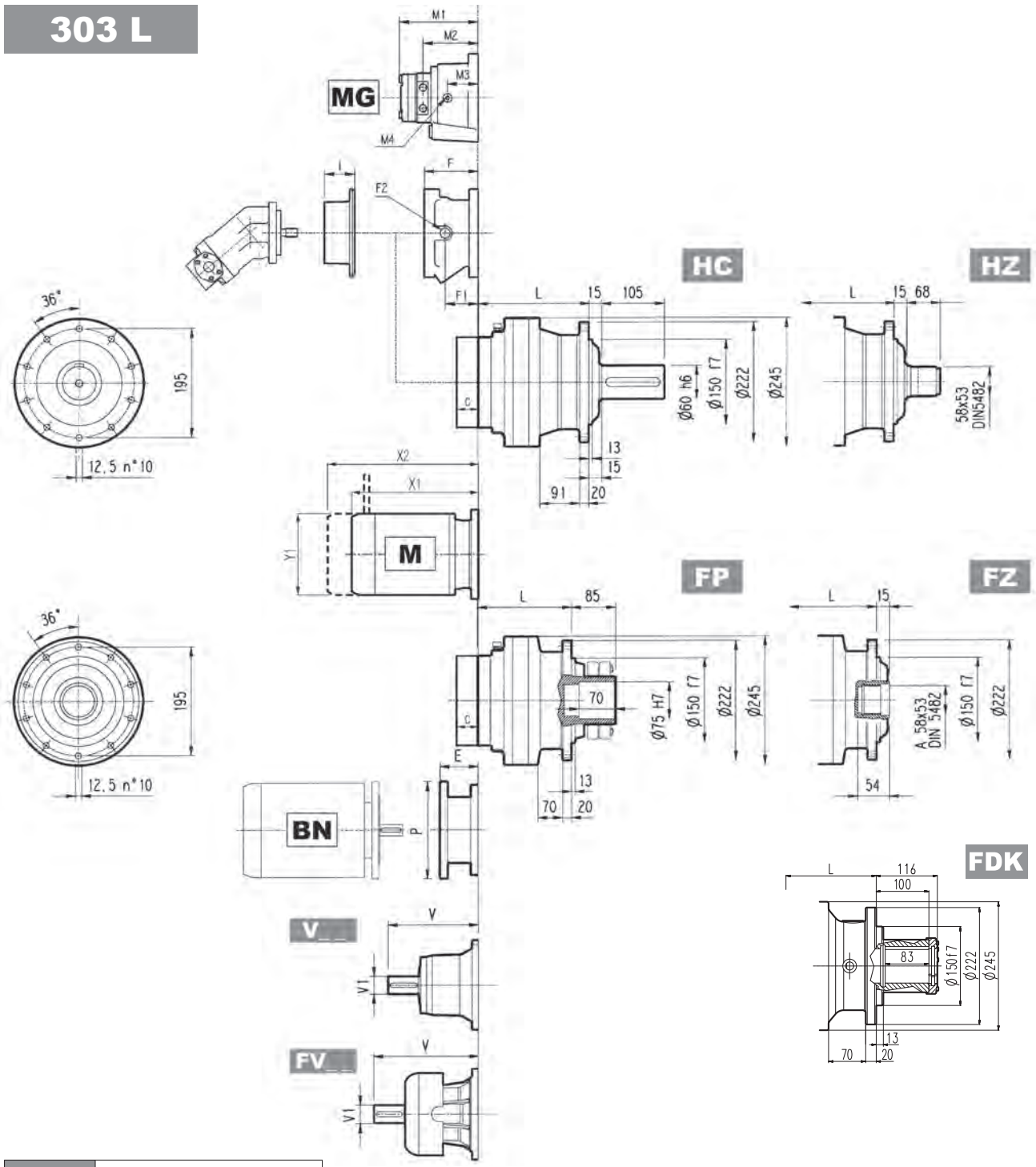

FP M_{2max} = 5200 Nm

	P71		P80		P90		P100		P112		P132		P160		P180		P200	
	E	P	E	P	E	P	E	P	E	P	E	P	E	P	E	P	E	P
303 L1	—	—	—	—	—	—	—	—	—	—	114	300	144	350	144	350	174	400
303 L2	65	160	84	200	84	200	94	250	94	250	114	300	144	350	—	—	—	—
303 L3	65	160	84	200	84	200	94	250	94	250	114	300	144	350	—	—	—	—
303 L4	65	160	84	200	84	200	94	250	94	250	114	300	144	350	—	—	—	—

	S1 + M1			S2 + M2S			S3 + M3S			S3 + M3L			S4 + M4			S5 + M5S			S5 + M5L		
	X1	X2	Y1	X1	X2	Y1	X1	X2	Y1	X1	X2	Y1	X1	X2	Y1	X1	X2	Y1	X1	X2	Y1
303 L1	—	—	—	—	—	—	—	—	—	—	—	—	460	571	258	552	692	310	596	736	310
303 L2	253	314	138	280	352	156	325	421	195	357	449	195	460	571	258	—	—	—	—	—	—
303 L3	253	314	138	280	352	156	325	421	195	357	449	195	460	571	258	—	—	—	—	—	—
303 L4	253	314	138	280	352	156	325	421	195	357	449	195	460	571	258	—	—	—	—	—	—

303 R

	Hydraulic motor							467			Kg
	MG										
cm³	050	080	100	125	160	200	250				
	M1							M2	M3	M4	
303 R2	162	167	171	175	181	188	—	113	60	1/4G	14

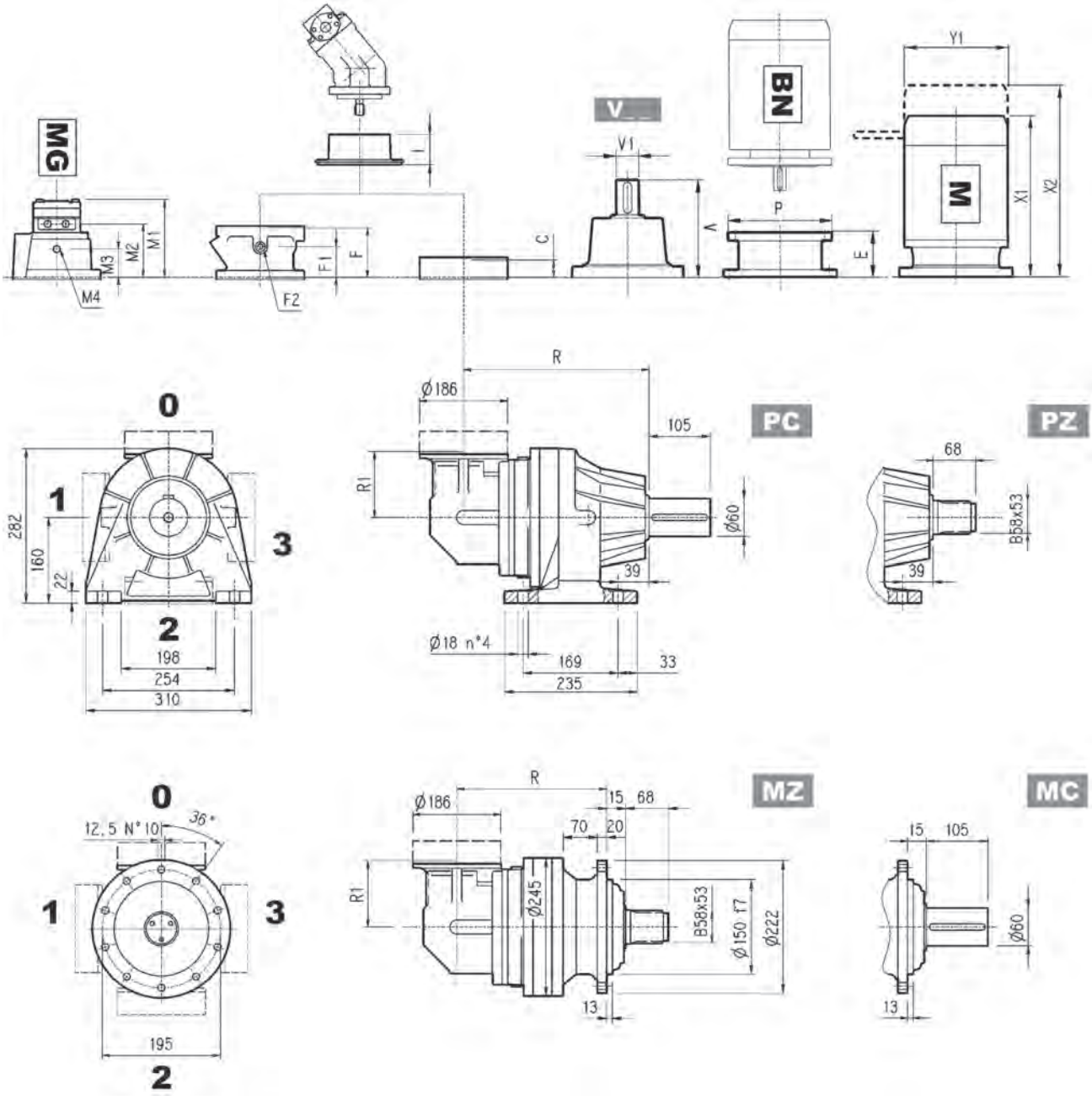

	R				R1	Kg			
	MC - MZ	PC - PZ	HC - HZ	FP - FZ - FDK		MC - MZ	PC - PZ	HC - HZ	FP - FZ - FDK
303 R2	217	257	242	217	140	51	60	55	51
303 R3	270	310	295	270	122	49	58	53	49
303 R4	323	363	348	323	122	53	62	57	53

	V	V1	Kg	V	V1	Kg	C	Input	I	F	F1	F2	Type	Input	Kg
303 R2	137.5	24	6	158	38	7	37	A		105	65	1/4 G	4	A	10
303 R3	137.5	24	6	158	38	7	37	A		105	65	1/4 G	4	A	10
303 R4	137.5	24	6	158	38	7	37	A	457	105	65	1/4 G	4	A	10

303 R

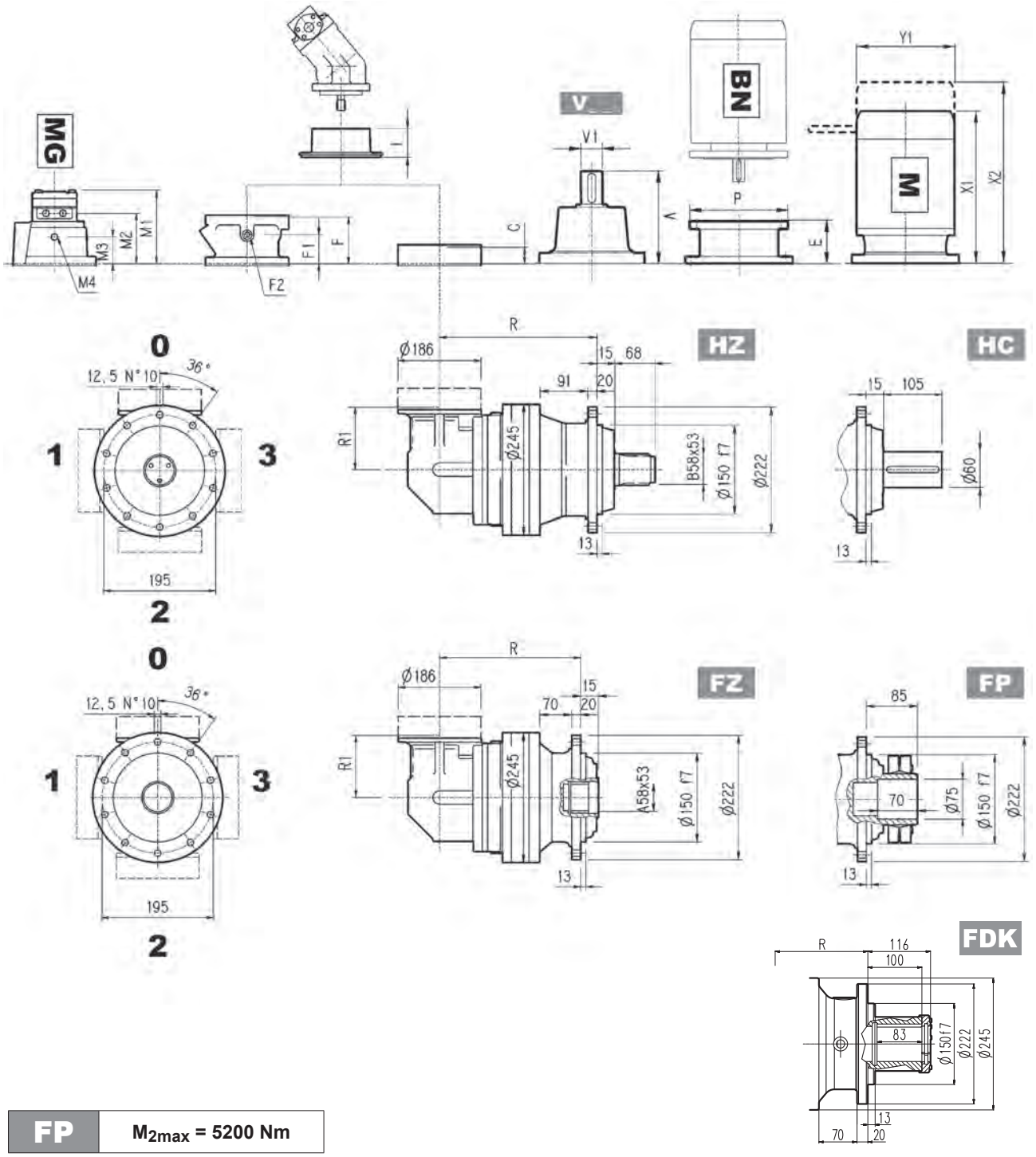

FP M_{2max} = 5200 Nm

	P71		P80		P90		P100		P112		P132	
	E	P	E	P	E	P	E	P	E	P	E	P
303 R2	65	160	84	200	84	200	94	250	94	250	114	300
303 R3	65	160	84	200	84	200	94	250	94	250	114	300
303 R4	65	160	84	200	84	200	94	250	94	250	114	300

	S1 + M1			S2 + M2S			S3 + M3S			S3 + M3L			S4 + M4		
	X1	X2	Y1	X1	X2	Y1	X1	X2	Y1	X1	X2	Y1	X1	X2	Y1
303 R2	—	—	—	328	400	156	373	469	195	405	497	195	508	619	258
303 R3	253	314	138	328	400	156	373	469	195	405	497	195	—	—	—
303 R4	253	314	138	328	400	156	373	469	195	405	497	195	—	—	—

3/V 03 L3

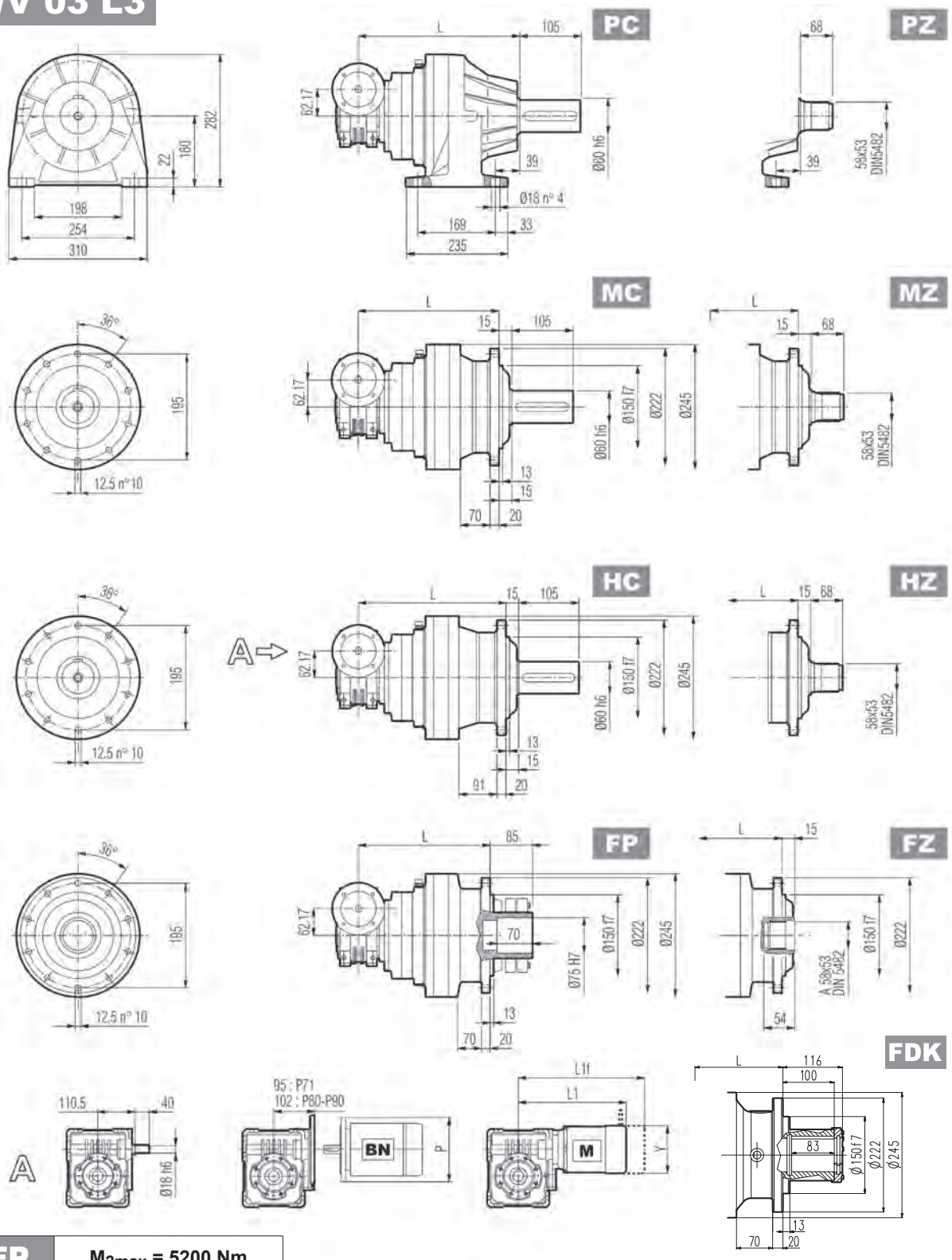

FP M_{2max} = 5200 Nm

	L				Kg			
	MC - MZ	PC - PZ	HC - HZ	FP - FZ - FDK	MC - MZ	PC - PZ	HC - HZ	FP - FZ - FDK
3/V 03 L3	270	330	315	270	43	51	45	41

	P71	P80	P90	S1 + M1			S2 + M2S		
	P	P	P	L1	L1f	Y	L1	L1f	Y
3/V 03 L3	160	200	200	289	350	138	317	393	156

3/A 03 L2

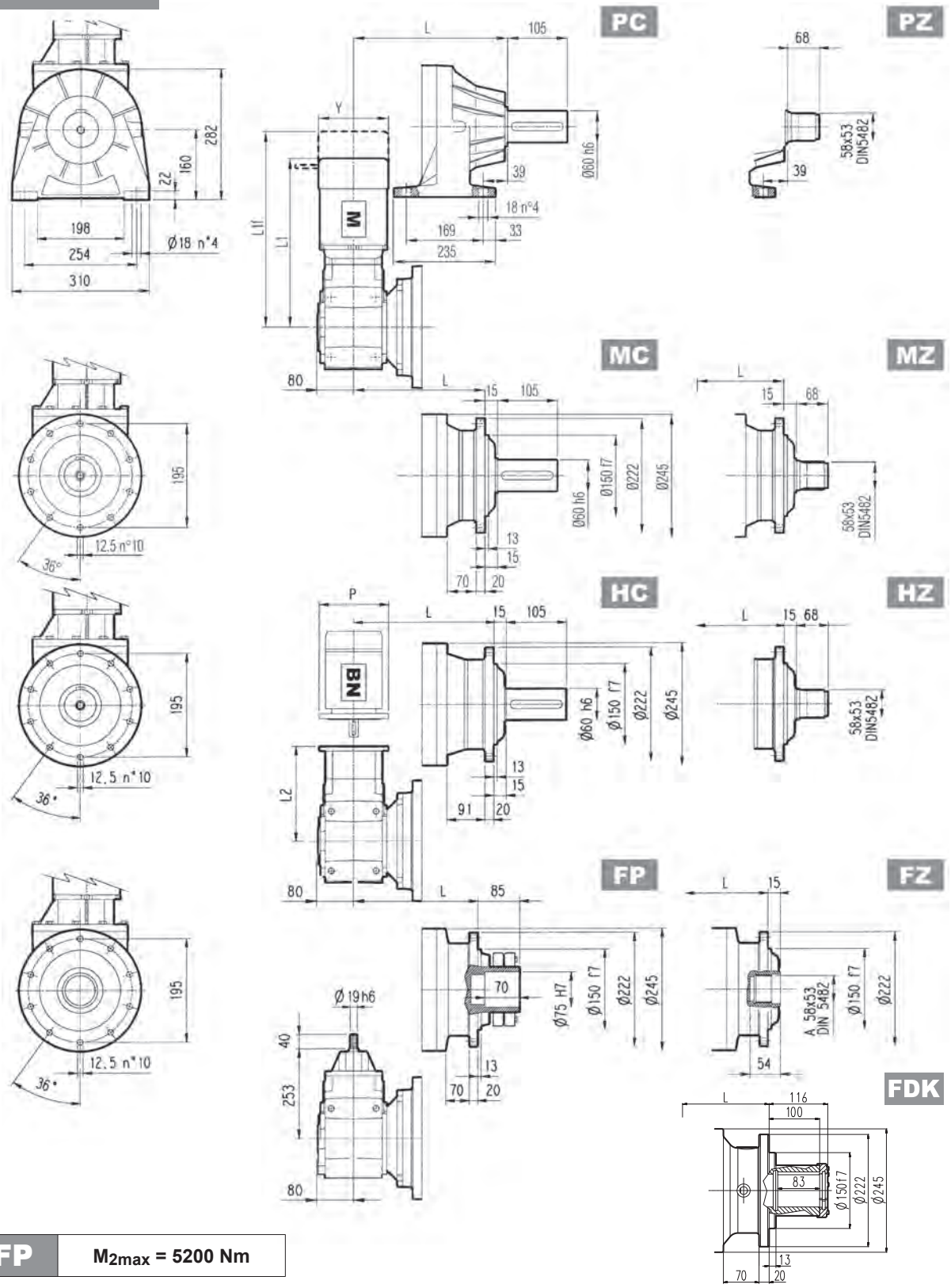

FP M_{2max} = 5200 Nm

	L				Kg			
	MC - MZ	PC - PZ	HC - HZ	FP - FZ - FDK	MC - MZ	PC - PZ	HC - HZ	FP - FZ - FDK
3/A 03 L2	225	285	270	225	63	71	65	60

	P63		P71		P80		P90		P100		P112		S1 + M1			S2 + M2S			S3 + M3SA			S3 + M3LA		
	L2	P	L2	P	L2	P	L2	P	L2	P	L2	P	L1	L1f	Y	L1	L1f	Y	L1	L1f	Y	L1	L1f	Y
3/A 03 L2	243	140	243	160	262	200	262	200	272	250	272	250	399	416	138	425	497	156	470	467	195	501	518	195

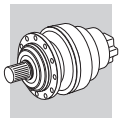

303 L | 303 R | 3/V 03 L3 | 3/A 03 L2

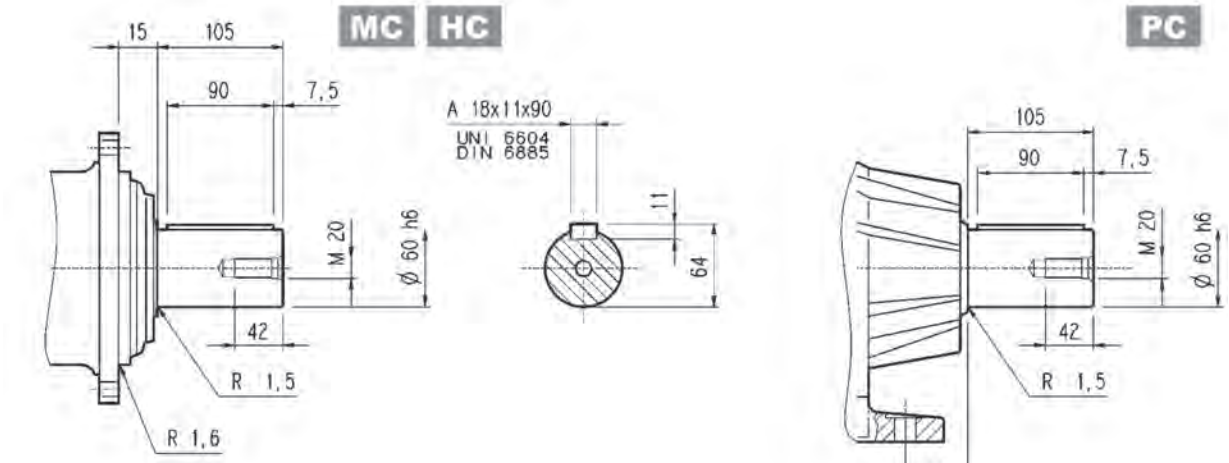

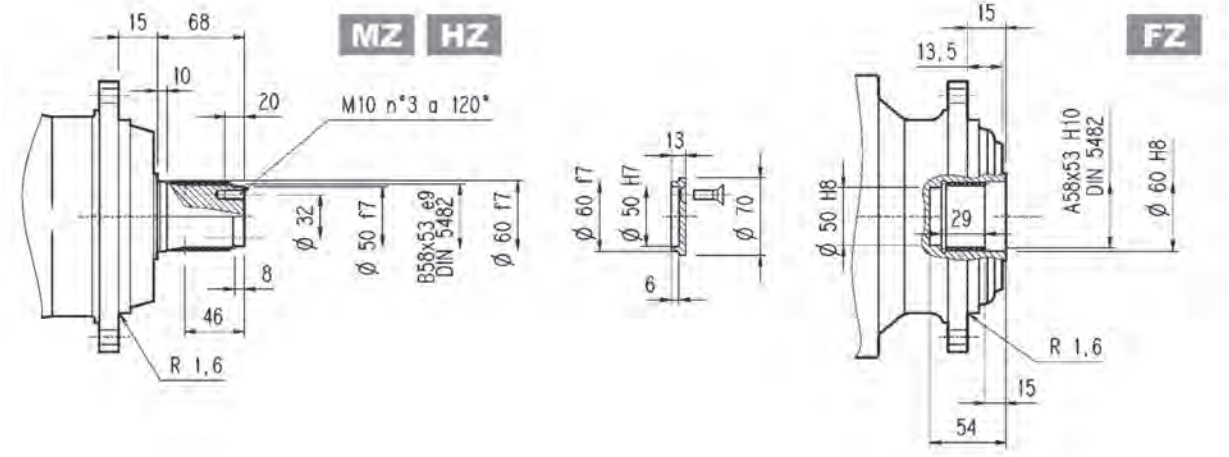

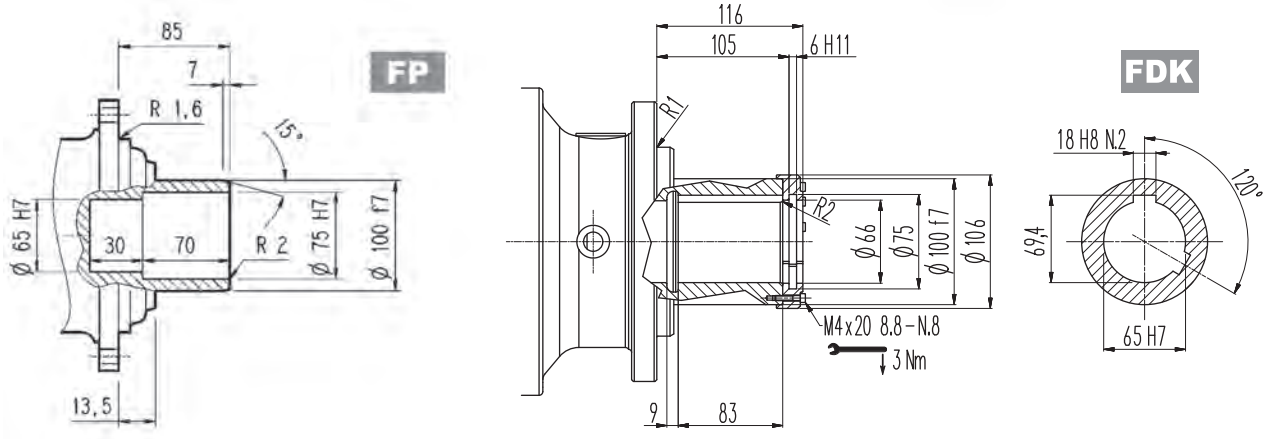

FP	M_{2max} = 5200 Nm

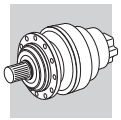

303 L | 303 R | 3/V 03 L3 | 3/A 03 L2

Flange

W0A

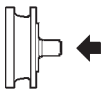

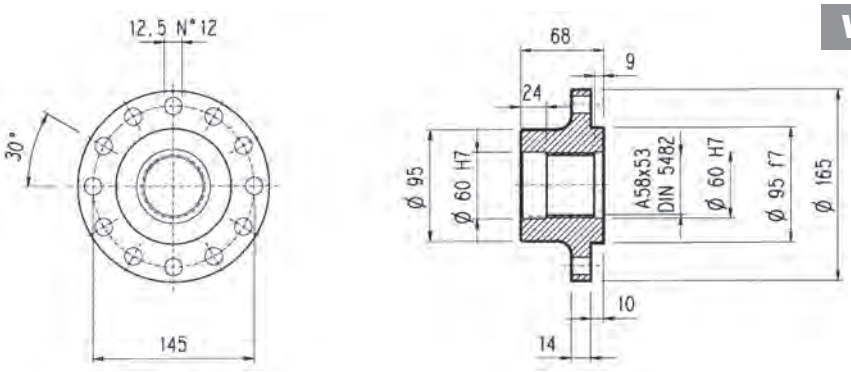

Material: Steel C40

Pinions

P...

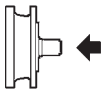

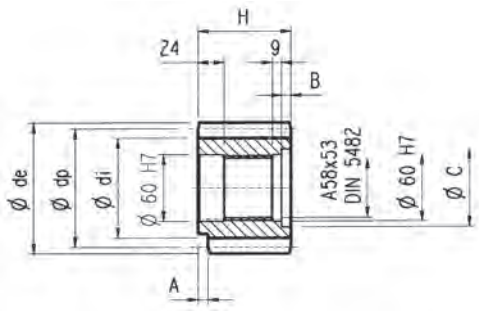

α = 20°

	m	z	x	dp	di	de	H	A	B	C	Material
PCL1	5	19	—	95	82	104	77	12	9	72	Steel 39NiCrMo3 hardened and tempered
PCL2	5	19	—	95	82	104	68	—	—	—	
PCM	5	20	—	100	87.5	110	68	18	—	—	Steel 18NiCrMo5 case hardened
PCP	5	22	—	110	97.5	120	68	18	—	—	
PDE	6	14	0.500	84	75	99.6	68	—	—	—	Steel 39NiCrMo3 hardened and tempered
PDI	6	18	0.500	108	99	123.6	68	—	—	—	
PDM	6	20	0.833	120	115	140	68	—	—	—	
PFD	8	13	0.675	104	95	127.6	68	—	—	—	Steel 18NiCrMo5 case hardened
PFE1	8	14	—	112	92	126	68	—	—	—	
PFE2	8	14	—	112	92	126	80	—	12	72	
PFF	8	15	—	120	100	136	68	—	—	—	Steel 39NiCrMo3 hardened and tempered
PFP	8	22	—	176	156	190	77	12	10	71	
PHG	10	16	0.500	160	145	188	75	—	7	72	

Sleeve coupling

M0A

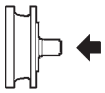

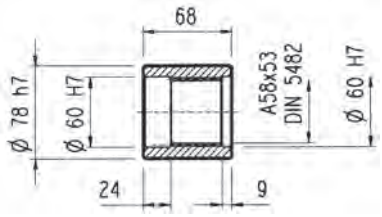

Material: Steel 16CrNi4

Splined bars

B0A

Material: Case hardening steel 18NiCrMo5 UNI 5331
must be case hardened 50-55 HRC

Shrink disc

G0A

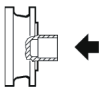

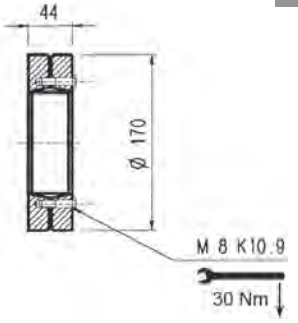

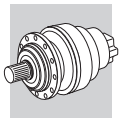

303 L 303 R

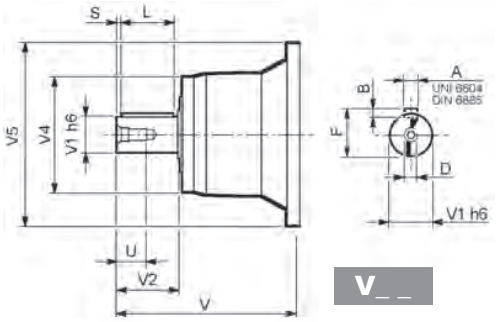

V_ _

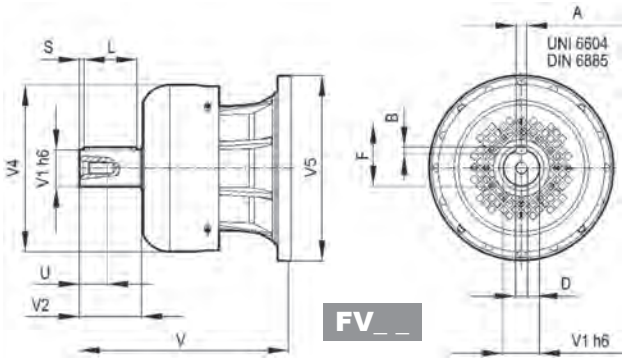

FV_ _

		V	V1	V2	V4	V5	A	B	F	L	S	D	U
303 L1	**V05B**	239	48	82	155	245	14	9	51.5	70	6	M16	36
	FV05B	276	48	82	219.5	244	14	9	51.5	70	6	M16	36
303 L2	**V01A**	137.5	24	36	120	186	8	7	27	30	3	M8	19
	V01B	158	38	58	120	186	10	8	41	50	4	M12	28
303 L3	**V01A**	137.5	24	36	120	186	8	7	27	30	3	M8	19
	V01B	158	38	58	120	186	10	8	41	50	4	M12	28
303 L4	**V01A**	137.5	24	36	120	186	8	7	27	30	3	M8	19
	V01B	158	38	58	120	186	10	8	41	50	4	M12	28
303 R2-R3-R4	**V01A**	137.5	24	36	120	186	8	7	27	30	3	M8	19
	V01B	158	38	58	120	186	10	8	41	50	4	M12	28

303 L 303 R

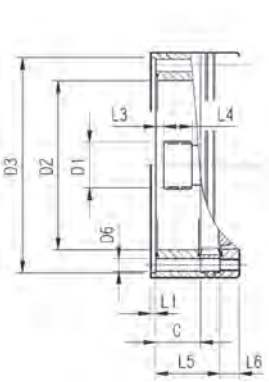

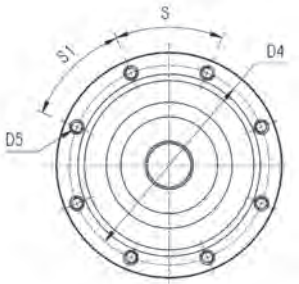

		C	D1	D2	D3	D4	D5	D6	L1	L2	L3	L4	L5	L6	S	S1	Input
303 L1	**V9AA**	37	40x36 DIN5482	140	178 H7	165	M10 n°8	11	4	—	9	18	—	18	45°	45°	A
303 L2	**V9AA**	37	40x36 DIN5482	140	178 H7	165	M10 n°8	11	4	—	9	18	53	18	45°	45°	A
303 L3	**V9AA**	37	40x36 DIN5482	140	178 H7	165	M10 n°8	11	4	—	9	18	106	18	45°	45°	A
303 L4	**V9AA**	37	40x36 DIN5482	140	178 H7	165	M10 n°8	11	4	—	9	18	159	18	45°	45°	A
303 R2-R3-R4	**V9AA**	37	40x36 DIN5482	140	178 H7	165	M10 n°8	11	4	—	9	18	37	18	45°	45°	A

3/V 03 L3

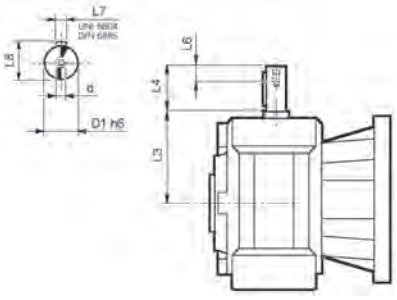

	D1 h6	L3	L4	L6	L7	L8	d
3/V 03 L3_HS	18	110.5	40	16	6	20.5	M6

3/A 03 L2

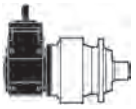

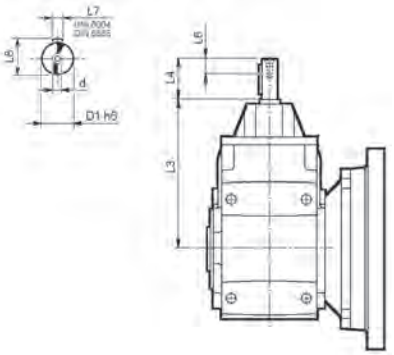

	D1 h6	L3	L4	L6	L7	L8	d
3/A 03 L2_HS	19	252.5	40	16	6	21.5	M6

303 L | 303 R | 3/V 03 L3 | 3/A 03 L2

Permissible radial and axial loads on output shaft with $Fh_2 : n_2 \cdot h = 100000$

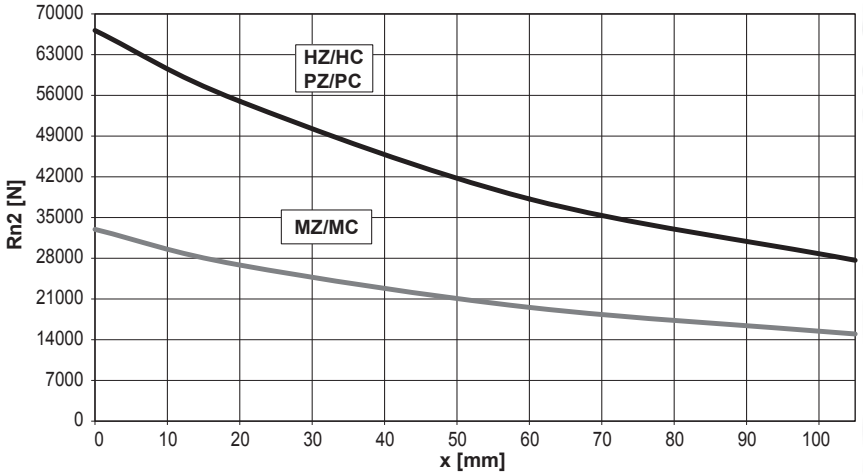

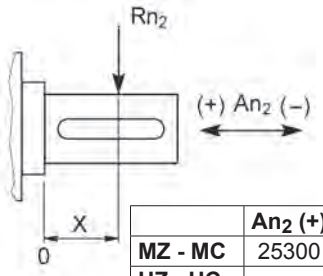

	An2 (+)	An2 (-)
MZ - MC	25300	20240
HZ - HC PZ - PC	27500	22000

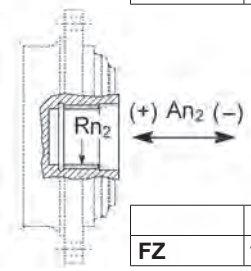

	Rn2	An2 (+/-)
FZ	11140	11604

Load corrective factor fh_2 on shafts	$Fh_2 = n_2 \cdot h$		10000	25000	50000	100000	500000	1000000
	fh_2	FZ	**2.15**	**1.59**	**1.26**	**1.00**	**0.58**	**0.46**
		MZ - MC	**2.15**	**1.59**	**1.26**	**1.00**	**0.58**	**0.46**
		HZ - HC - PZ - PC	**1.48**	**1.48**	**1.23**	**1.00**	**0.62**	**0.50**

Permissible radial loads on input shaft with $Fh_1 : n_1 \cdot h = 250000$

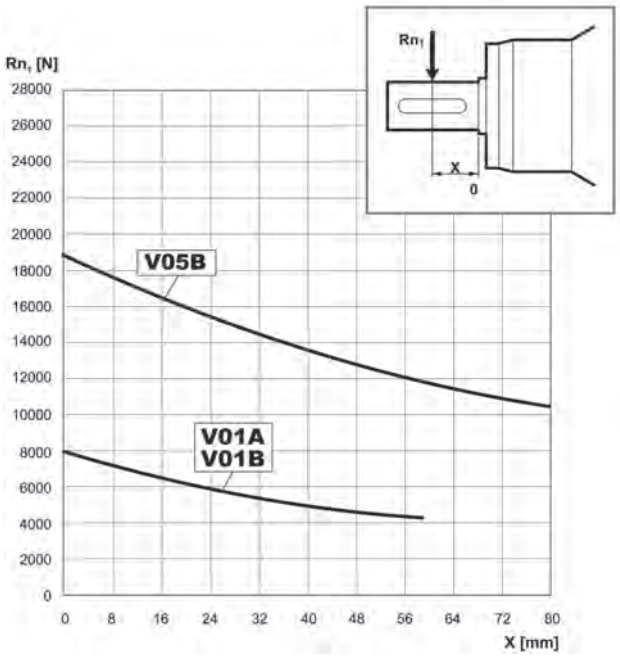

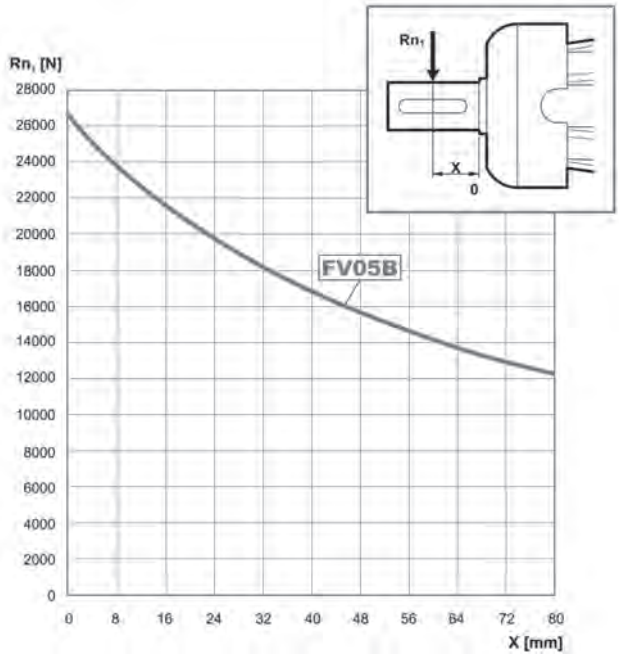

Load corrective factor fh_1 on shafts	$Fh_1 = n_1 \cdot h$	250000	500000	1000000	2000000	5000000	10000000
	fh_1	**1**	**0.79**	**0.63**	**0.50**	**0.37**	**0.29**

303 VK

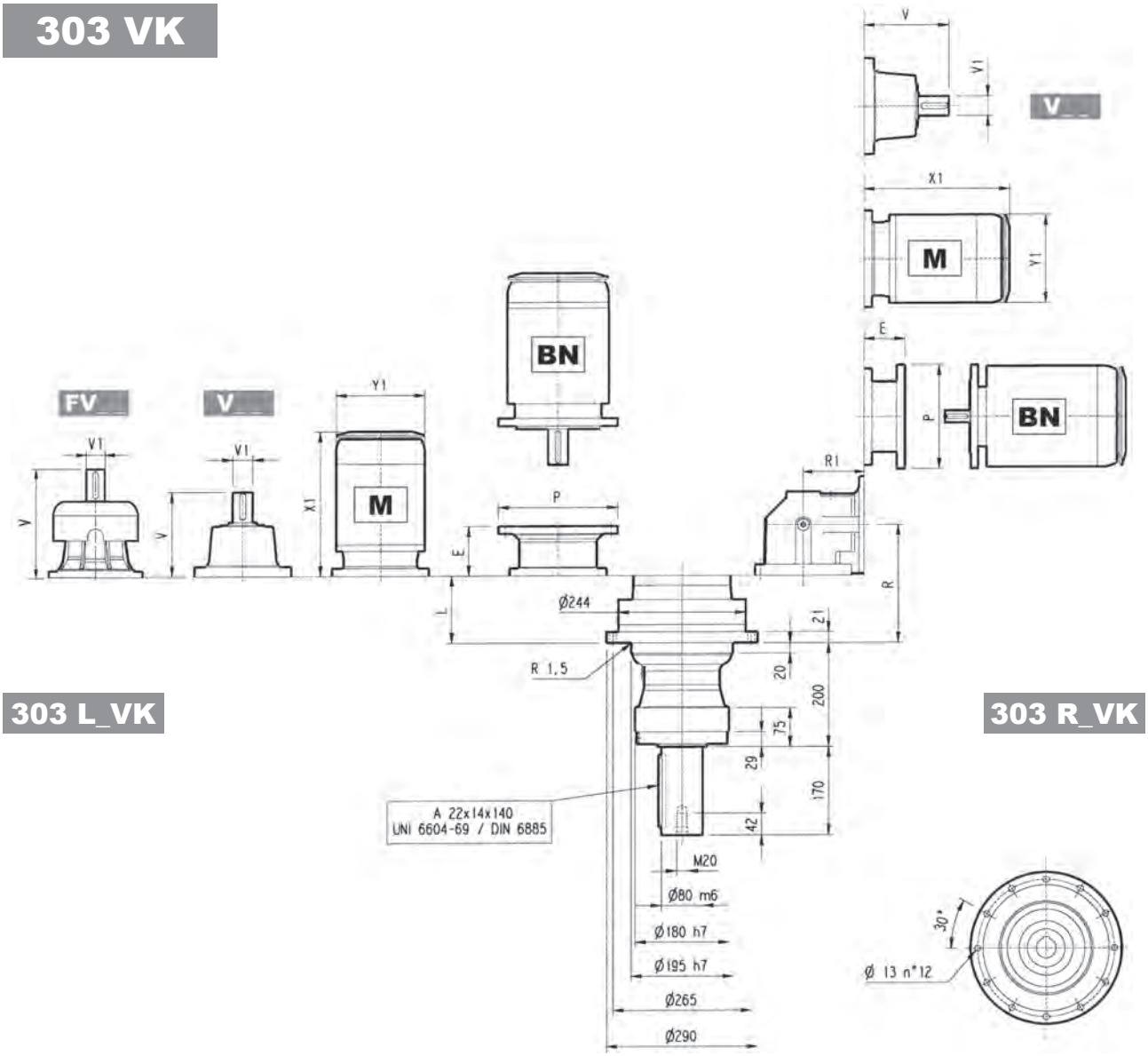

303 L_VK

303 R_VK

	L	Kg	V	V1	Kg	V	V1	Kg	V	V1	Kg	V	V1	Kg	P71		P80		P90		P100		P112		P132		P160		P180		P200	
															E	P	E	P	E	P	E	P	E	P	E	P	E	P	E	P	E	P
303 L1	51	65	239	48	15	—	—	—	276	48	17	—	—	—	—	—	—	—	—	—	—	—	—	—	114	300	144	350	144	350	174	400
303 L2	104	70	137.5	24	6	158	38	7	—	—	—	—	—	—	65	160	84	200	84	200	94	250	94	250	114	300	144	350	—	—	—	—
303 L3	157	73	137.5	24	6	158	38	7	—	—	—	—	—	—	65	160	84	200	84	200	94	250	94	250	114	300	144	350	—	—	—	—
303 L4	210	77	137.5	24	6	158	38	7	—	—	—	—	—	—	65	160	84	200	84	200	94	250	94	250	114	300	144	350	—	—	—	—

	S1 + M1			S2 + M2S			S3 + M3S			S3 + M3L			S4 + M4			S5 + M5S			S5 + M5L		
	X1	X2	Y1	X1	X2	Y1	X1	X2	Y1	X1	X2	Y1	X1	X2	Y1	X1	X2	Y1	X1	X2	Y1
303 L1	—	—	—	—	—	—	—	—	—	—	—	—	460	571	258	552	692	310	596	736	310
303 L2	253	314	138	280	352	156	325	421	195	357	449	195	460	571	258	—	—	—	—	—	—
303 L3	253	314	138	280	352	156	325	421	195	357	449	195	460	571	258	—	—	—	—	—	—
303 L4	253	314	138	280	352	156	325	421	195	357	449	195	460	571	258	—	—	—	—	—	—

	R	R1	Kg	V	V1	Kg	V	V1	Kg	P71		P80		P90		P100		P112		P132	
										E	P	E	P	E	P	E	P	E	P	E	P
303 R2	143	140	85	137.5	24	6	158	38	7	65	160	84	200	84	200	94	250	94	250	114	300
303 R3	196	122	83	137.5	24	6	158	38	7	65	160	84	200	84	200	94	250	94	250	114	300
303 R4	249	122	87	137.5	24	6	158	38	7	65	160	84	200	84	200	94	250	94	250	114	300

	S1 + M1			S2 + M2S			S3 + M3S			S3 + M3L			S4 + M4		
	X1	X2	Y1	X1	X2	Y1	X1	X2	Y1	X1	X2	Y1	X1	X2	Y1
303 R2	—	—	—	328	400	156	373	469	195	405	497	195	508	619	258
303 R3	253	314	138	328	400	156	373	469	195	405	497	195	—	—	—
303 R4	253	314	138	328	400	156	373	469	195	405	497	195	—	—	—

303 VK

The diagram below allows the calculation of permitted overhung load R_{x2} on the output shaft of gearbox, with radial force applying at a distance x from shaft shoulder.
The curves are relevant to value resulting from the relationship of trust load A_{n2} to radial load R_{n2}, based on n_2 = 10 min^{-1} and 10000 hrs theoretical lifetime.

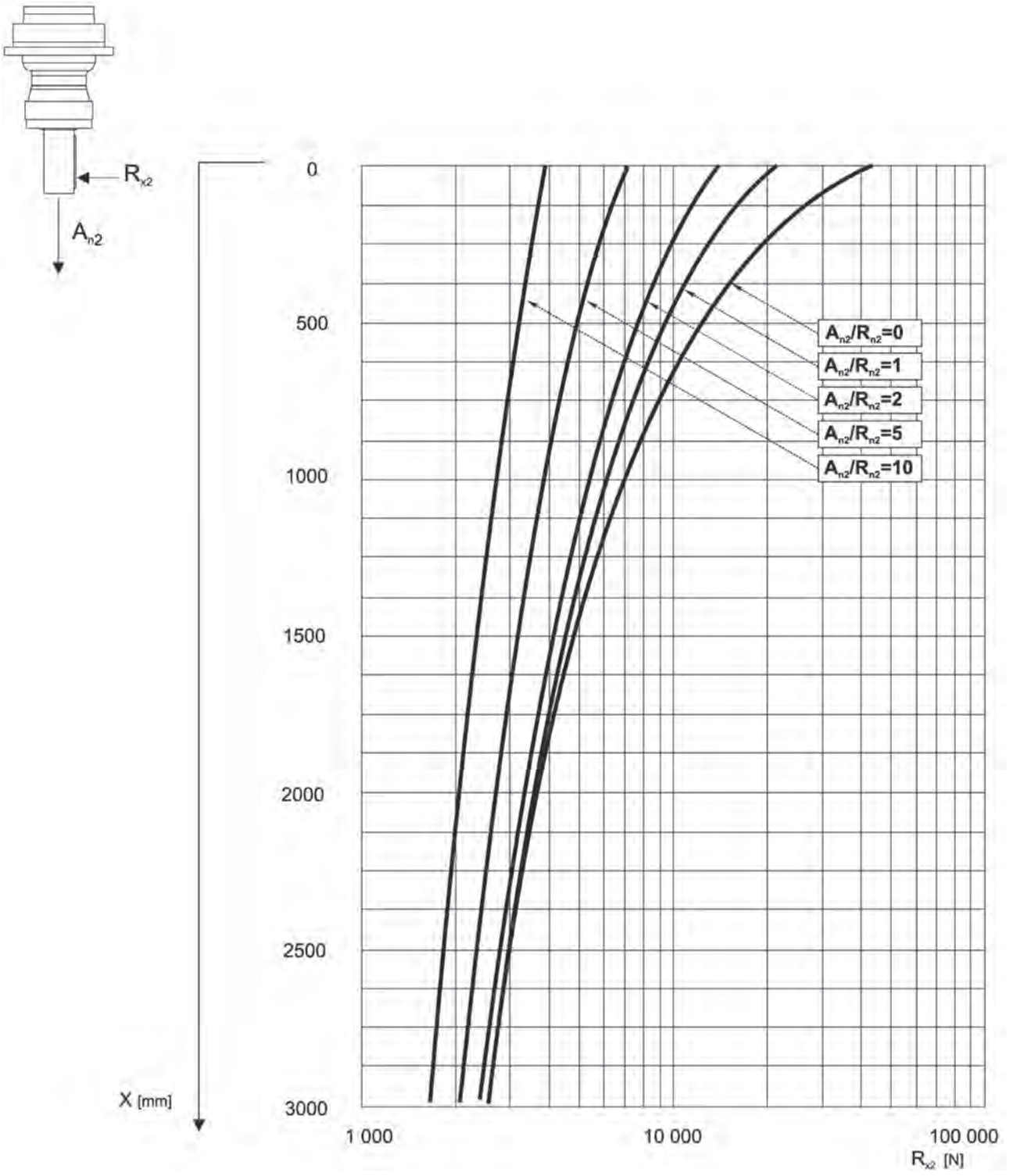

304 L

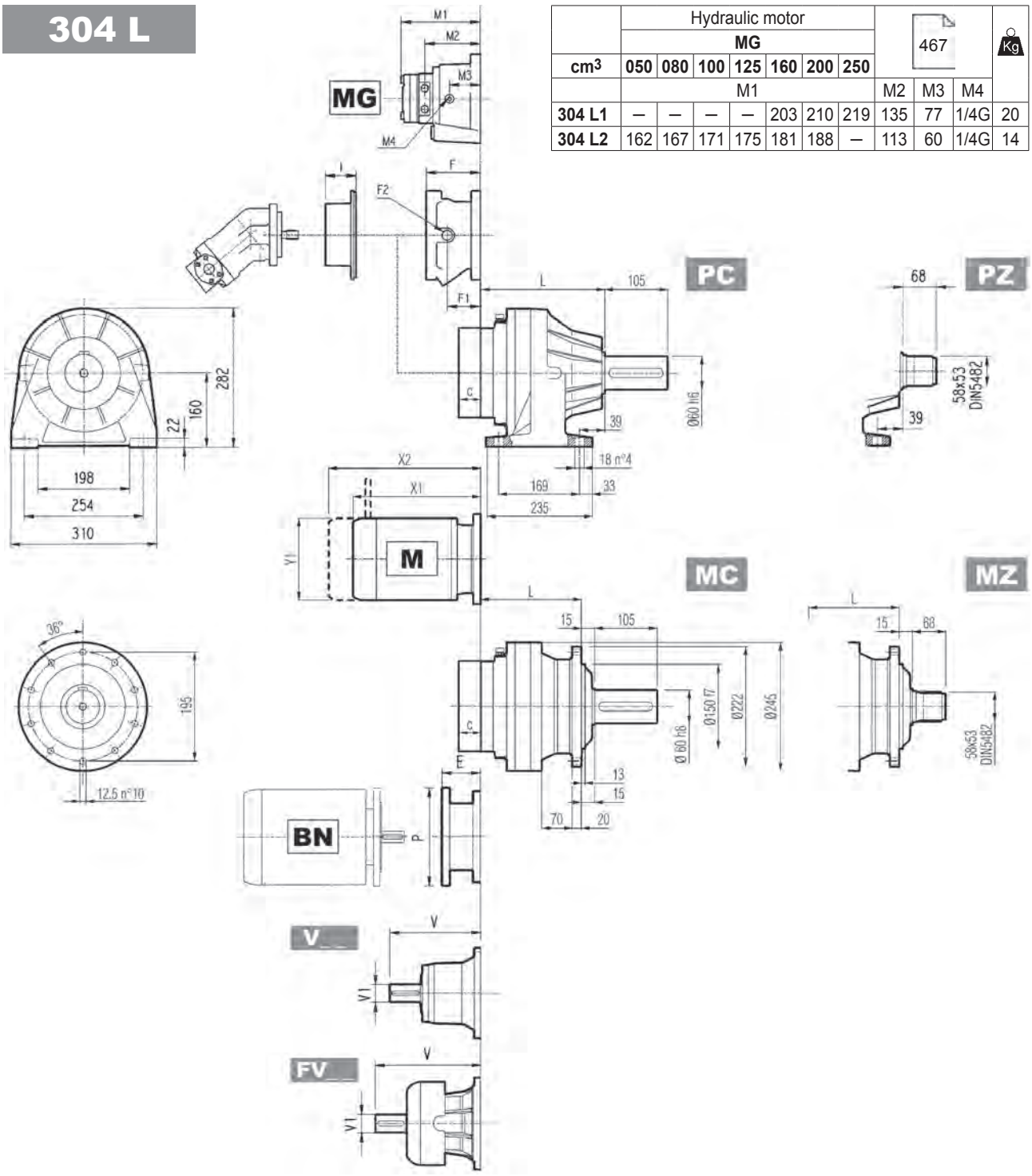

	Hydraulic motor							467			Kg
	MG										
cm³	050	080	100	125	160	200	250				
	M1							M2	M3	M4	
304 L1	—	—	—	—	203	210	219	135	77	1/4G	20
304 L2	162	167	171	175	181	188	—	113	60	1/4G	14

	L				Kg			
	MC - MZ	PC - PZ	HC - HZ	FP - FZ - FDK	MC - MZ	PC - PZ	HC - HZ	FP - FZ - FDK
304 L1	125	165	150	125	31	40	35	31
304 L2	190	230	215	190	38	47	42	38
304 L3	243	283	268	243	42	51	46	42
304 L4	296	336	321	296	46	55	50	46

	V	V1	Kg	V	V1	Kg	V	V1	Kg	V	V1	Kg	C	Input	I	F	F1	F2	Type	Input	Kg
304 L1	239	48	15	—	—	—	276	48	17	—	—	—	37	A	457	145	95	1/4 G	5	A	16
304 L2	137.5	24	6	158	38	7	—	—	—	—	—	—	37	A		105	65	1/4 G	4	A	10
304 L3	137.5	24	6	158	38	7	—	—	—	—	—	—	37	A		105	65	1/4 G	4	A	10
304 L4	137.5	24	6	158	38	7	—	—	—	—	—	—	37	A		105	65	1/4 G	4	A	10

304 L

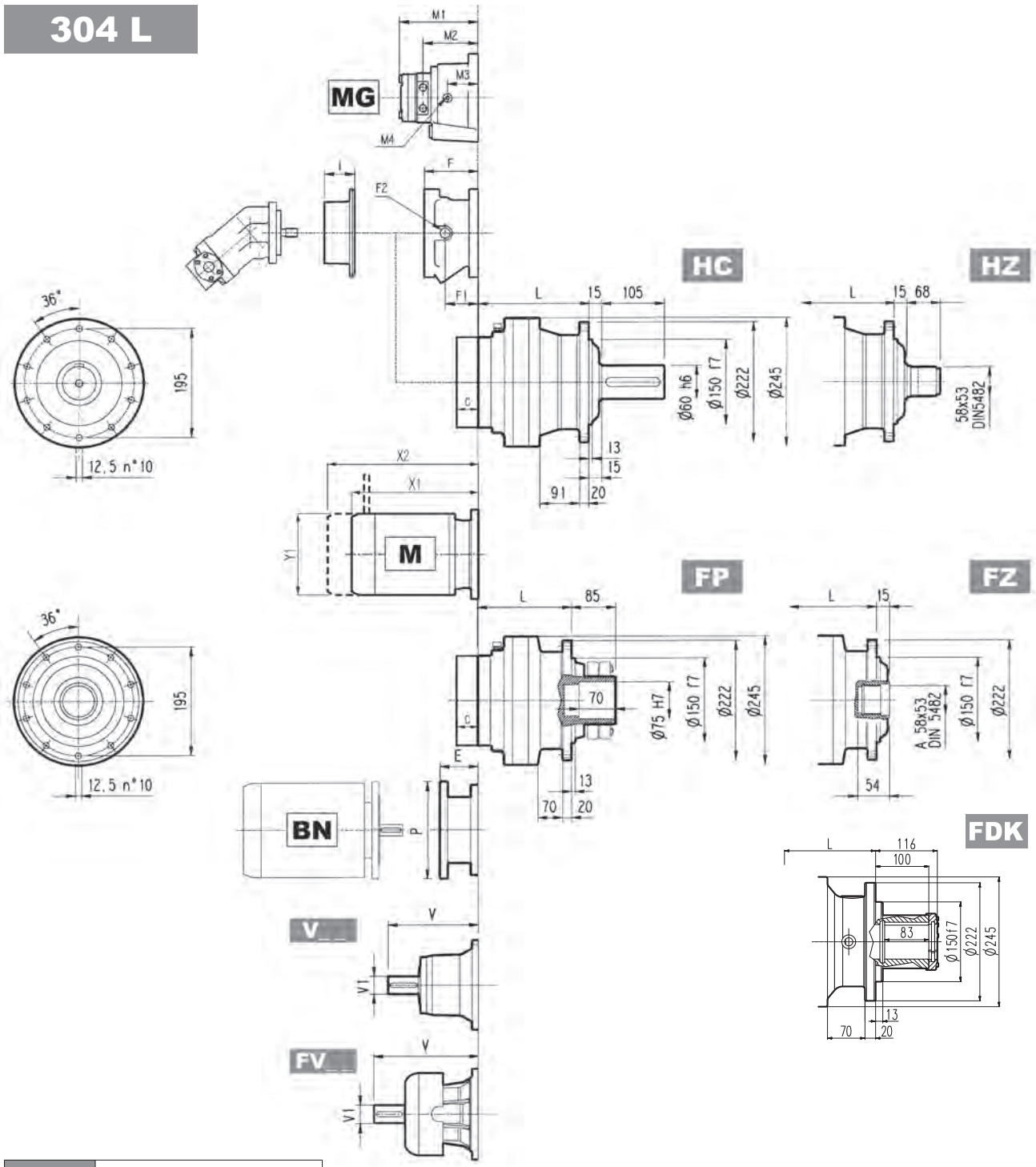

FP M_{2max} = 7300 Nm

	P71		P80		P90		P100		P112		P132		P160		P180		P200	
	E	P	E	P	E	P	E	P	E	P	E	P	E	P	E	P	E	P
304 L1	—	—	—	—	—	—	—	—	—	—	114	300	144	350	144	350	174	400
304 L2	65	160	84	200	84	200	94	250	94	250	114	300	144	350	—	—	—	—
304 L3	65	160	84	200	84	200	94	250	94	250	114	300	144	350	—	—	—	—
304 L4	65	160	84	200	84	200	94	250	94	250	114	300	144	350	—	—	—	—

	S1 + M1			S2 + M2S			S3 + M3S			S3 + M3L			S4 + M4			S5 + M5S			S5 + M5L		
	X1	X2	Y1	X1	X2	Y1	X1	X2	Y1	X1	X2	Y1	X1	X2	Y1	X1	X2	Y1	X1	X2	Y1
304 L1	—	—	—	—	—	—	—	—	—	—	—	—	460	571	258	552	692	310	596	736	310
304 L2	253	314	138	280	352	156	325	421	195	357	449	195	460	571	258	—	—	—	—	—	—
304 L3	253	314	138	280	352	156	325	421	195	357	449	195	460	571	258	—	—	—	—	—	—
304 L4	253	314	138	280	352	156	325	421	195	357	449	195	460	571	258	—	—	—	—	—	—

304 R

	Hydraulic motor							467			Kg
	MG										
cm³	050	080	100	125	160	200	250				
	M1							M2	M3	M4	
304 R2	162	167	171	175	181	188	—	113	60	1/4G	14

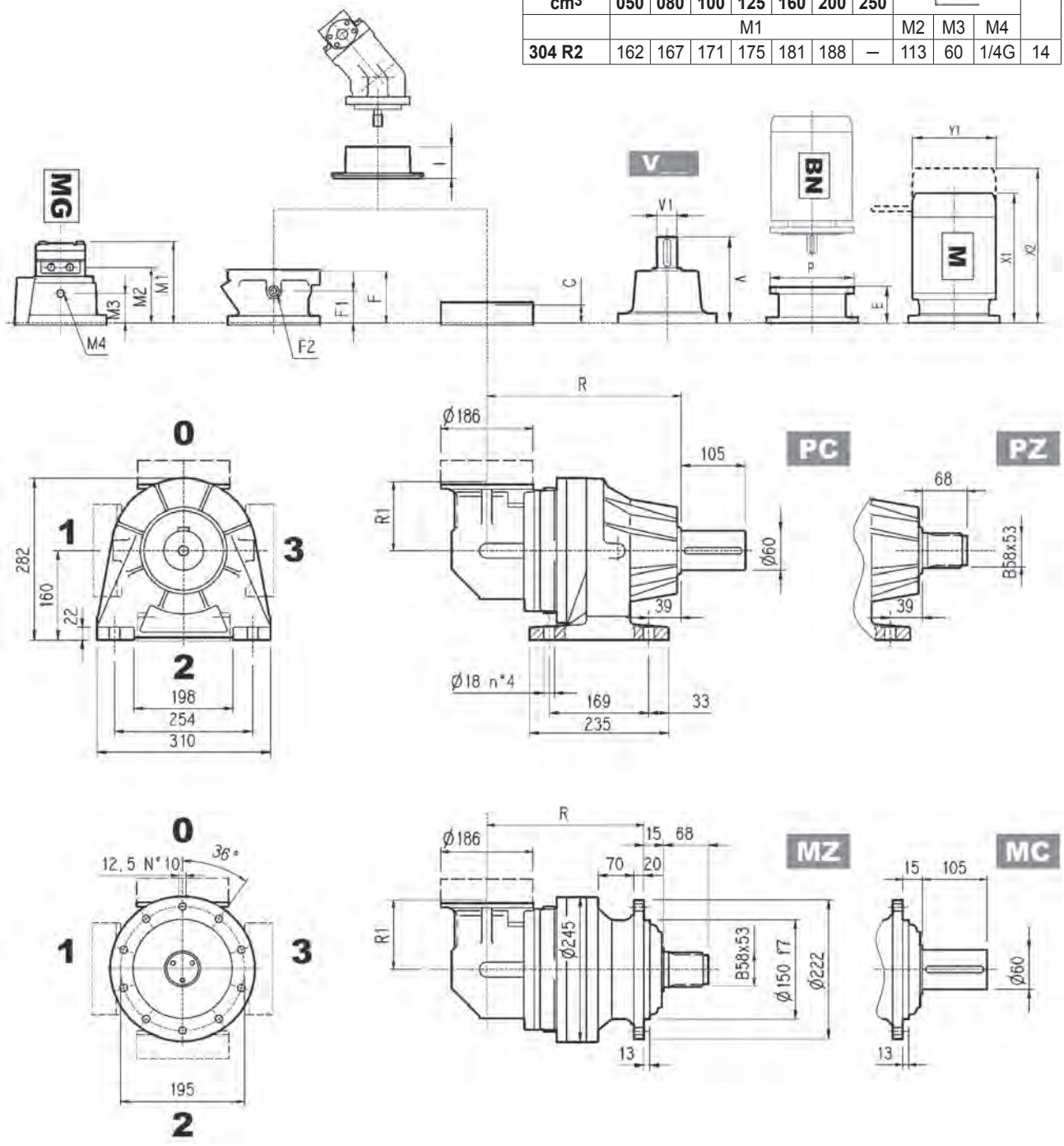

	R				R1	Kg			
	MC - MZ	PC - PZ	HC - HZ	FP - FZ - FDK		MC - MZ	PC - PZ	HC - HZ	FP - FZ - FDK
304 R2	217	257	242	217	140	51	60	55	51
304 R3	282	322	307	282	122	52	61	56	52
304 R4	335	375	360	335	122	56	65	60	56

	V	V1	Kg	V	V1	Kg	C	Input	I	F	F1	F2	Type	Input	Kg
304 R2	137.5	24	6	158	38	7	37	A		105	65	1/4 G	4	A	10
304 R3	137.5	24	6	158	38	7	37	A		105	65	1/4 G	4	A	10
304 R4	137.5	24	6	158	38	7	37	A	457	105	65	1/4 G	4	A	10

304 R

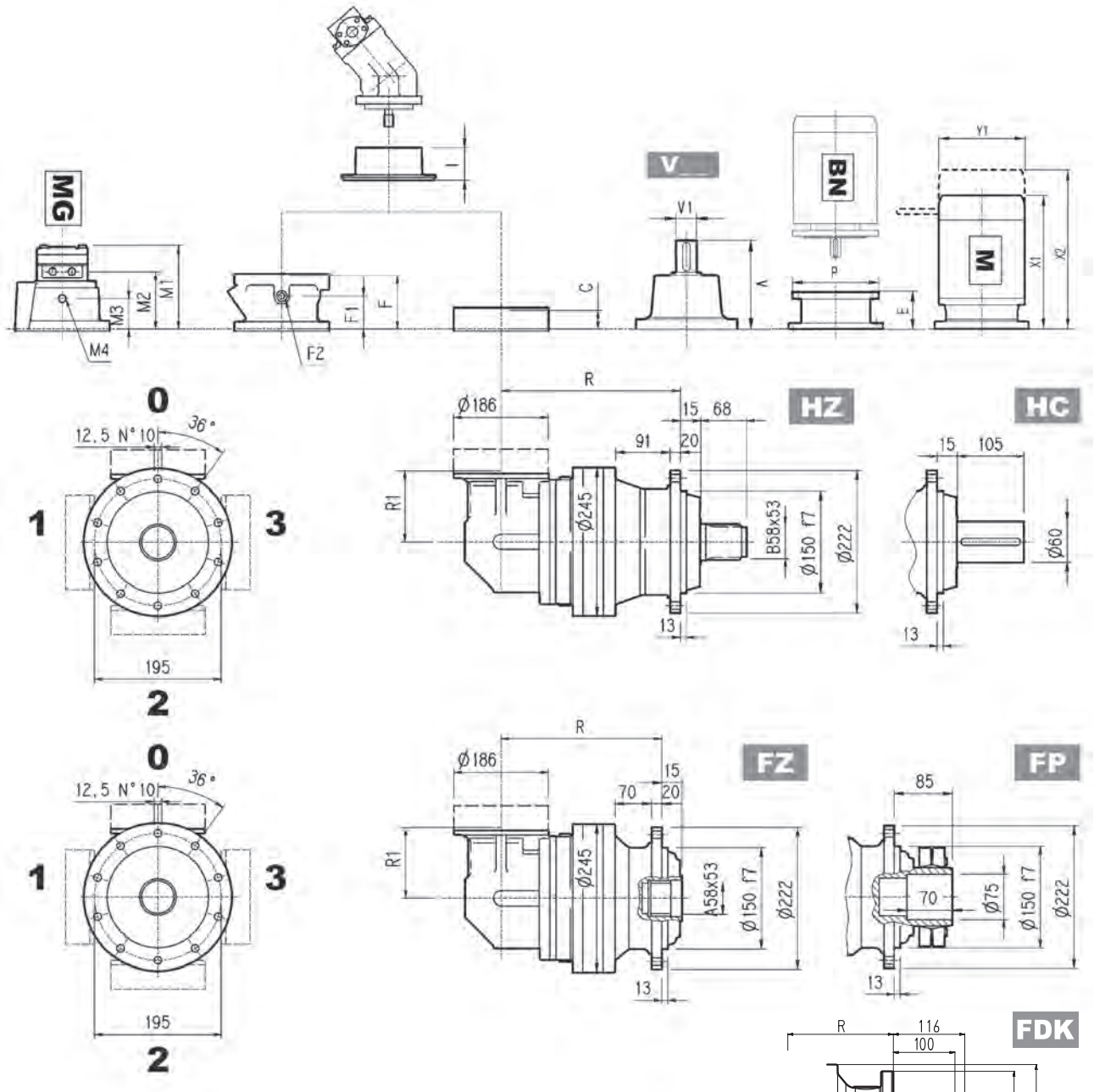

FP M_{2max} = 7300 Nm

	P71		P80		P90		P100		P112		P132	
	E	P	E	P	E	P	E	P	E	P	E	P
304 R2	65	160	84	200	84	200	94	250	94	250	114	300
304 R3	65	160	84	200	84	200	94	250	94	250	114	300
304 R4	65	160	84	200	84	200	94	250	94	250	114	300

	S1 + M1			S2 + M2S			S3 + M3S			S3 + M3L			S4 + M4		
	X1	X2	Y1	X1	X2	Y1	X1	X2	Y1	X1	X2	Y1	X1	X2	Y1
304 R2	-	-	-	328	400	156	373	469	195	405	497	195	508	619	258
304 R3	253	314	138	328	400	156	373	469	195	405	497	195	—	—	—
304 R4	253	314	138	328	400	156	373	469	195	405	497	195	—	—	—

3/V 04 L3

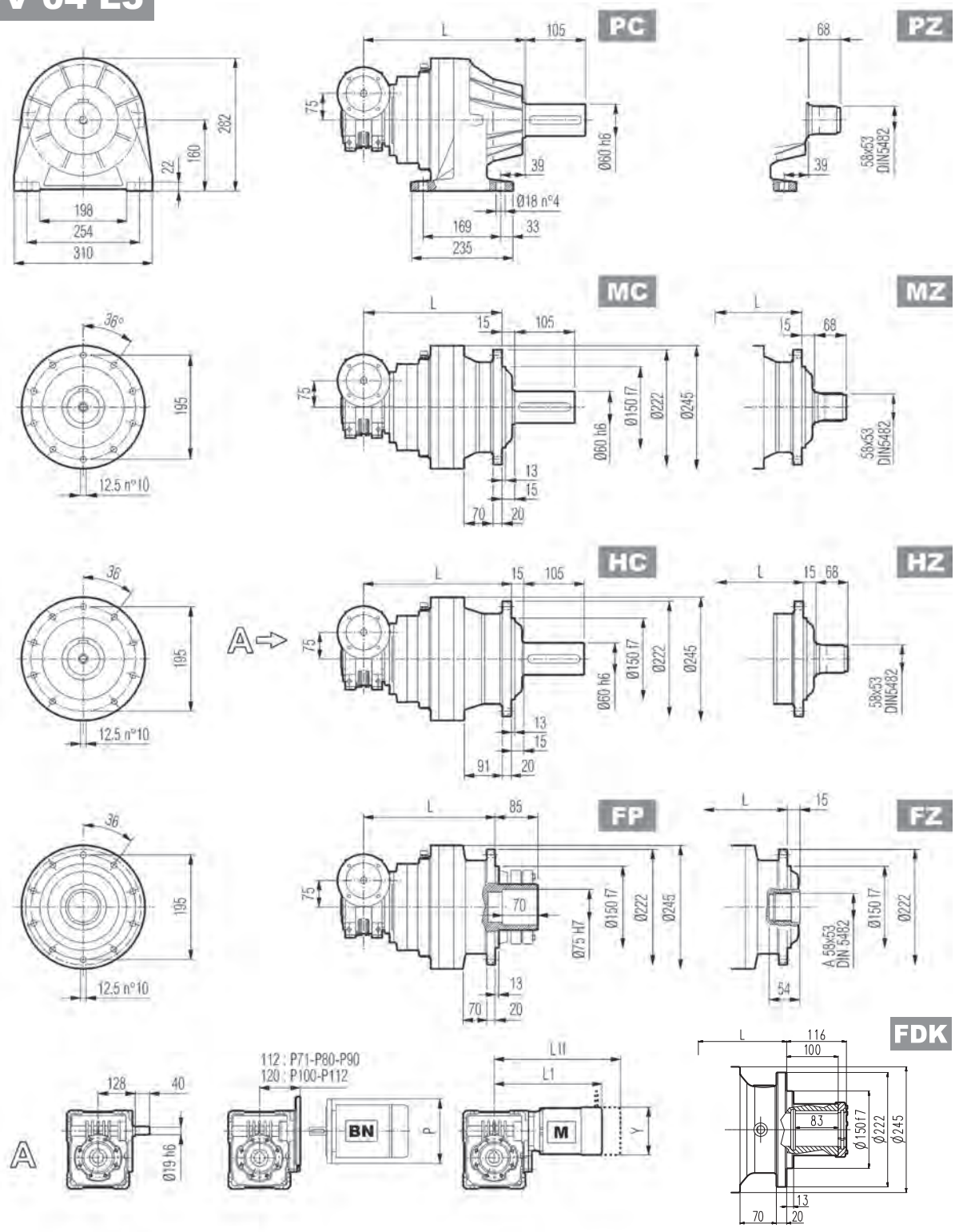

FP M_{2max} = 7300 Nm

	L				Kg				P71	P80	P90	P100
	MC - MZ	PC - PZ	HC - HZ	FP - FZ - FDK	MC - MZ	PC - PZ	HC - HZ	FP - FZ - FDK	P	P	P	P
3/V 04 L3	305	345	330	305	47	56	51	47	160	200	200	250

	S1 + M1			S2 + M2S			S3 + M3S			S3 + M3L		
	L1	L1f	Y	L1	L1f	Y	L1	L1f	Y	L1	L1f	Y
3/V 04 L3	308	369	138	333	409	156	376	472	193	408	499	193

3/A 04 L2

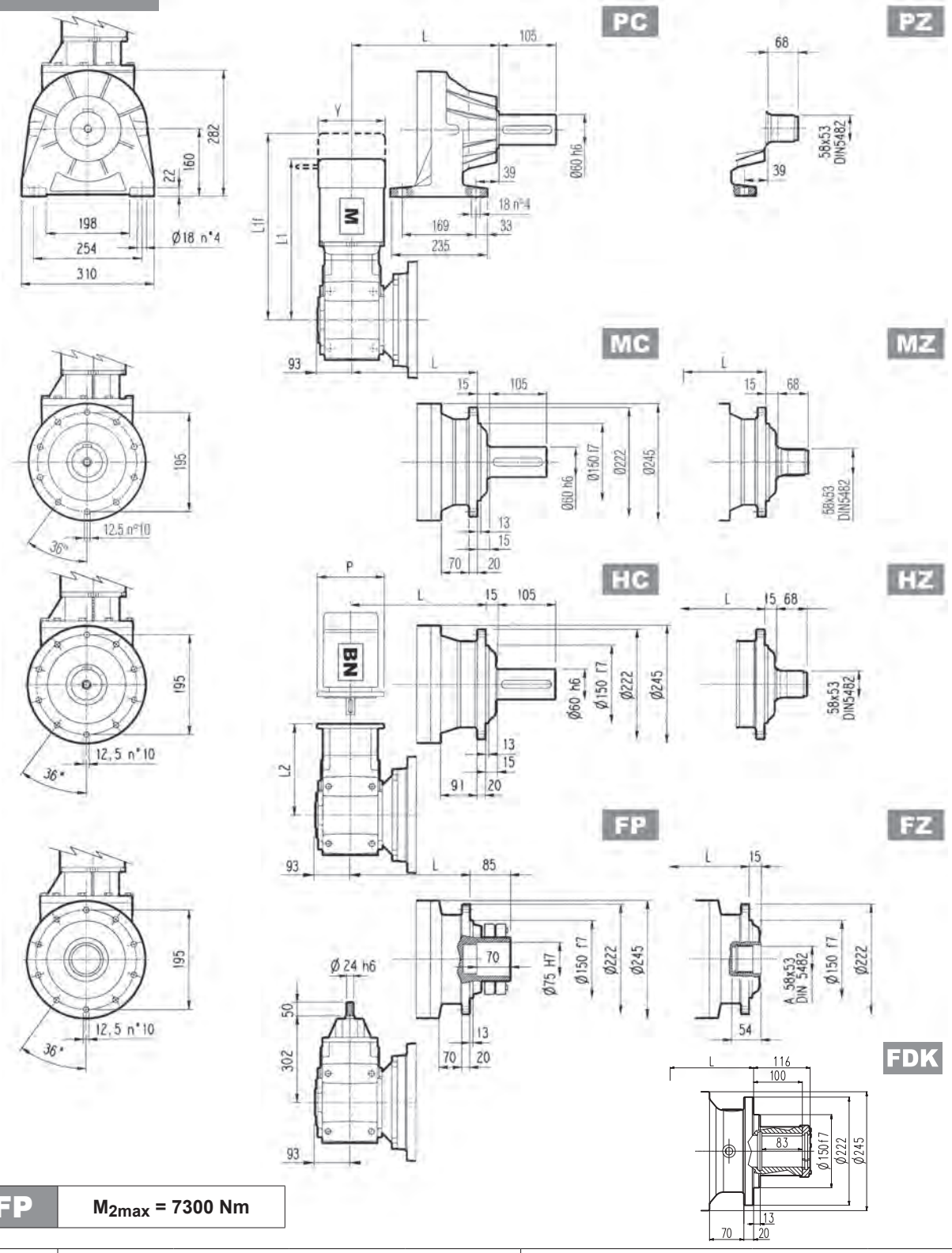

FP M_{2max} = 7300 Nm

	L				Kg			
	MC - MZ	PC - PZ	HC - HZ	FP - FZ - FDK	MC - MZ	PC - PZ	HC - HZ	FP - FZ - FDK
3/A 04 L2	258	298	283	258	80	95	90	80

	P63		P71		P80		P90		P100		P112		P132	
	L2	P	L2	P	L2	P	L2	P	L2	P	L2	P	L2	P
3/A 04 L2	263	140	263	160	282.5	200	282.5	200	292.5	250	292.5	250	329	457

	S1 + M1			S2 + M2S			S3 + M3SA			S3 + M3LA			S4 + M4		
	L1	L1f	Y	L1	L1f	Y	L1	L1f	Y	L1	L1f	Y	L1	L1f	Y
3/A 04 L2	418	439	138	447	517	156	490	487	195	522	538	195	630	738	258

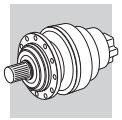

304 L | 304 R | 3/V 04 L3 | 3/A 04 L2

MC HC

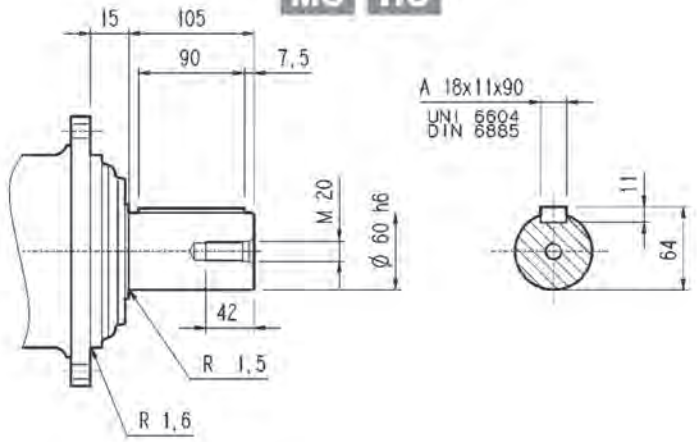

PC

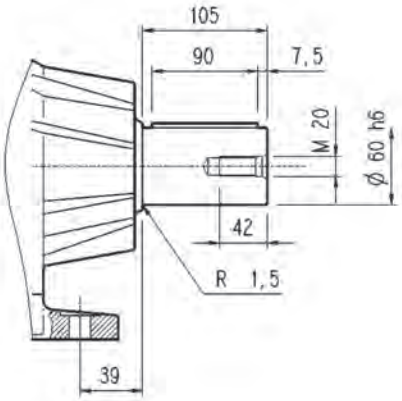

MZ HZ

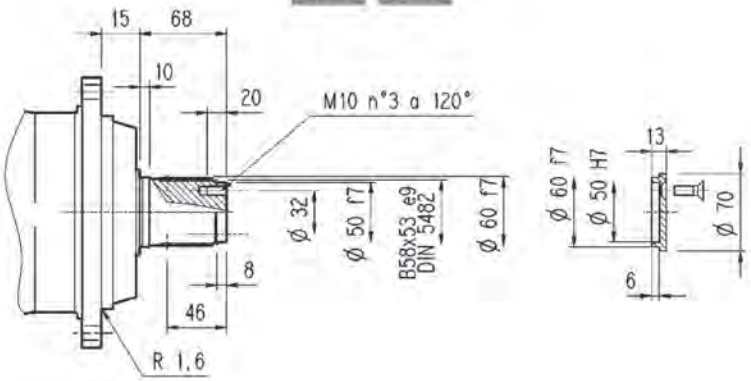

FZ

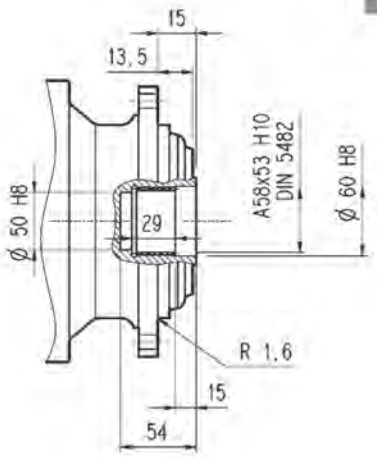

FP

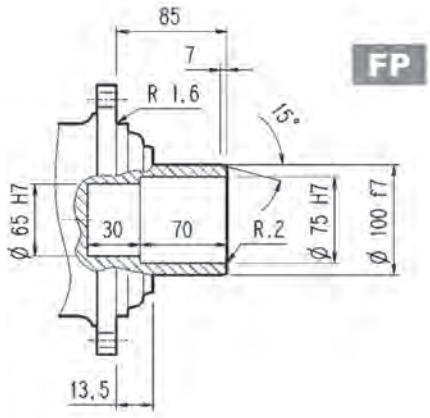

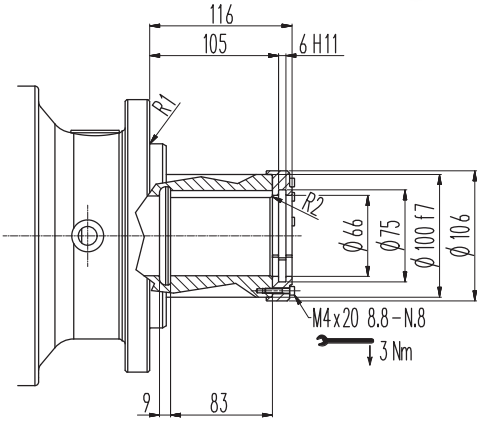

FDK

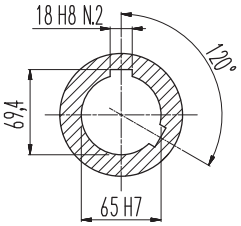

FP	M_{2max} = 7300 Nm

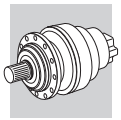

304 L | 304 R | 3/V 04 L3 | 3/A 04 L2

Flange

W0A

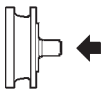

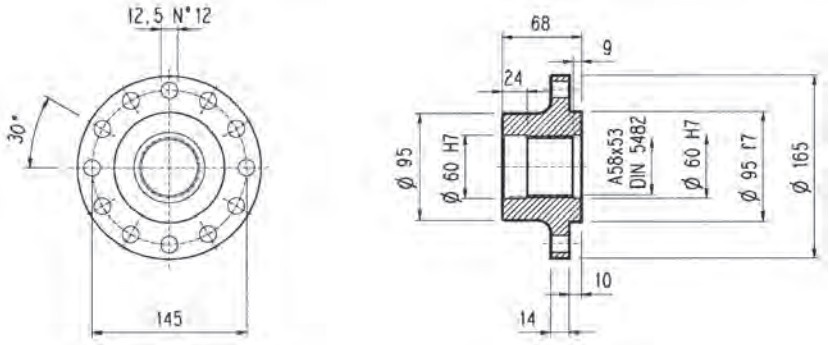

Material: Steel C40

Pinions

P...

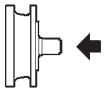

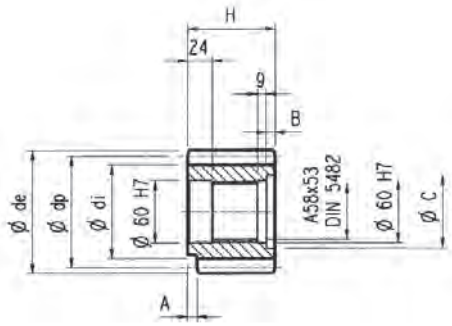

α = 20°

	m	z	x	dp	di	de	H	A	B	C	Material
PCL1	5	19	—	95	82	104	77	12	9	72	Steel 39NiCrMo3 hardened and tempered
PCL2	5	19	—	95	82	104	68	—	—	—	
PCM	5	20	—	100	87.5	110	68	18	—	—	Steel 18NiCrMo5 case hardened
PCP	5	22	—	110	97.5	120	68	18	—	—	
PDE	6	14	0.500	84	75	99.6	68	—	—	—	Steel 39NiCrMo3 hardened and tempered
PDI	6	18	0.500	108	99	123.6	68	—	—	—	
PDM	6	20	0.833	120	115	140	68	—	—	—	
PFD	8	13	0.675	104	95	127.6	68	—	—	—	Steel 18NiCrMo5 case hardened
PFE1	8	14	—	112	92	126	68	—	—	—	
PFE2	8	14	—	112	92	126	80	—	12	72	
PFF	8	15	—	120	100	136	68	—	—	—	Steel 39NiCrMo3 hardened and tempered
PFP	8	22	—	176	156	190	77	12	10	71	
PHG	10	16	0.500	160	145	188	75	—	7	72	

Sleeve coupling

M0A

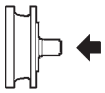

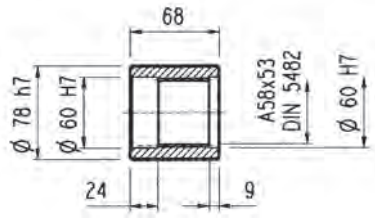

Material: Steel 16CrNi4

Splined bars

B0A

Material: Case hardening steel 18NiCrMo5 UNI 5331
must be case hardened 50-55 HRC

Shrink disc

G0A

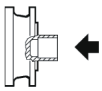

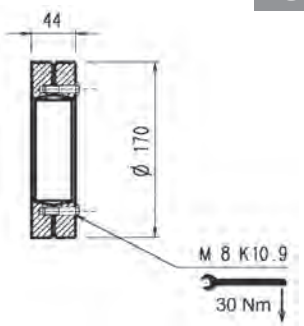

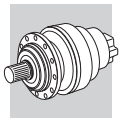

304 L 304 R

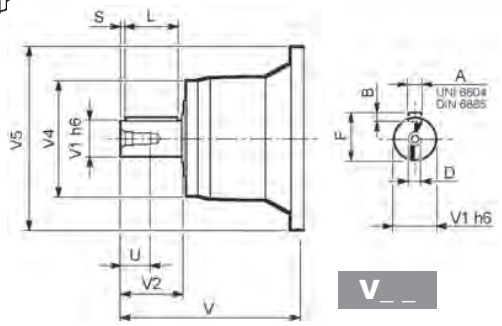

V_ _

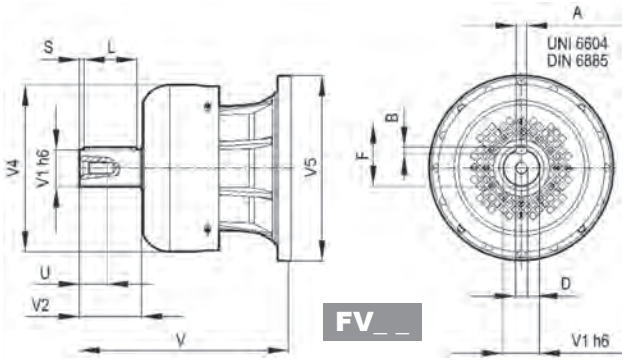

FV_ _

		V	V1	V2	V4	V5	A	B	F	L	S	D	U
304 L1	**V05B**	239	48	82	155	245	14	9	51.5	70	6	M16	36
	FV05B	276	48	82	219.5	244	14	9	51.5	70	6	M16	36
304 L2	**V01A**	137.5	24	36	120	186	8	7	27	30	3	M8	19
	V01B	158	38	58	120	186	10	8	41	50	4	M12	28
304 L3	**V01A**	137.5	24	36	120	186	8	7	27	30	3	M8	19
	V01B	158	38	58	120	186	10	8	41	50	4	M12	28
304 L4	**V01A**	137.5	24	36	120	186	8	7	27	30	3	M8	19
	V01B	158	38	58	120	186	10	8	41	50	4	M12	28
304 R2-R3-R4	**V01A**	137.5	24	36	120	186	8	7	27	30	3	M8	19
	V01B	158	38	58	120	186	10	8	41	50	4	M12	28

304 L 304 R

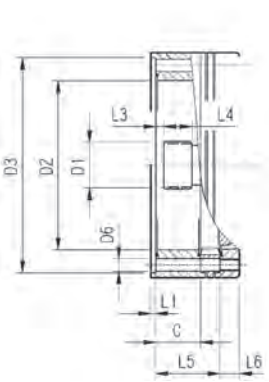

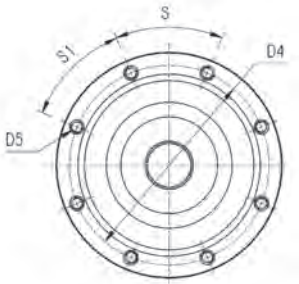

		C	D1	D2	D3	D4	D5	D6	L1	L2	L3	L4	L5	L6	S	S1	Input
304 L1	**V9AA**	37	40x36 DIN5482	140	178 H7	165	M10 n°8	11	4	—	9	18	—	18	45°	45°	A
304 L2	**V9AA**	37	40x36 DIN5482	140	178 H7	165	M10 n°8	11	4	—	9	18	65	18	45°	45°	A
304 L3	**V9AA**	37	40x36 DIN5482	140	178 H7	165	M10 n°8	11	4	—	9	18	118	18	45°	45°	A
304 L4	**V9AA**	37	40x36 DIN5482	140	178 H7	165	M10 n°8	11	4	—	9	18	171	18	45°	45°	A
304 R2-R3-R4	**V9AA**	37	40x36 DIN5482	140	178 H7	165	M10 n°8	11	4	—	9	18	37	18	45°	45°	A

3/V 04 L3

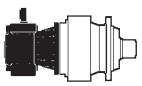

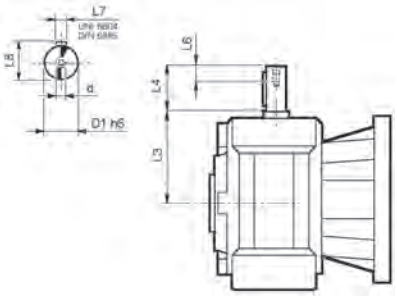

	D1 h6	L3	L4	L6	L7	L8	d
3/V 04 L3_HS	19	128	40	16	6	21.5	M6

3/A 04 L2

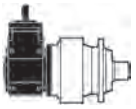

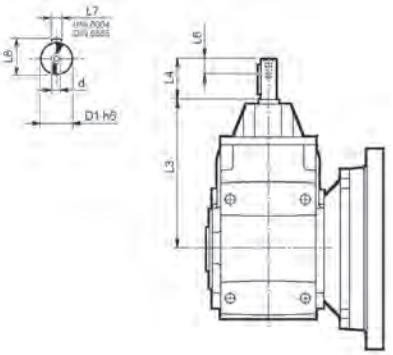

	D1 h6	L3	L4	L6	L7	L8	d
3/A 04 L2_HS	24	302	50	19	8	27	M8

Bonfiglioli Riduttori

Permissible radial and axial loads on output shaft with $Fh_2 : n_2 \cdot h = 100000$

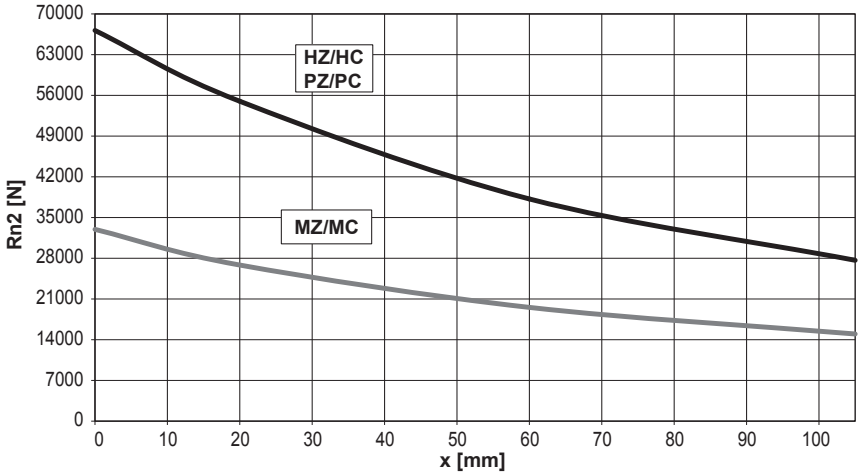

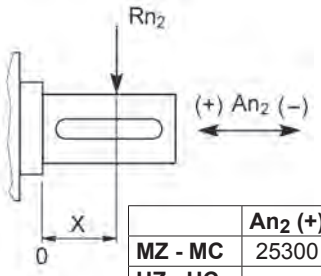

	An2 (+)	An2 (-)
MZ - MC	25300	20240
HZ - HC PZ - PC	27500	22000

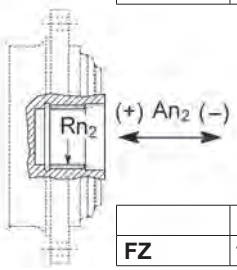

	Rn2	An2 (+/-)
FZ	11140	11604

	$Fh_2 = n_2 \cdot h$	10000	25000	50000	100000	500000	1000000
Load corrective factor fh_2 on shafts	FZ	**2.15**	**1.59**	**1.26**	**1.00**	**0.58**	**0.46**
	fh_2 MZ - MC	**2.15**	**1.59**	**1.26**	**1.00**	**0.58**	**0.46**
	HZ - HC - PZ - PC	**1.48**	**1.48**	**1.23**	**1.00**	**0.62**	**0.50**

Permissible radial loads on input shaft with $Fh_1 : n_1 \cdot h = 250000$

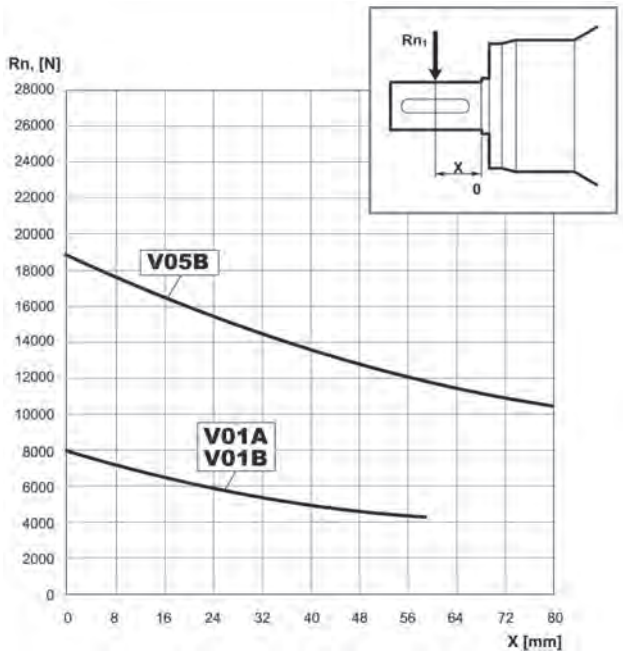

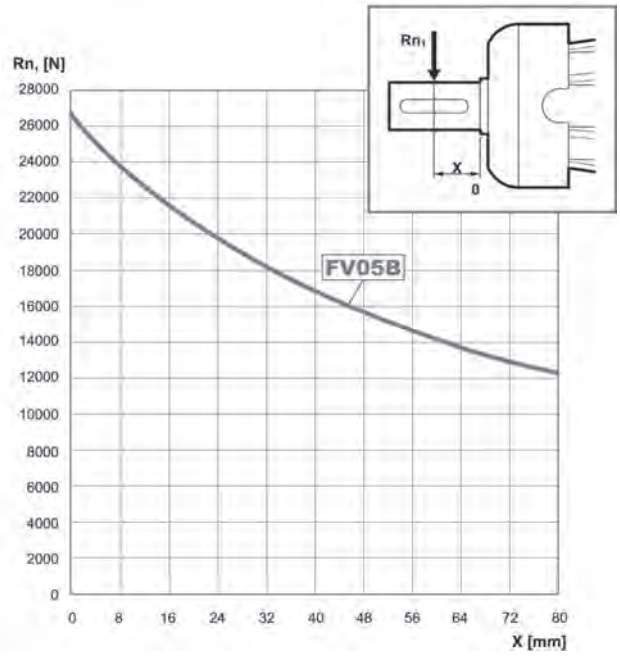

Load corrective factor fh_1 on shafts	$Fh_1 = n_1 \cdot h$	250000	500000	1000000	2000000	5000000	10000000
	fh_1	**1**	**0.79**	**0.63**	**0.50**	**0.37**	**0.29**

304 VK

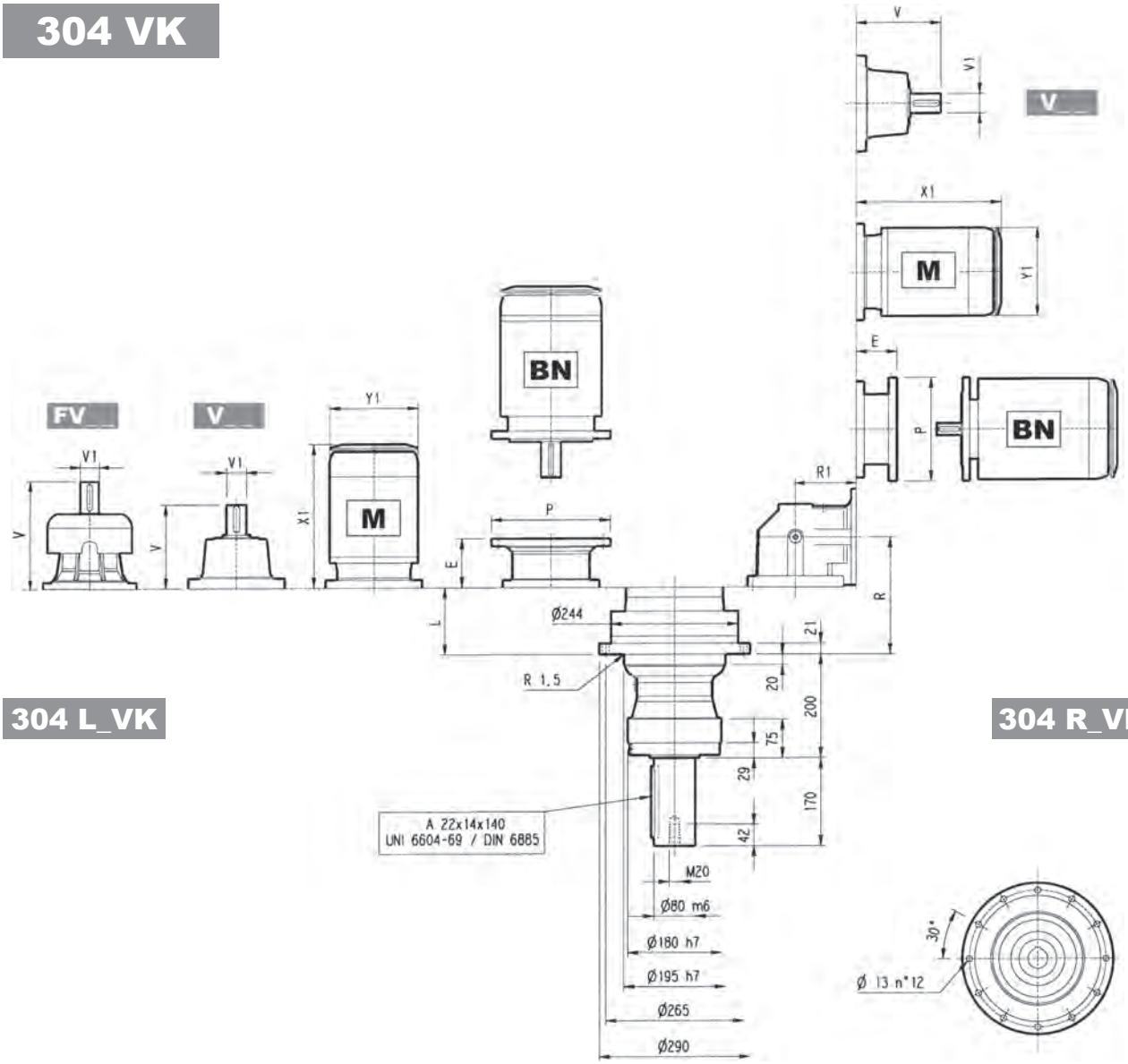

304 L_VK

304 R_VK

	L	Kg	V	V1	Kg	V	V1	Kg	V	V1	Kg	V	V1	Kg	P71		P80		P90		P100		P112		P132		P160		P180		P200	
															E	P	E	P	E	P	E	P	E	P	E	P	E	P	E	P	E	P
304 L1	51	65	239	48	15	—	—	—	276	48	17	—	—	—	—	—	—	—	—	—	—	—	—	—	114	300	144	350	144	350	174	400
304 L2	116	73	137.5	24	6	158	38	7	—	—	—	—	—	—	65	160	84	200	84	200	94	250	94	250	114	300	144	350	—	—	—	—
304 L3	169	76	137.5	24	6	158	38	7	—	—	—	—	—	—	65	160	84	200	84	200	94	250	94	250	114	300	144	350	—	—	—	—
304 L4	222	80	137.5	24	6	158	38	7	—	—	—	—	—	—	65	160	84	200	84	200	94	250	94	250	114	300	144	350	—	—	—	—

	S1 + M1			S2 + M2S			S3 + M3S			S3 + M3L			S4 + M4			S5 + M5S			S5 + M5L		
	X1	X2	Y1	X1	X2	Y1	X1	X2	Y1	X1	X2	Y1	X1	X2	Y1	X1	X2	Y1	X1	X2	Y1
304 L1	—	—	—	—	—	—	—	—	—	—	—	—	460	571	258	552	692	310	596	736	310
304 L2	253	314	138	280	352	156	325	421	195	357	449	195	460	571	258	—	—	—	—	—	—
304 L3	253	314	138	280	352	156	325	421	195	357	449	195	460	571	258	—	—	—	—	—	—
304 L4	253	314	138	280	352	156	325	421	195	357	449	195	460	571	258	—	—	—	—	—	—

	R	R1	Kg	V	V1	Kg	V	V1	Kg	P71		P80		P90		P100		P112		P132	
										E	P	E	P	E	P	E	P	E	P	E	P
304 R2	143	140	85	137.5	24	6	158	38	7	65	160	84	200	84	200	94	250	94	250	114	300
304 R3	208	122	86	137.5	24	6	158	38	7	65	160	84	200	84	200	94	250	94	250	114	300
304 R4	261	122	90	137.5	24	6	158	38	7	65	160	84	200	84	200	94	250	94	250	114	300

	S1 + M1			S2 + M2S			S3 + M3S			S3 + M3L			S4 + M4		
	X1	X2	Y1	X1	X2	Y1	X1	X2	Y1	X1	X2	Y1	X1	X2	Y1
304 R2	—	—	—	328	400	156	373	469	195	405	497	195	508	619	258
304 R3	253	314	138	328	400	156	373	469	195	405	497	195	—	—	—
304 R4	253	314	138	328	400	156	373	469	195	405	497	195	—	—	—

304 VK

The diagram below allows the calculation of permitted overhung load R_{x2} on the output shaft of gearbox, with radial force applying at a distance x from shaft shoulder.
The curves are relevant to value resulting from the relationship of trust load A_{n2} to radial load R_{n2}, based on n_2 = 10 min^{-1} and 10000 hrs theoretical lifetime.

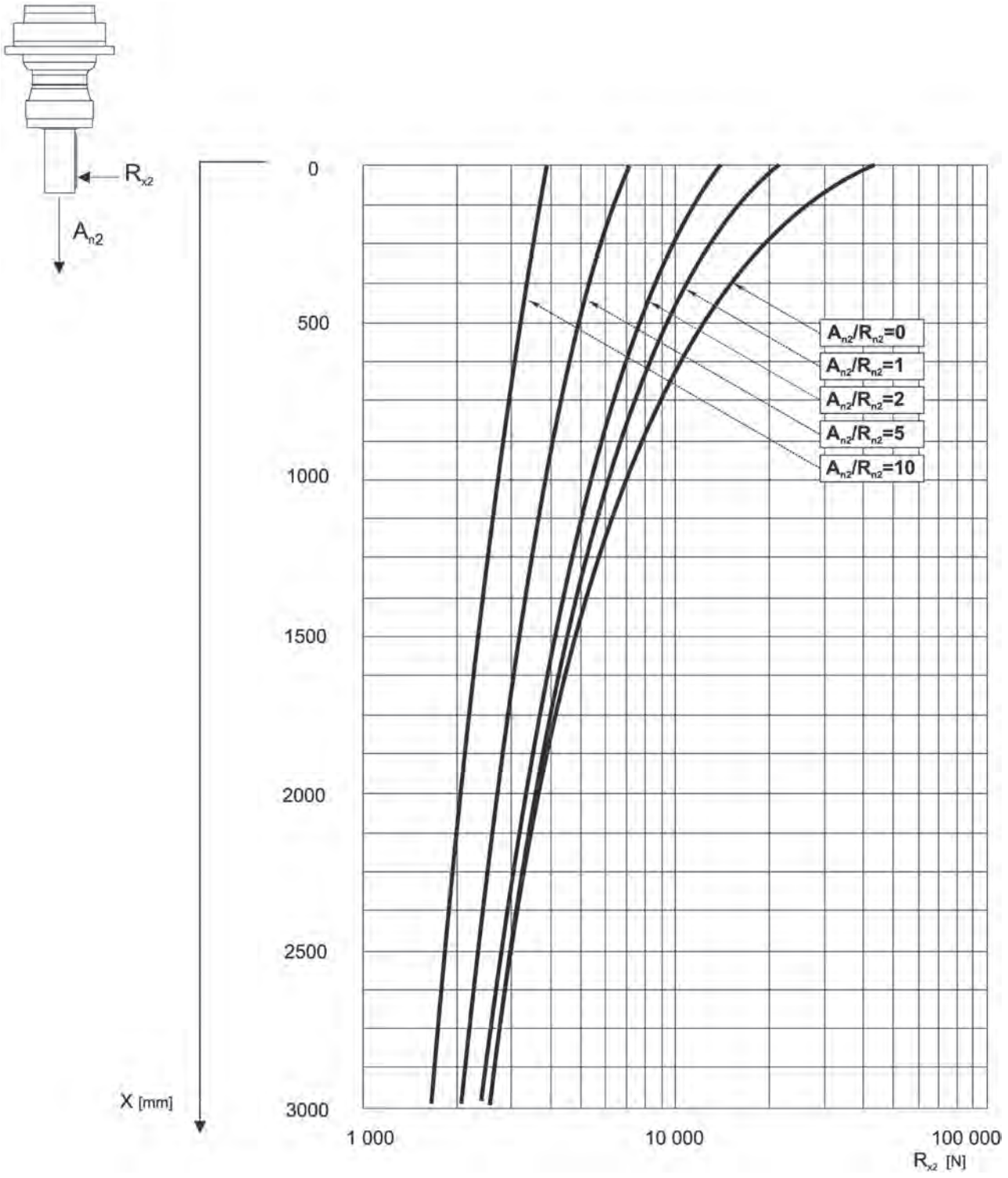

305 L

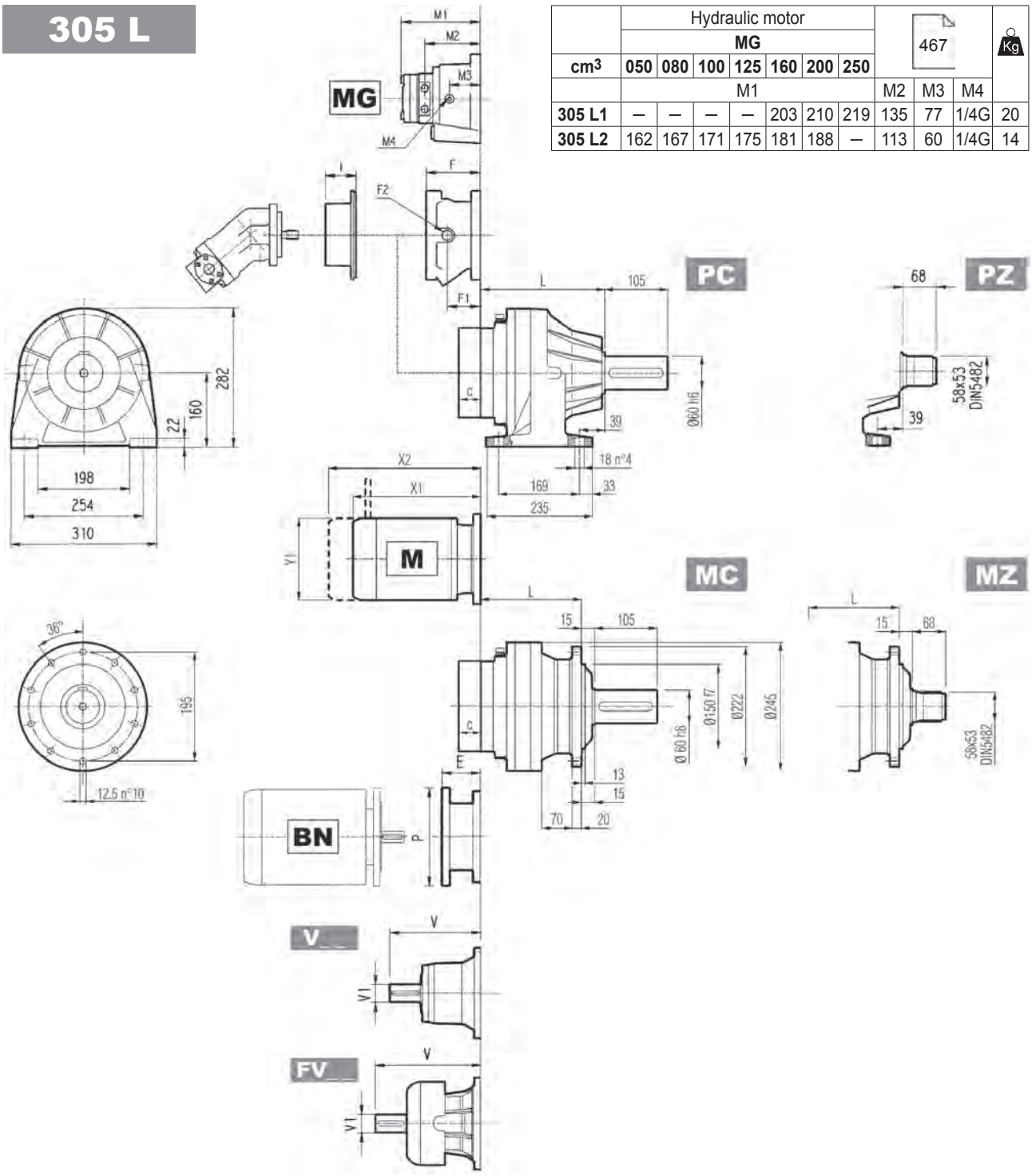

	Hydraulic motor							467			Kg
	MG										
cm³	050	080	100	125	160	200	250				
	M1							M2	M3	M4	
305 L1	—	—	—	—	203	210	219	135	77	1/4G	20
305 L2	162	167	171	175	181	188	—	113	60	1/4G	14

	L				Kg			
	MC - MZ	PC - PZ	HC - HZ	FP - FZ - FDK	MC - MZ	PC - PZ	HC - HZ	FP - FZ - FDK
305 L1	143	183	168	143	36	45	40	36
305 L2	208	248	233	208	43	52	47	43
305 L3	261	301	286	261	47	56	51	47
305 L4	314	354	339	314	51	60	55	51

	V	V1	Kg	V	V1	Kg	V	V1	Kg	V	V1	Kg	C	Input	I	F	F1	F2	Type	Input	Kg
305 L1	239	48	15	—	—	—	276	48	17	—	—	—	37	A	457	145	95	1/4 G	5	A	16
305 L2	137.5	24	6	158	38	7	—	—	—	—	—	—	37	A		105	65	1/4 G	4	A	10
305 L3	137.5	24	6	158	38	7	—	—	—	—	—	—	37	A		105	65	1/4 G	4	A	10
305 L4	137.5	24	6	158	38	7	—	—	—	—	—	—	37	A		105	65	1/4 G	4	A	10

305 L

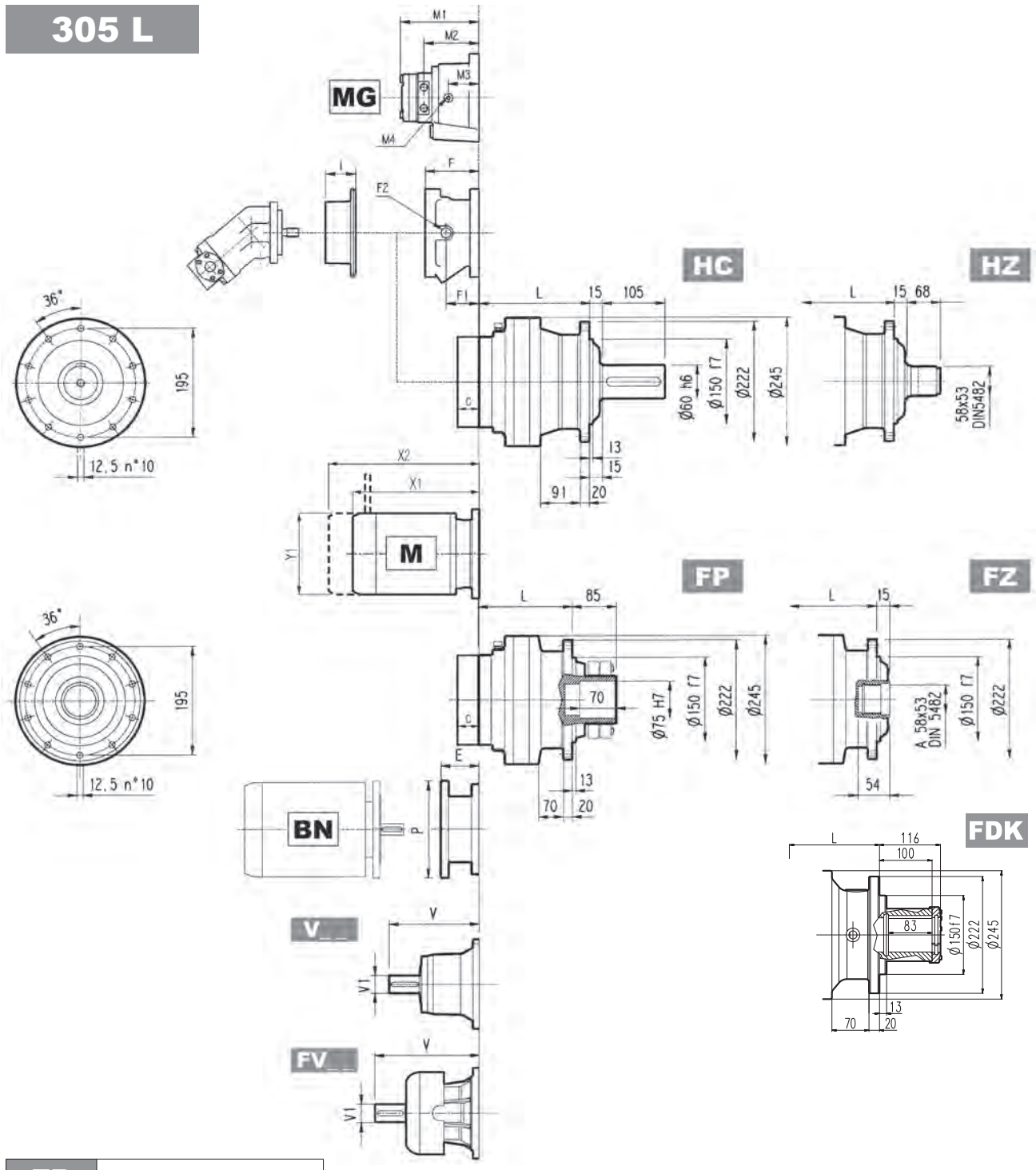

FP M_{2max} = 7500 Nm

	P71		P80		P90		P100		P112		P132		P160		P180		P200	
	E	P	E	P	E	P	E	P	E	P	E	P	E	P	E	P	E	P
305 L1	—	—	—	—	—	—	—	—	—	—	114	300	144	350	144	350	174	400
305 L2	65	160	84	200	84	200	94	250	94	250	114	300	144	350	—	—	—	—
305 L3	65	160	84	200	84	200	94	250	94	250	114	300	144	350	—	—	—	—
305 L4	65	160	84	200	84	200	94	250	94	250	114	300	144	350	—	—	—	—

	S1 + M1			S2 + M2S			S3 + M3S			S3 + M3L			S4 + M4			S5 + M5S			S5 + M5L		
	X1	X2	Y1	X1	X2	Y1	X1	X2	Y1	X1	X2	Y1	X1	X2	Y1	X1	X2	Y1	X1	X2	Y1
305 L1	—	—	—	—	—	—	—	—	—	—	—	—	460	571	258	552	692	310	596	736	310
305 L2	—	—	—	280	352	156	325	421	195	357	449	195	460	571	258	—	—	—	—	—	—
305 L3	253	314	138	280	352	156	325	421	195	357	449	195	460	571	258	—	—	—	—	—	—
305 L4	253	314	138	280	352	156	325	421	195	357	449	195	460	571	258	—	—	—	—	—	—

305 R

	Hydraulic motor							467			Kg
	MG										
cm³	050	080	100	125	160	200	250				
	M1							M2	M3	M4	
305 R2	162	167	171	175	181	188	—	113	60	1/4G	14

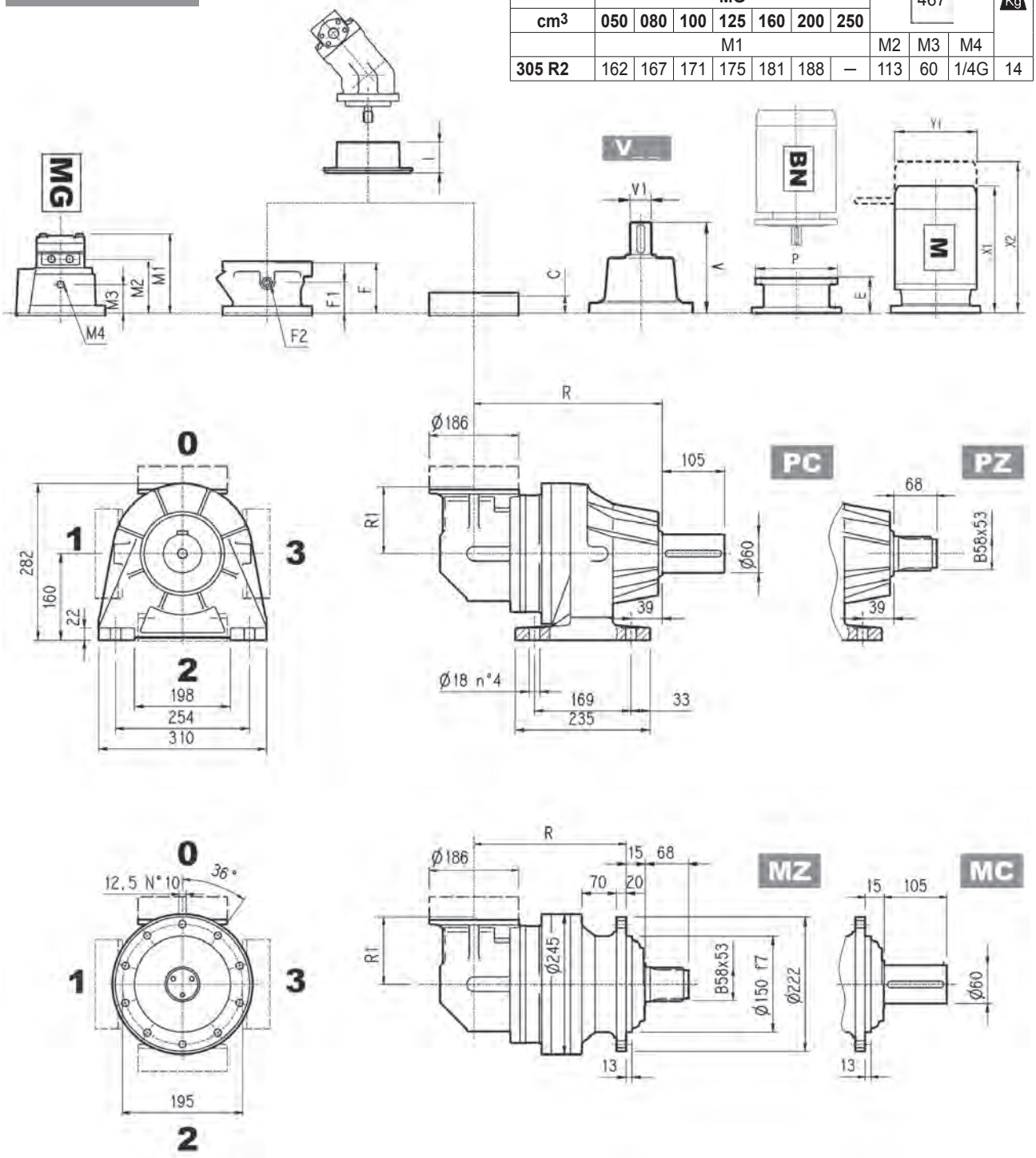

	R				R1	Kg			
	MC - MZ	PC - PZ	HC - HZ	FP - FZ - FDK		MC - MZ	PC - PZ	HC - HZ	FP - FZ - FDK
305 R2	235	375	260	235	140	56	65	60	56
305 R3	300	340	325	300	122	57	66	61	57
305 R4	353	393	378	353	122	61	70	65	61

	V	V1	Kg	V	V1	Kg	C	Input	I	F	F1	F2	Type	Input	Kg
305 R2	137.5	24	6	158	38	7	37	A		105	65	1/4 G	4	A	10
305 R3	137.5	24	6	158	38	7	37	A		105	65	1/4 G	4	A	10
305 R4	137.5	24	6	158	38	7	37	A	457	105	65	1/4 G	4	A	10

305 R

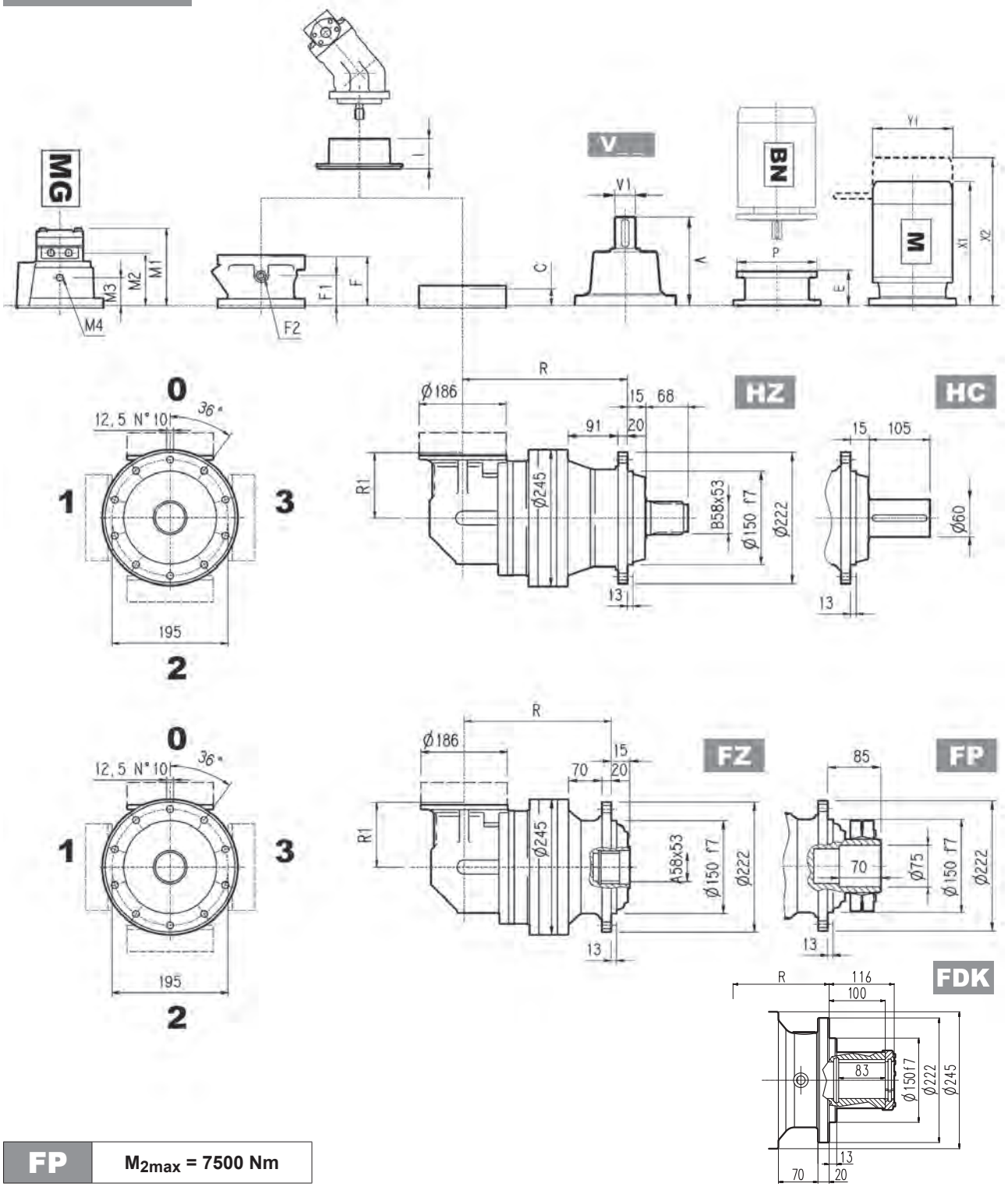

FP M_{2max} = 7500 Nm

	P71		P80		P90		P100		P112		P132	
	E	P	E	P	E	P	E	P	E	P	E	P
305 R2	65	160	84	200	84	200	94	250	94	250	114	300
305 R3	65	160	84	200	84	200	94	250	94	250	114	300
305 R4	65	160	84	200	84	200	94	250	94	250	114	300

	S1 + M1			S2 + M2S			S3 + M3S			S3 + M3L			S4 + M4		
	X1	X2	Y1	X1	X2	Y1	X1	X2	Y1	X1	X2	Y1	X1	X2	Y1
305 R2	—	—	—	328	400	156	373	469	195	405	497	195	508	619	258
305 R3	253	314	138	328	400	156	373	469	195	405	497	195	508	619	258
305 R4	253	314	138	328	400	156	373	469	195	405	497	195	508	619	258

3/V 05 L3

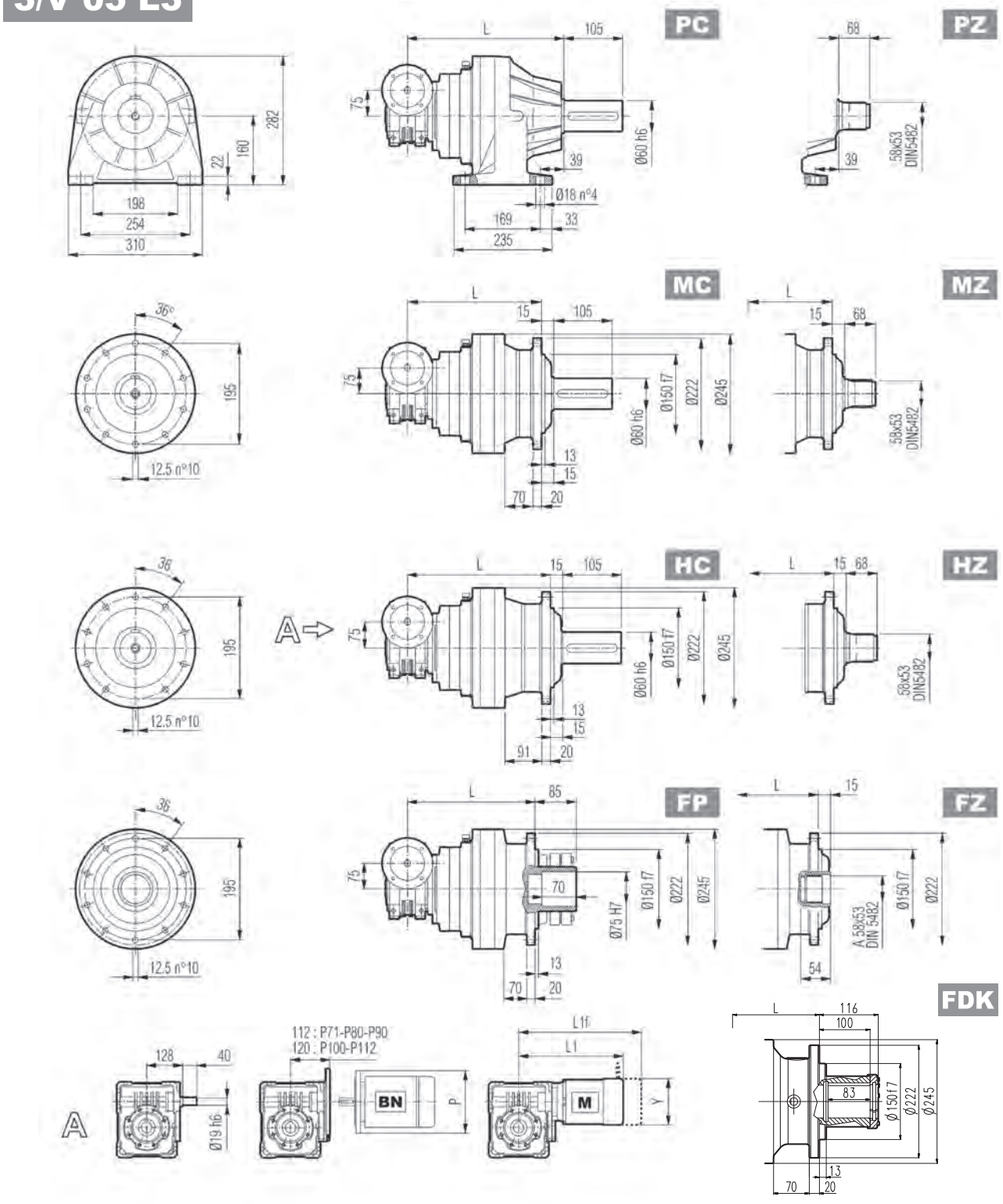

FP M_{2max} = 7500 Nm

	L				Kg				P71	P80	P90	P100
	MC - MZ	PC - PZ	HC - HZ	FP - FZ - FDK	MC - MZ	PC - PZ	HC - HZ	FP - FZ - FDK	P	P	P	P
3/V 05 L3	323	363	348	323	51	60	55	51	160	200	200	250

	S1 + M1			S2 + M2S			S3 + M3S			S3 + M3L		
	L1	L1f	Y	L1	L1f	Y	L1	L1f	Y	L1	L1f	Y
3/V 05 L3	308	369	138	333	409	156	376	472	193	408	499	193

3/A 05 L2

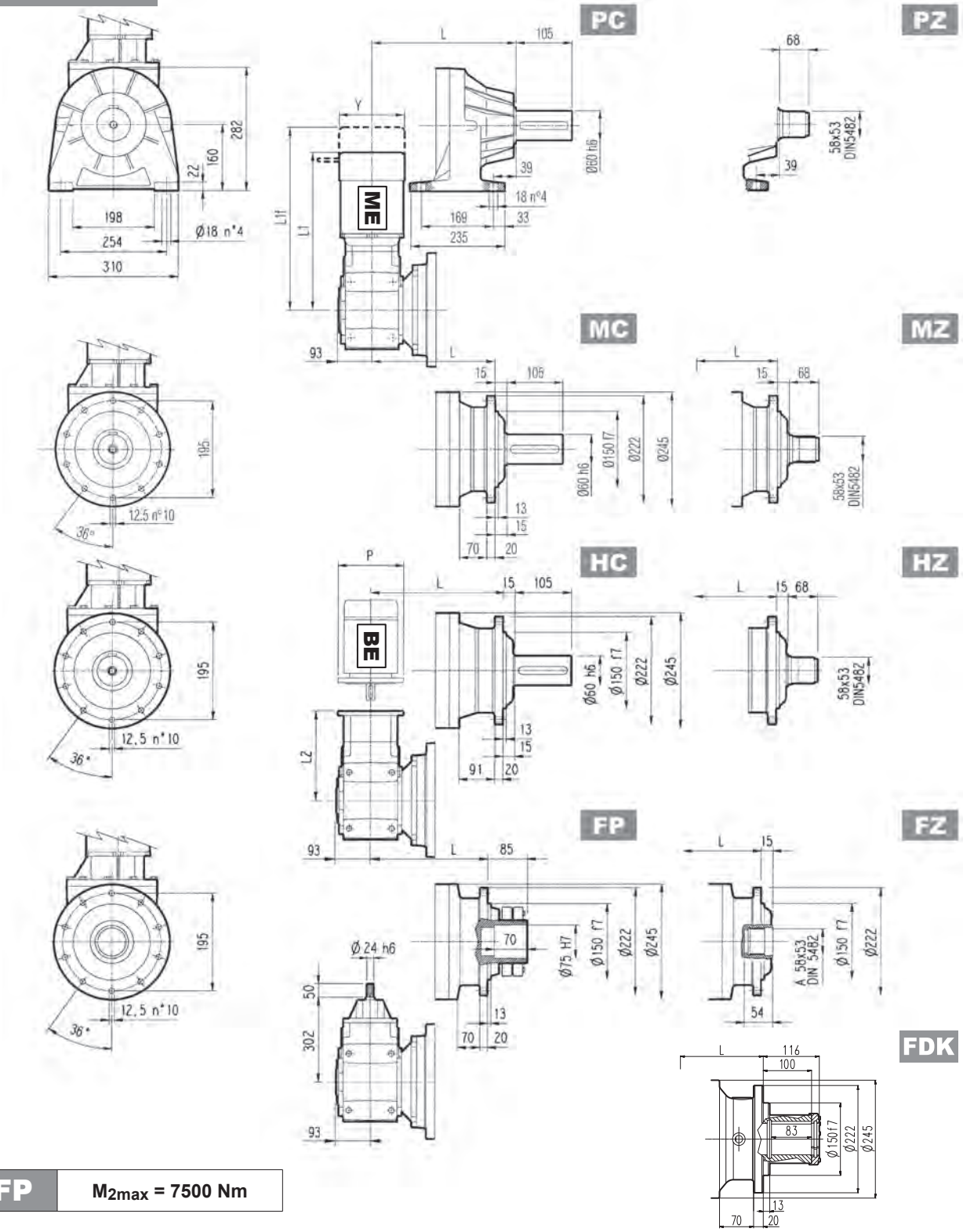

FP	M_{2max} = 7500 Nm

	L				Kg			
	MC - MZ	PC - PZ	HC - HZ	FP - FZ - FDK	MC - MZ	PC - PZ	HC - HZ	FP - FZ - FDK
3/A 05 L2	276	316	301	276	90	105	100	90

	P63		P71		P80		P90		P100		P112		P132	
	L2	P	L2	P	L2	P	L2	P	L2	P	L2	P	L2	P
3/A 05 L2	263	140	263	160	282.5	200	282.5	200	292.5	250	292.5	250	329	457

	S1 + M1			S2 + M2S			S3 + M3SA			S3 + M3LA			S4 + M4		
	L1	L1f	Y	L1	L1f	Y	L1	L1f	Y	L1	L1f	Y	L1	L1f	Y
3/A 05 L2	418	439	138	447	517	156	490	487	195	522	538	195	630	738	258

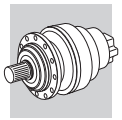

305 L | 305 R | 3/V 05 L3 | 3/A 05 L2

MC HC

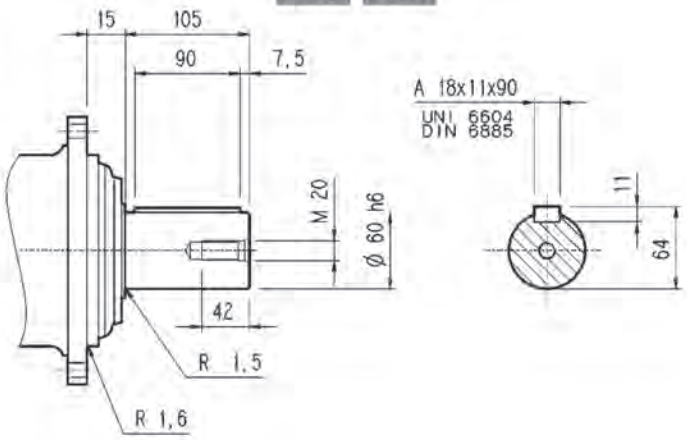

PC

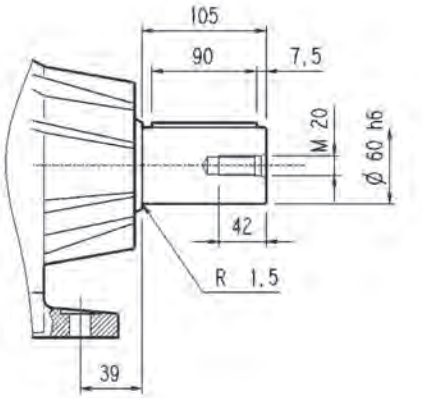

MZ HZ

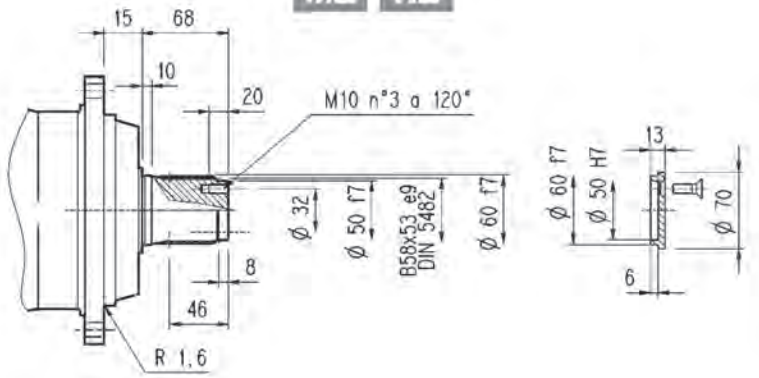

FZ

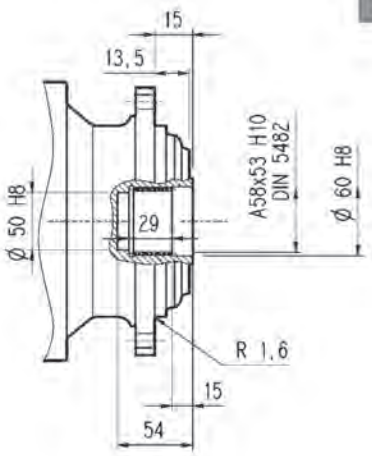

FP

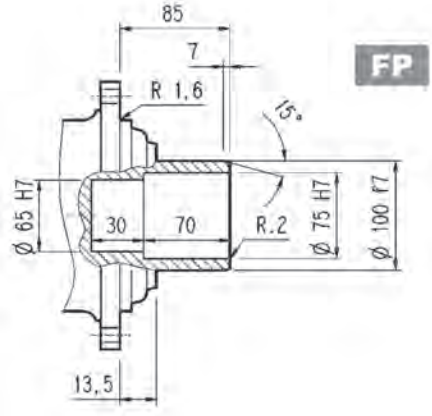

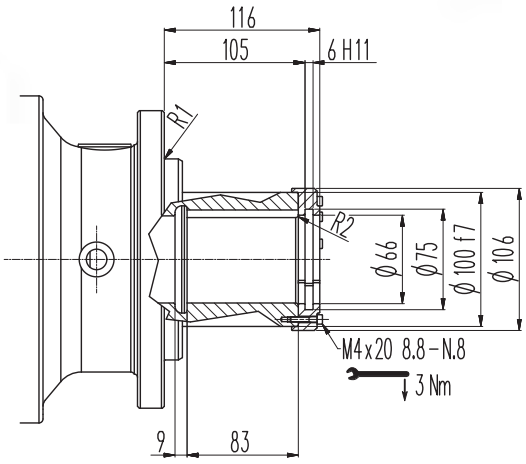

FDK

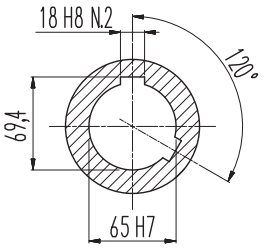

FP	M_{2max} = 7500 Nm

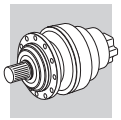

305 L | 305 R | 3/V 05 L3 | 3/A 05 L2

Flange

W0A

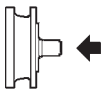

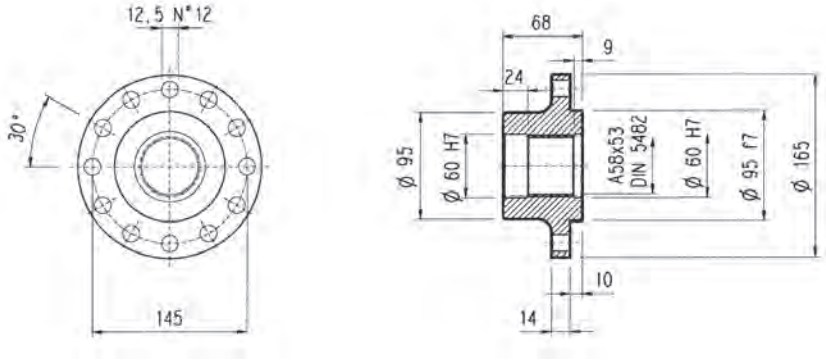

Material: Steel C40

Pinions

P...

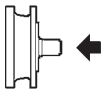

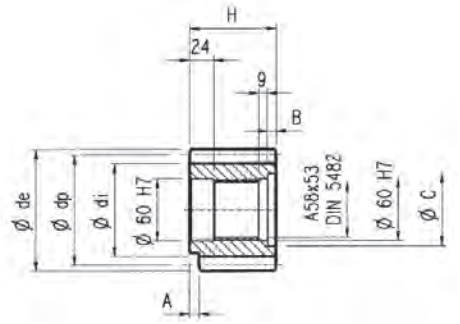

$\alpha = 20°$

	m	z	x	dp	di	de	H	A	B	C	Material
PCL1	5	19	—	95	82	104	77	12	9	72	Steel 39NiCrMo3 hardened and tempered
PCL2	5	19	—	95	82	104	68	—	—	—	
PCM	5	20	—	100	87.5	110	68	18	—	—	Steel 18NiCrMo5 case hardened
PCP	5	22	—	110	97.5	120	68	18	—	—	
PDE	6	14	0.500	84	75	99.6	68	—	—	—	Steel 39NiCrMo3 hardened and tempered
PDI	6	18	0.500	108	99	123.6	68	—	—	—	
PDM	6	20	0.833	120	115	140	68	—	—	—	
PFD	8	13	0.675	104	95	127.6	68	—	—	—	Steel 18NiCrMo5 case hardened
PFE1	8	14	—	112	92	126	68	—	—	—	
PFE2	8	14	—	112	92	126	80	—	12	72	
PFF	8	15	—	120	100	136	68	—	—	—	Steel 39NiCrMo3 hardened and tempered
PFP	8	22	—	176	156	190	77	12	10	71	
PHG	10	16	0.500	160	145	188	75	—	7	72	

Sleeve coupling

M0A

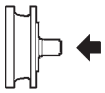

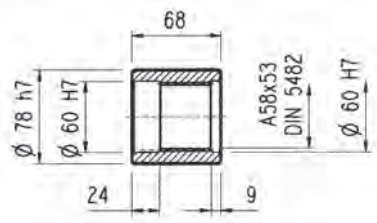

Material: Steel 16CrNi4

Splined bars

B0A

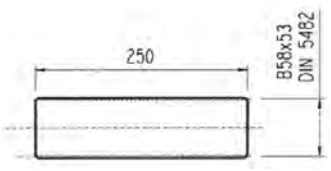

Material: Case hardening steel 18NiCrMo5 UNI 5331
must be case hardened 50-55 HRC

Shrink disc

G0A

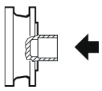

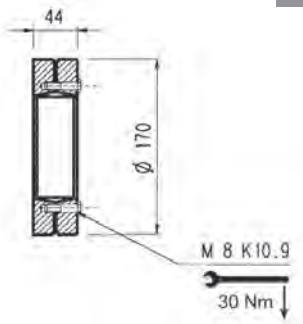

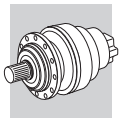

305 L 305 R

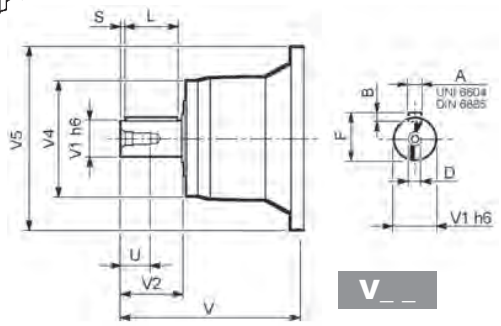

V_ _

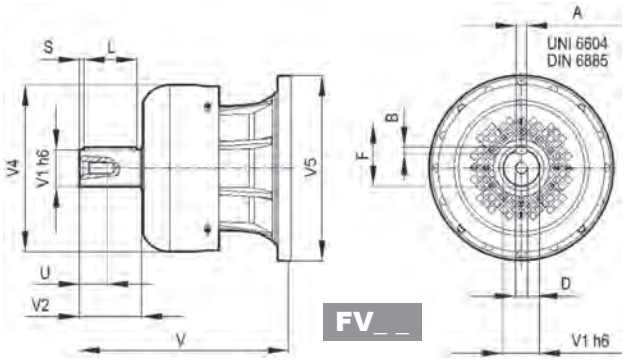

FV_ _

		V	V1	V2	V4	V5	A	B	F	L	S	D	U
305 L1	**V05B**	239	48	82	155	245	14	9	51.5	70	6	M16	36
	FV05B	276	48	82	219.5	244	14	9	51.5	70	6	M16	36
305 L2	**V01A**	137.5	24	36	120	186	8	7	27	30	3	M8	19
	V01B	158	38	58	120	186	10	8	41	50	4	M12	28
305 L3	**V01A**	137.5	24	36	120	186	8	7	27	30	3	M8	19
	V01B	158	38	58	120	186	10	8	41	50	4	M12	28
305 L4	**V01A**	137.5	24	36	120	186	8	7	27	30	3	M8	19
	V01B	158	38	58	120	186	10	8	41	50	4	M12	28
305 R2-R3-R4	**V01A**	137.5	24	36	120	186	8	7	27	30	3	M8	19
	V01B	158	38	58	120	186	10	8	41	50	4	M12	28

305 L 305 R

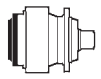

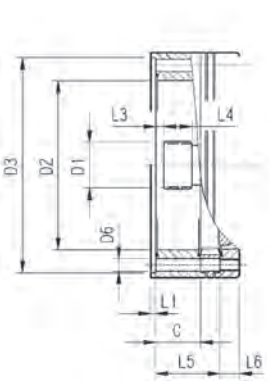

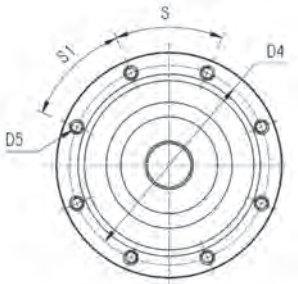

		C	D1	D2	D3	D4	D5	D6	L1	L2	L3	L4	L5	L6	S	S1	Input
305 L1	**V9AA**	37	40x36 DIN5482	140	178 H7	165	M10 n°8	11	4	—	9	18	—	18	45°	45°	A
305 L2	**V9AA**	37	40x36 DIN5482	140	178 H7	165	M10 n°8	11	4	—	9	18	65	18	45°	45°	A
305 L3	**V9AA**	37	40x36 DIN5482	140	178 H7	165	M10 n°8	11	4	—	9	18	118	18	45°	45°	A
305 L4	**V9AA**	37	40x36 DIN5482	140	178 H7	165	M10 n°8	11	4	—	9	18	171	18	45°	45°	A
305 R2-R3-R4	**V9AA**	37	40x36 DIN5482	140	178 H7	165	M10 n°8	11	4	—	9	18	37	18	45°	45°	A

3/V 05 L3

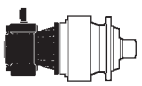

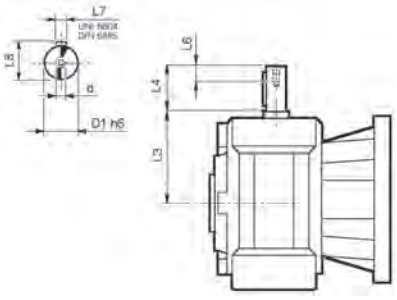

	D1 h6	L3	L4	L6	L7	L8	d
3/V 05 L3_HS	19	128	40	16	6	21.5	M6

3/A 05 L2

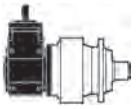

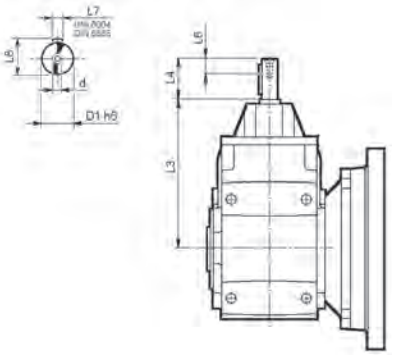

	D1 h6	L3	L4	L6	L7	L8	d
3/A 05 L2_HS	24	302	50	19	8	27	M8

Bonfiglioli Riduttori

Permissible radial and axial loads on output shaft with $Fh_2 : n_2 \cdot h = 100000$

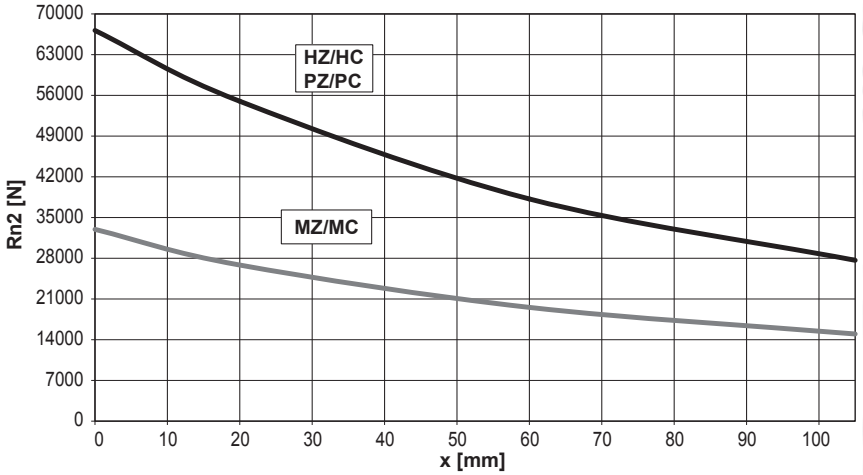

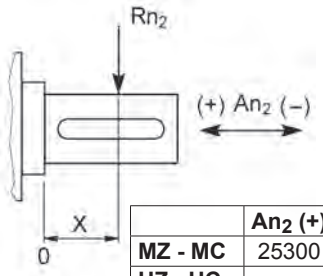

	An2 (+)	An2 (-)
MZ - MC	25300	20240
HZ - HC PZ - PC	27500	22000

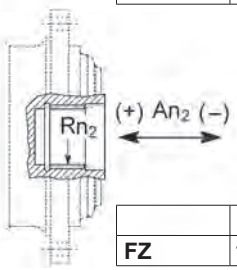

	Rn2	An2 (+/-)
FZ	11140	11604

	$Fh_2 = n_2 \cdot h$	10000	25000	50000	100000	500000	1000000
Load corrective factor fh_2 on shafts	FZ	**2.15**	**1.59**	**1.26**	**1.00**	**0.58**	**0.46**
	fh_2 MZ - MC	**2.15**	**1.59**	**1.26**	**1.00**	**0.58**	**0.46**
	HZ - HC - PZ - PC	**1.48**	**1.48**	**1.23**	**1.00**	**0.62**	**0.50**

Permissible radial loads on input shaft with $Fh_1 : n_1 \cdot h = 250000$

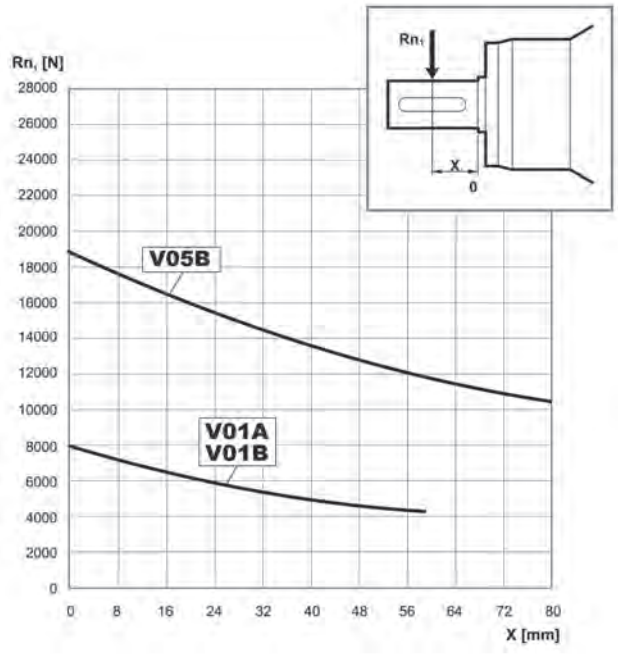

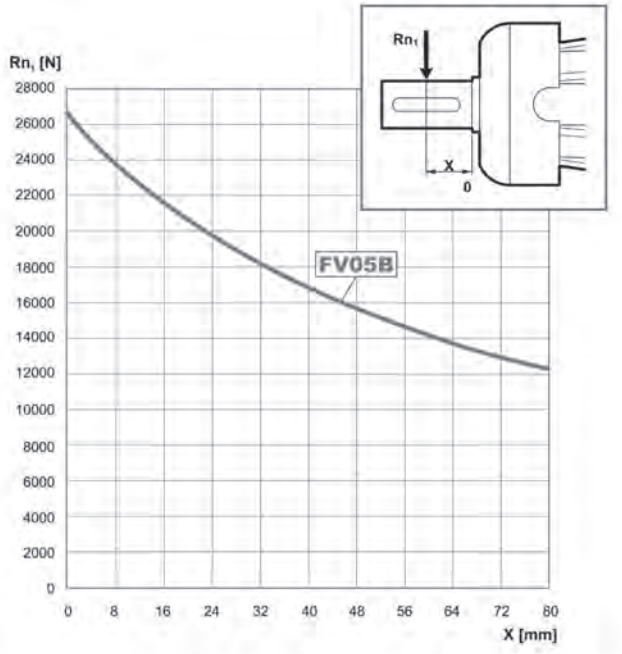

	$Fh_1 = n_1 \cdot h$	250000	500000	1000000	2000000	5000000	10000000
Load corrective factor fh_1 on shafts	fh_1	**1**	**0.79**	**0.63**	**0.50**	**0.37**	**0.29**

305 VK

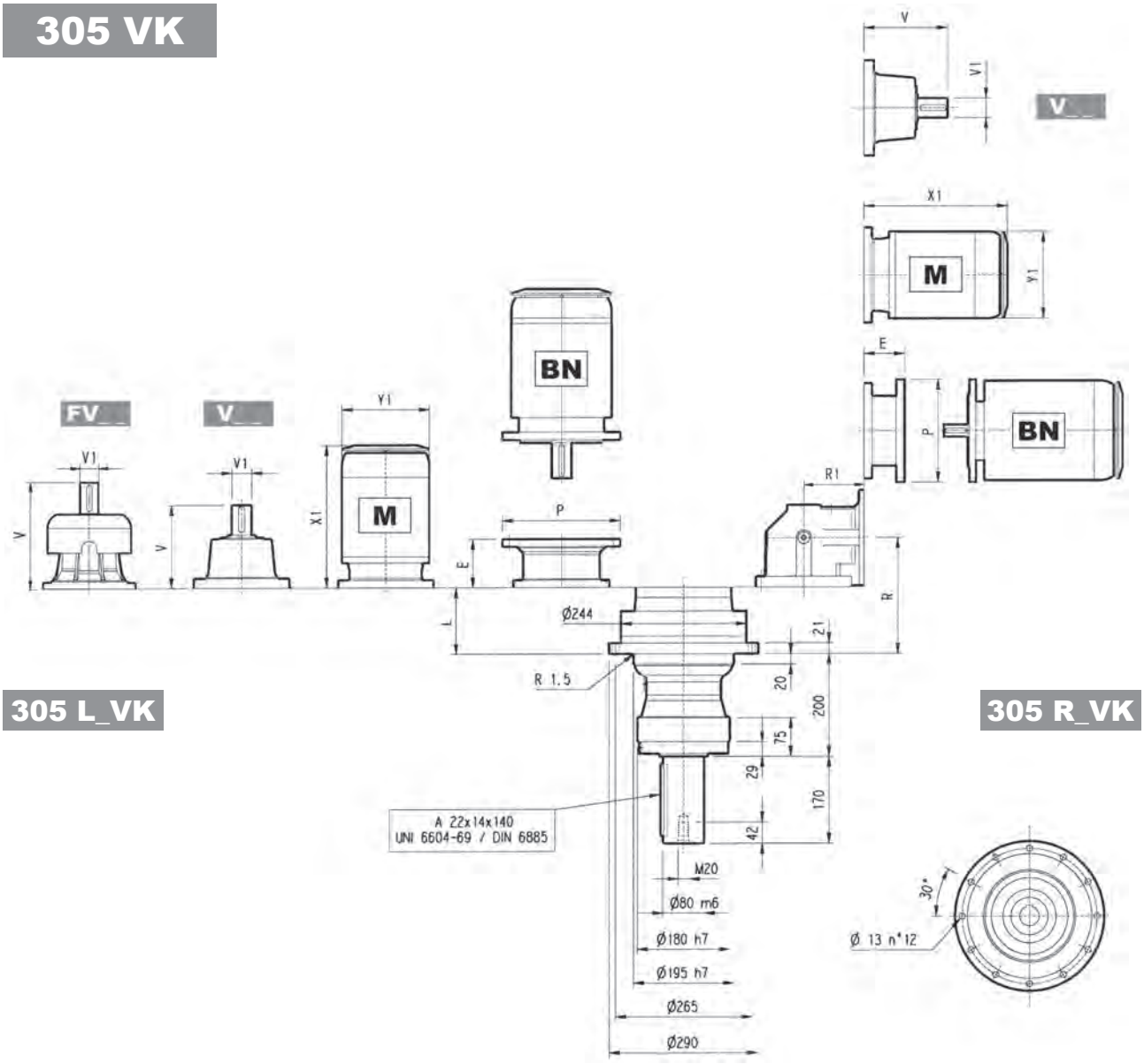

305 L_VK

305 R_VK

	L	Kg	V	V1	Kg	V	V1	Kg	V	V1	Kg	V	V1	Kg	P71		P80		P90		P100		P112		P132		P160		P180		P200	
															E	P	E	P	E	P	E	P	E	P	E	P	E	P	E	P	E	P
305 L1	69	70	239	48	15	—	—	—	276	48	17	—	—	—	—	—	—	—	—	—	—	—	—	—	114	300	144	350	144	350	174	400
305 L2	134	77	137.5	24	6	158	38	7	—	—	—	—	—	—	65	160	84	200	84	200	94	250	94	250	114	300	144	350	—	—	—	—
305 L3	187	81	137.5	24	6	158	38	7	—	—	—	—	—	—	65	160	84	200	84	200	94	250	94	250	114	300	144	350	—	—	—	—
305 L4	240	85	137.5	24	6	158	38	7	—	—	—	—	—	—	65	160	84	200	84	200	94	250	94	250	114	300	144	350	—	—	—	—

	S1 + M1			S2 + M2S			S3 + M3S			S3 + M3L			S4 + M4			S5 + M5S			S5 + M5L		
	X1	X2	Y1	X1	X2	Y1	X1	X2	Y1	X1	X2	Y1	X1	X2	Y1	X1	X2	Y1	X1	X2	Y1
305 L1	—	—	—	—	—	—	—	—	—	—	—	—	460	571	258	552	692	310	596	736	310
305 L2	—	—	—	280	352	156	325	421	195	357	449	195	460	571	258	—	—	—	—	—	—
305 L3	253	314	138	280	352	156	325	421	195	357	449	195	460	571	258	—	—	—	—	—	—
305 L4	253	314	138	280	352	156	325	421	195	357	449	195	460	571	258	—	—	—	—	—	—

	R	R1	Kg	V	V1	Kg	V	V1	Kg	P71		P80		P90		P100		P112		P132	
										E	P	E	P	E	P	E	P	E	P	E	P
305 R2	161	140	90	137.5	24	6	158	38	7	65	160	84	200	84	200	94	250	94	250	114	300
305 R3	226	122	92	137.5	24	6	158	38	7	65	160	84	200	84	200	94	250	94	250	114	300
305 R4	279	122	95	137.5	24	6	158	38	7	65	160	84	200	84	200	94	250	94	250	114	300

	S1 + M1			S2 + M2S			S3 + M3S			S3 + M3L			S4 + M4		
	X1	X2	Y1	X1	X2	Y1	X1	X2	Y1	X1	X2	Y1	X1	X2	Y1
305 R2	—	—	—	328	400	156	373	469	195	405	497	195	508	619	258
305 R3	253	314	138	328	400	156	373	469	195	405	497	195	508	619	258
305 R4	253	314	138	328	400	156	373	469	195	405	497	195	508	619	258

305 VK

The diagram below allows the calculation of permitted overhung load R_{x2} on the output shaft of gearbox, with radial force applying at a distance x from shaft shoulder.
The curves are relevant to value resulting from the relationship of trust load A_{n2} to radial load R_{n2}, based on n_2 = 10 min^{-1} and 10000 hrs theoretical lifetime.

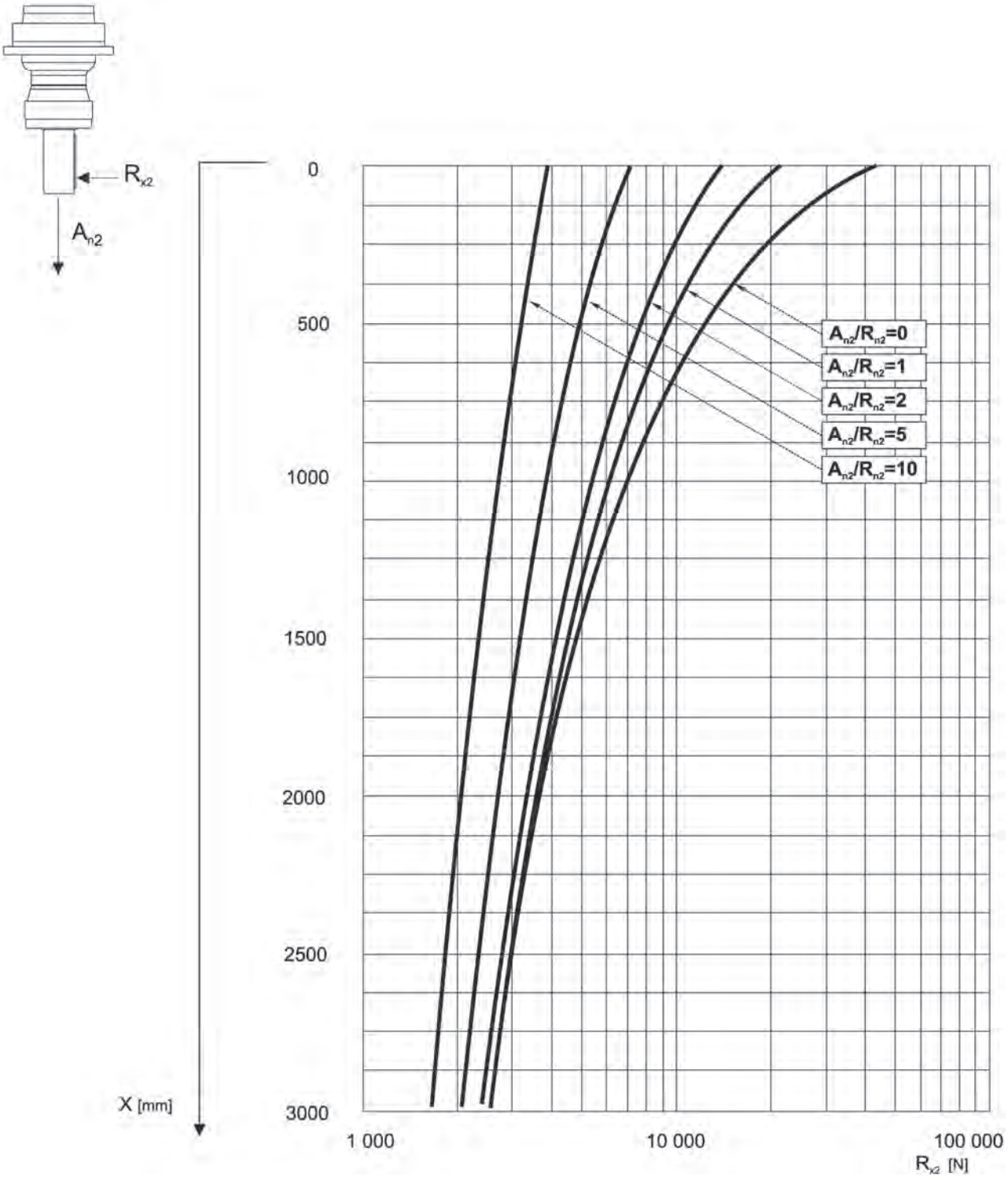

306 L

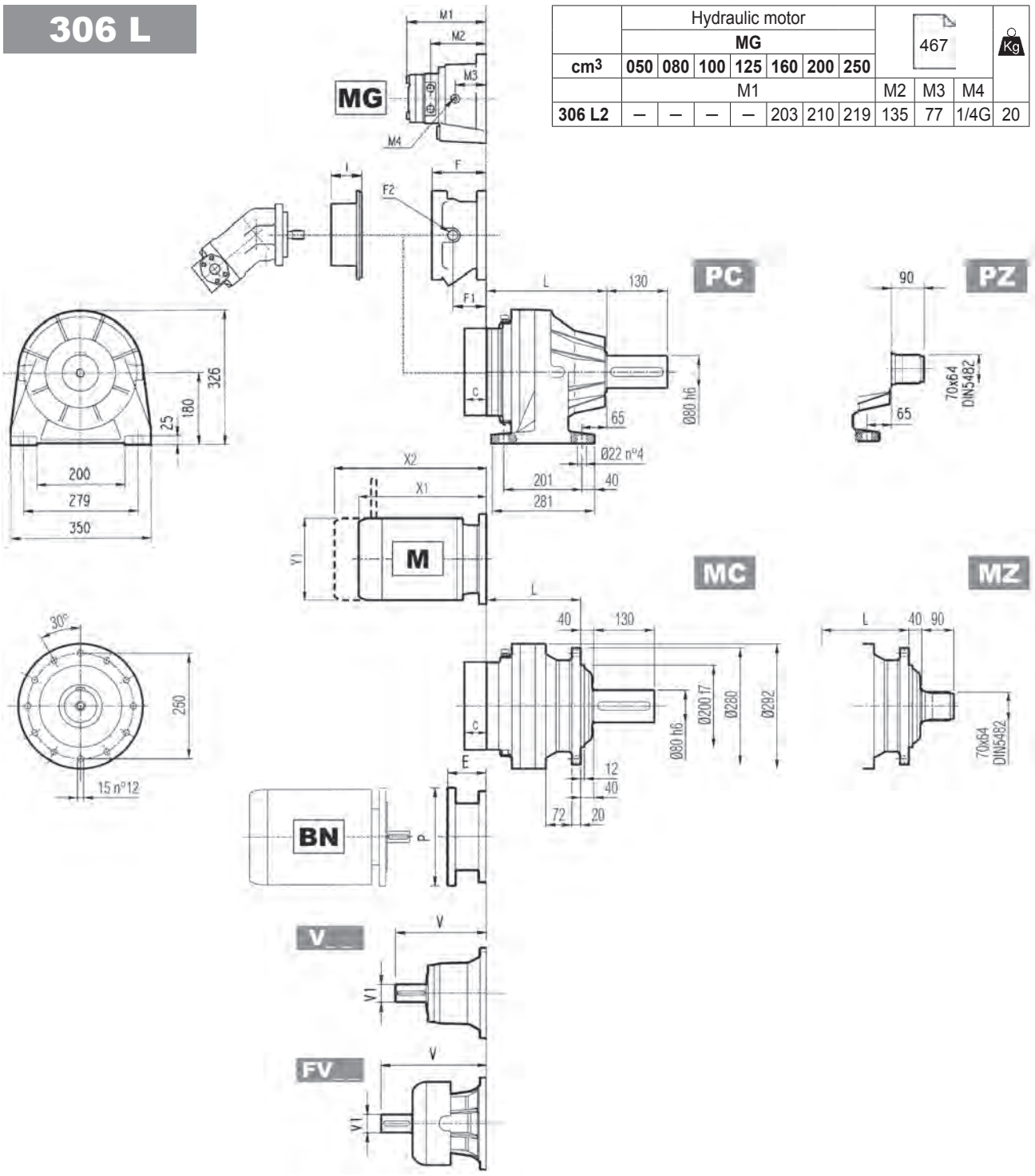

	Hydraulic motor							467			Kg
	MG										
cm³	050	080	100	125	160	200	250				
	M1							M2	M3	M4	
306 L2	–	–	–	–	203	210	219	135	77	1/4G	20

	L				Kg			
	MC - MZ	PC - PZ	HC - HZ	FP - FZ - FDK	MC - MZ	PC - PZ	HC - HZ	FP - FZ - FDK
306 L1	160	235	195	160	65	85	70	65
306 L2	225	300	260	225	74	95	79	74
306 L3	278	353	313	278	78	98	83	78
306 L4	331	406	366	331	82	103	87	82

	V	V1	Kg	V	V1	Kg	V	V1	Kg	V	V1	Kg	C	Input	I	F	F1	F2	Type	Input	Kg
306 L1	307	60	23	—	—	—	357	60	28	—	—	—	45	B		195	147	1/4 G	6	B	28
306 L2	239	48	15	—	—	—	276	48	17	—	—	—	37	A		145	95	1/4 G	5	A	16
306 L3	137.5	24	6	158	38	7	—	—	—	—	—	—	37	A	457	105	65	1/4 G	4	A	10
306 L4	137.5	24	6	158	38	7	—	—	—	—	—	—	37	A		105	65	1/4 G	4	A	10

306 L

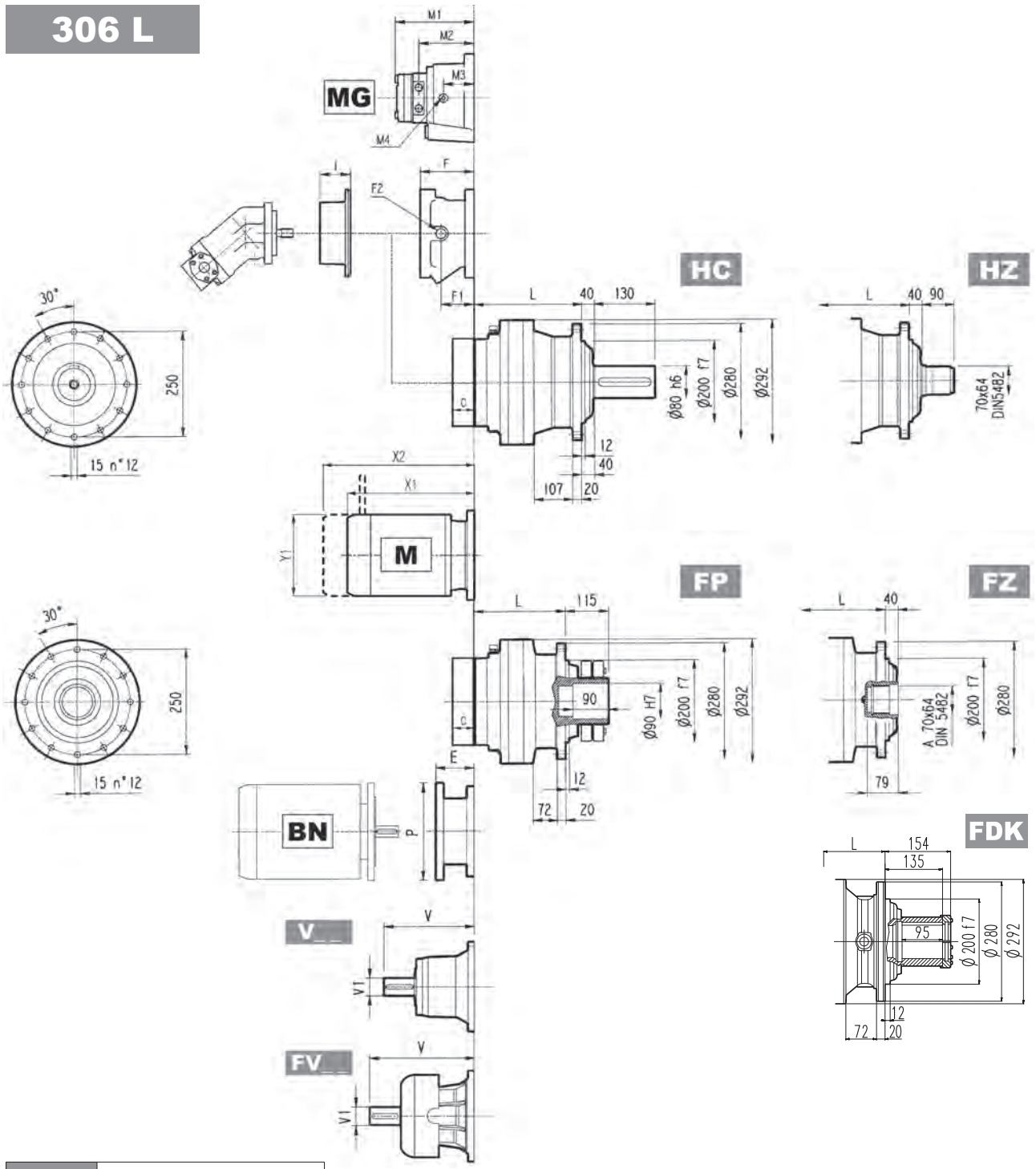

FP M_{2max} = 12000 Nm

	P71		P80		P90		P100		P112		P132		P160		P180		P200		P225		P250	
	E	P	E	P	E	P	E	P	E	P	E	P	E	P	E	P	E	P	E	P	E	P
306 L1	—	—	—	—	—	—	—	—	—	—	—	—	144	350	153	350	183	400	212	450	193	550
306 L2	—	—	—	—	—	—	—	—	—	—	114	300	144	350	144	350	174	400	—	—	—	—
306 L3	65	160	84	200	84	200	94	250	94	250	114	300	144	350	—	—	—	—	—	—	—	—
306 L4	65	160	84	200	84	200	94	250	94	250	114	300	144	350	—	—	—	—	—	—	—	—

	S1 + M1			S2 + M2S			S3 + M3S			S3 + M3L			S4 + M4			S5 + M5S			S5 + M5L		
	X1	X2	Y1	X1	X2	Y1	X1	X2	Y1	X1	X2	Y1	X1	X2	Y1	X1	X2	Y1	X1	X2	Y1
306 L1	—	—	—	—	—	—	—	—	—	—	—	—	—	—	—	—	—	—	—	—	—
306 L2	—	—	—	—	—	—	—	—	—	—	—	—	460	571	258	552	692	310	596	736	310
306 L3	253	314	138	280	352	156	325	421	195	357	449	195	460	571	258	—	—	—	—	—	—
306 L4	253	314	138	280	352	156	325	421	195	357	449	195	460	571	258	—	—	—	—	—	—

306 R

	Hydraulic motor							467			Kg
	MG										
cm³	050	080	100	125	160	200	250				
	M1							M2	M3	M4	
306 R2	–	167	171	175	181	188	197	113	60	1/4G	14
306 R3	162	167	171	175	181	–	–	113	60	1/4G	14

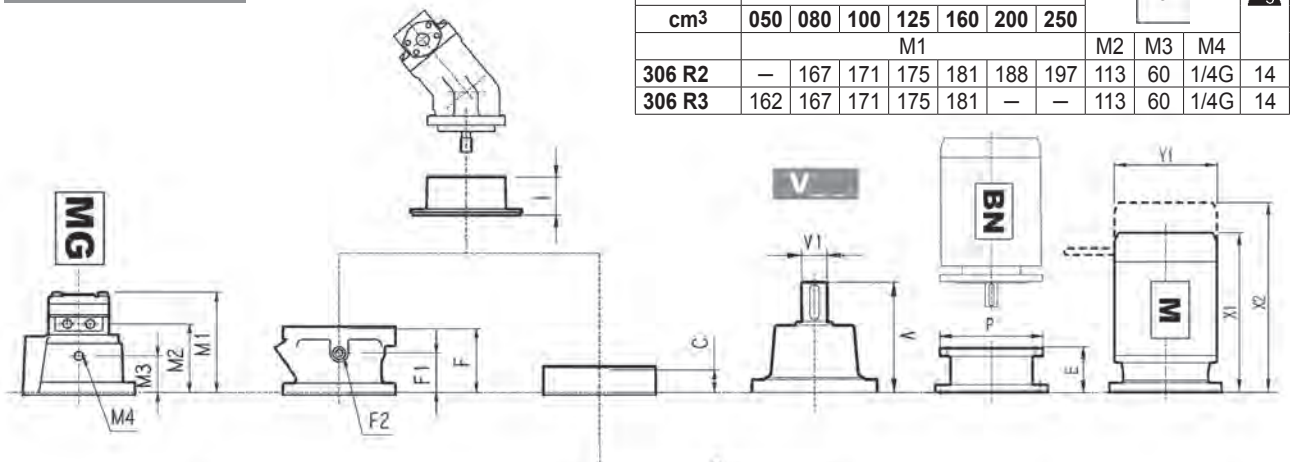

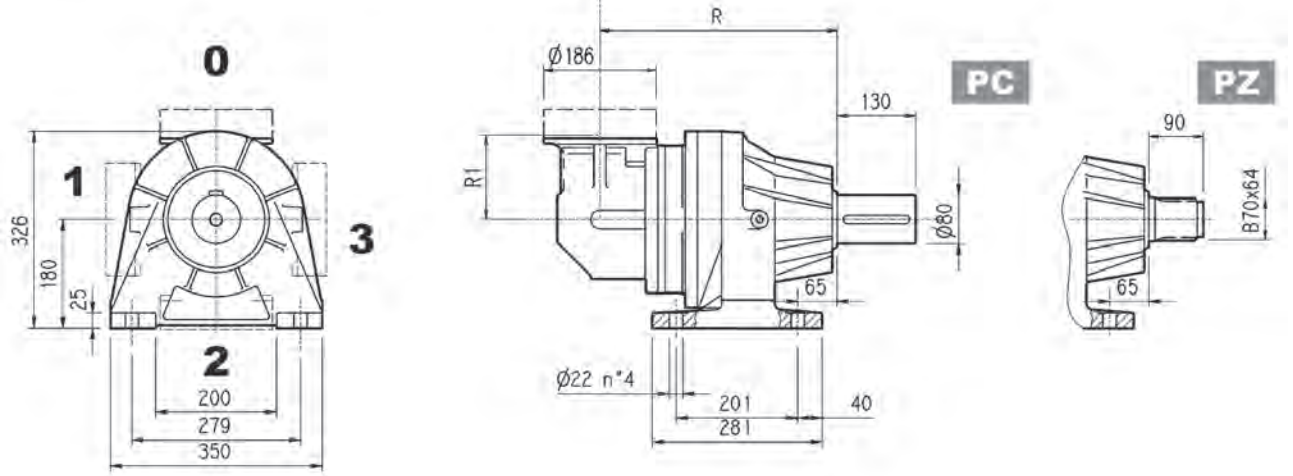

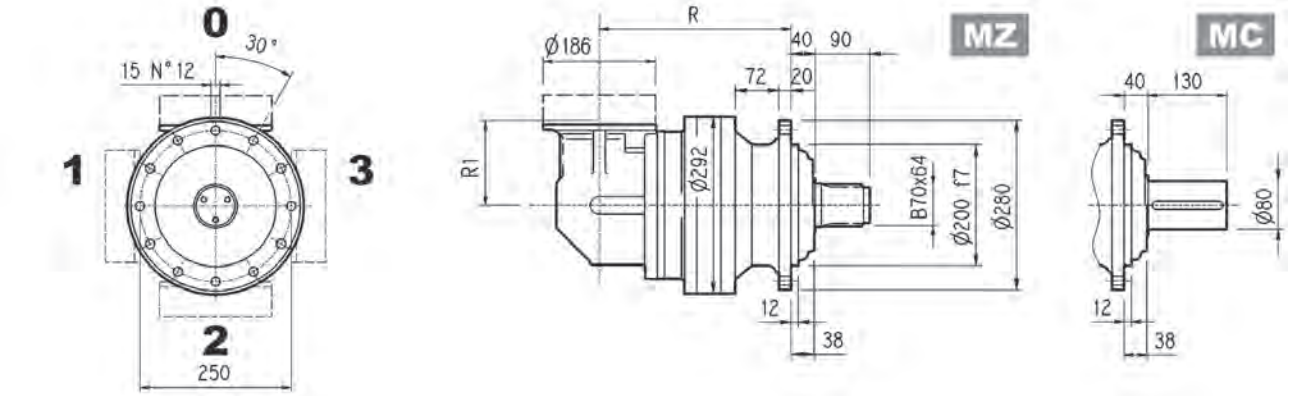

	R				R1	Kg			
	MC - MZ	PC - PZ	HC - HZ	FP - FZ - FDK		MC - MZ	PC - PZ	HC - HZ	FP - FZ - FDK
306 R2	297	372	332	297	140	89	105	94	89
306 R3	317	392	352	317	140	85	100	90	85
306 R4	370	445	405	370	122	79	95	84	79

	V	V1	Kg	V	V1	Kg	C	Input	I	F	F1	F2	Type	Input	Kg
306 R2	137.5	24	6	158	38	7	37	A		105	65	1/4 G	4	A	10
306 R3	137.5	24	6	158	38	7	37	A		105	65	1/4 G	4	A	10
306 R4	137.5	24	6	158	38	7	37	A	457	105	65	1/4 G	4	A	10

306 R

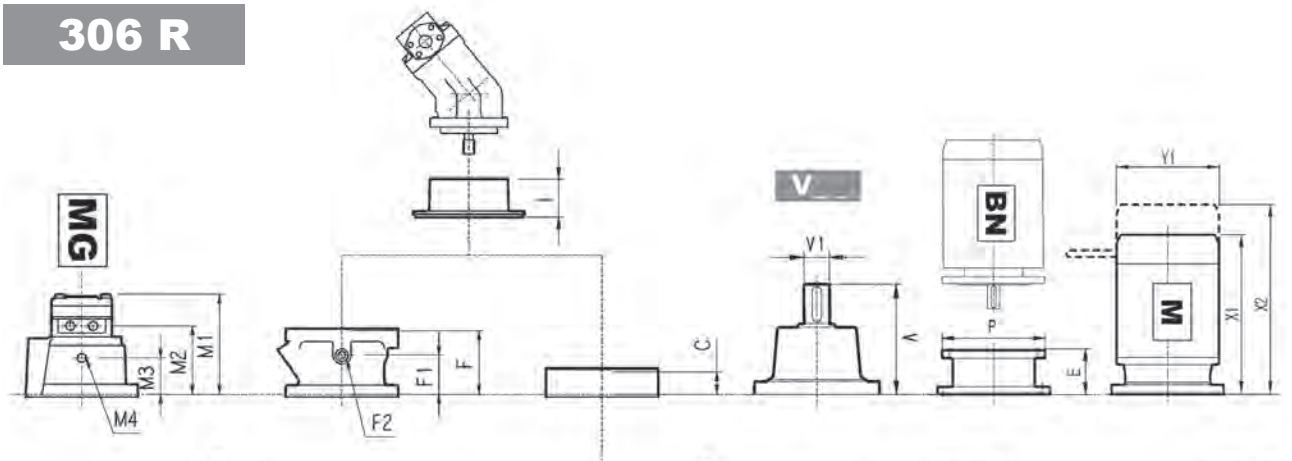

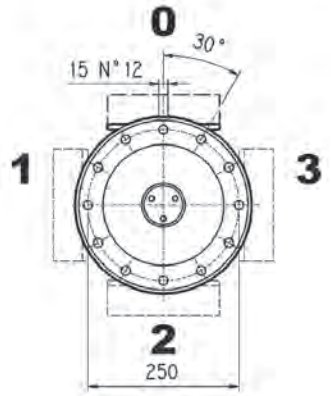

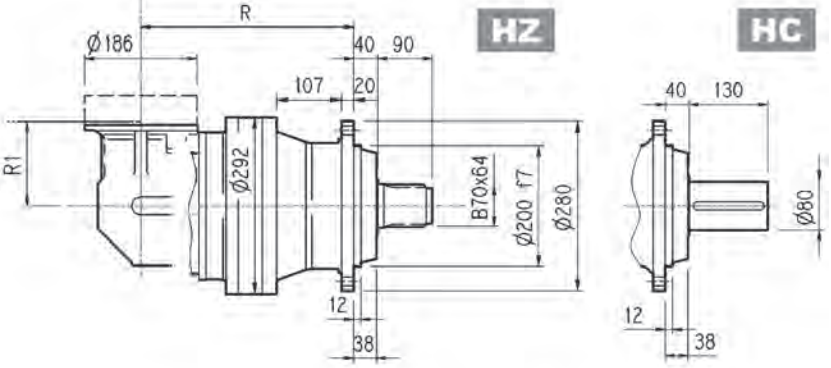

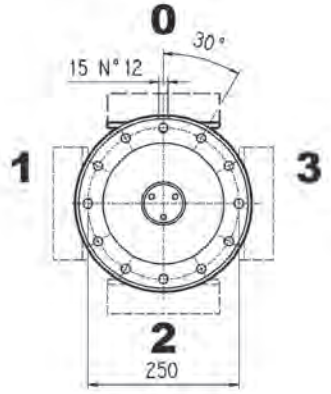

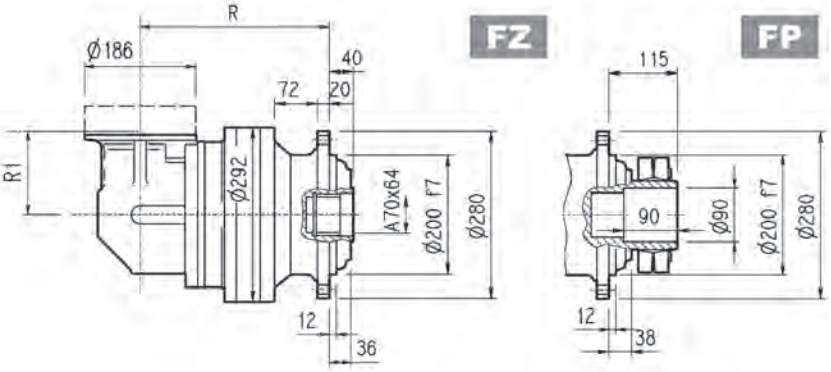

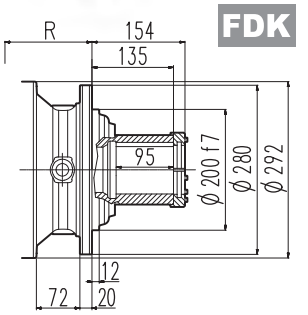

FP | M_{2max} = 12000 Nm

	P71		P80		P90		P100		P112		P132		P160	
	E	P	E	P	E	P	E	P	E	P	E	P	E	P
306 R2	65	160	84	200	84	200	94	250	94	250	114	300	144	350
306 R3	65	160	84	200	84	200	94	250	94	250	114	300	144	350
306 R4	65	160	84	200	84	200	94	250	94	250	114	300	144	350

	S1 + M1			S2 + M2S			S3 + M3S			S3 + M3L			S4 + M4		
	X1	X2	Y1	X1	X2	Y1	X1	X2	Y1	X1	X2	Y1	X1	X2	Y1
306 R2	—	—	—	328	400	156	373	469	195	405	497	195	508	619	258
306 R3	253	314	138	328	400	156	373	469	195	405	497	195	508	619	258
306 R4	253	314	138	328	400	156	373	469	195	405	497	195	508	619	258

3/V 06 L3

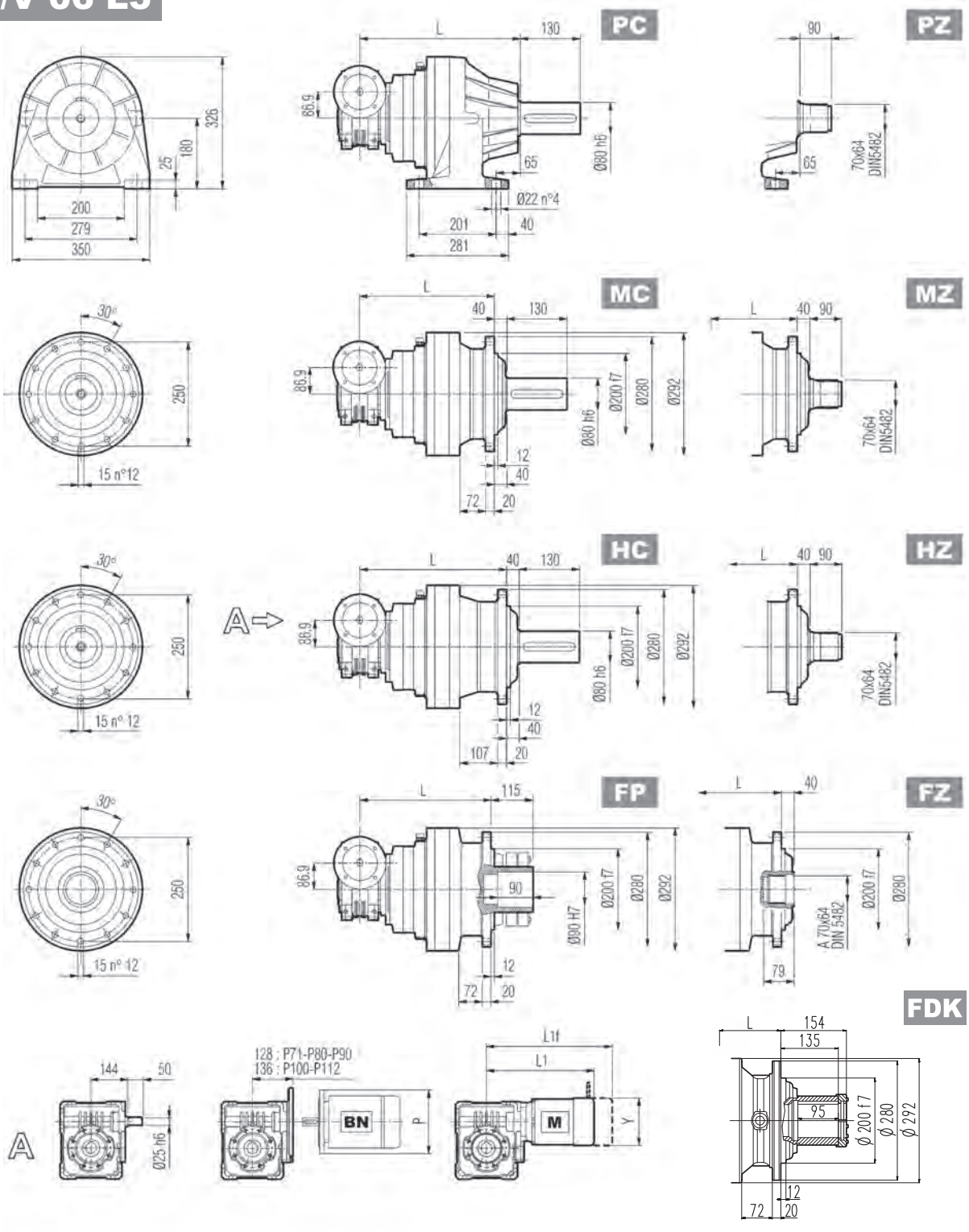

FP M_{2max} = 12000 Nm

	L				Kg				P71	P80	P90	P100	P112
	MC - MZ	PC - PZ	HC - HZ	FP - FZ - FDK	MC - MZ	PC - PZ	HC - HZ	FP - FZ - FDK	P	P	P	P	P
3/V 06 L3	370	445	405	370	80	111	95	80	160	200	200	250	250

	S1 + M1			S2 + M2S			S3 + M3S			S3 + M3L		
	L1	L1f	Y	L1	L1f	Y	L1	L1f	Y	L1	L1f	Y
3/V 06 L3	324	385	138	349	425	156	392	477	193	424	515	193

3/A 06 L2

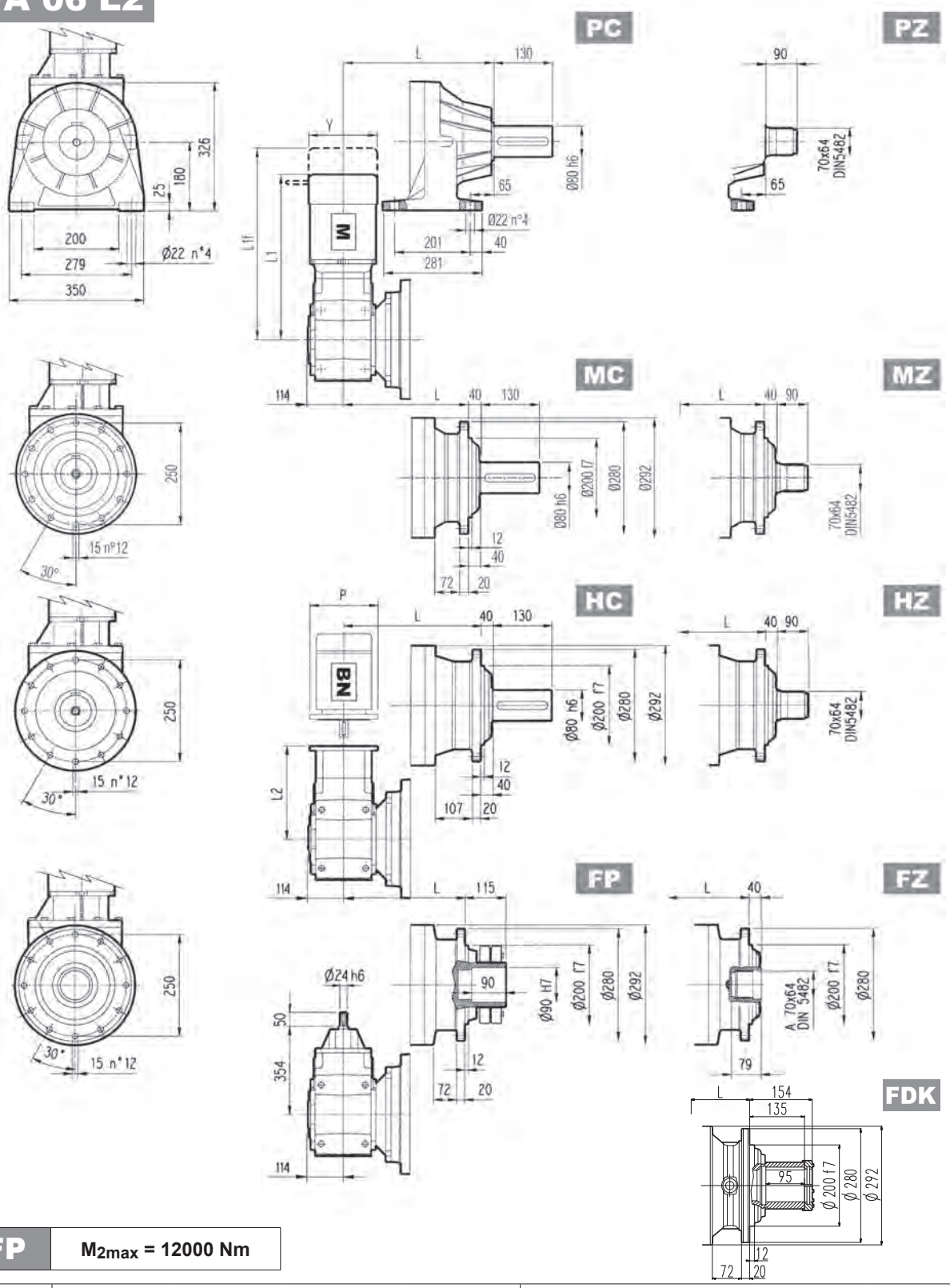

FP M_{2max} = 12000 Nm

	L				Kg			
	MC - MZ	PC - PZ	HC - HZ	FP - FZ - FDK	MC - MZ	PC - PZ	HC - HZ	FP - FZ - FDK
3/A 06 L2	340	415	375	340	140	170	150	140

	P63		P71		P80		P90		P100		P112		P132		P160		P180	
	L2	P	L2	P	L2	P	L2	P	L2	P	L2	P	L2	P	L2	P	L2	P
3/A 06 L2	314.5	140	314.5	160	334	200	334	200	344	250	344	250	380.5	300	431	350	431	350

	S1 + M1			S2 + M2S			S3 + M3SA			S3 + M3LA			S4 + M4		
	L1	L1f	Y	L1	L1f	Y	L1	L1f	Y	L1	L1f	Y	L1	L1f	Y
3/A 06 L2	445	508	138	568	517	156	541	637	195	572	665	195	678	789	258

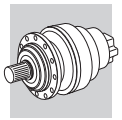

306 L | 306 R | 3/V 06 L3 | 3/A 06 L2

MC HC

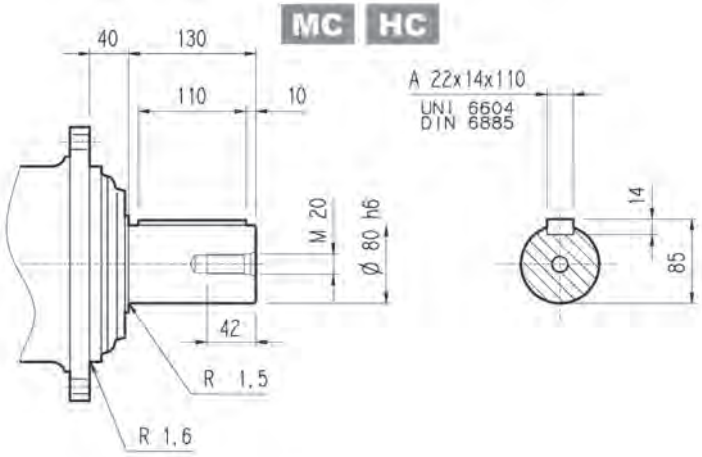

PC

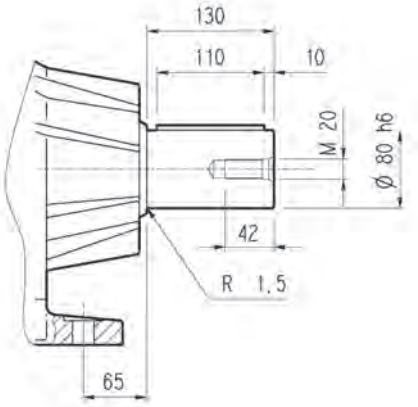

MZ HZ

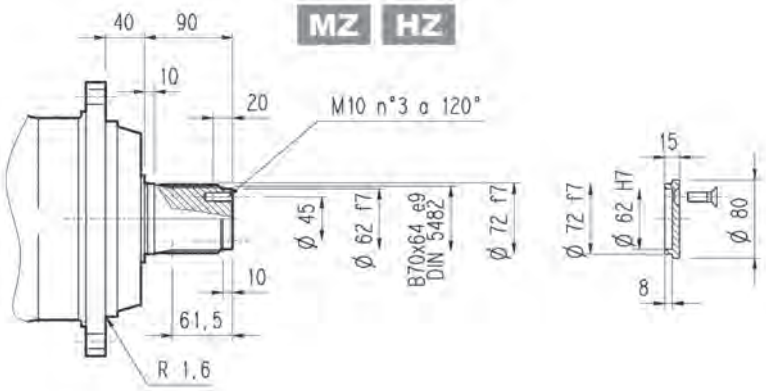

FZ

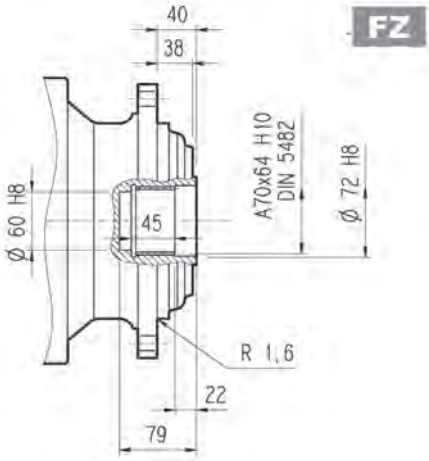

FP

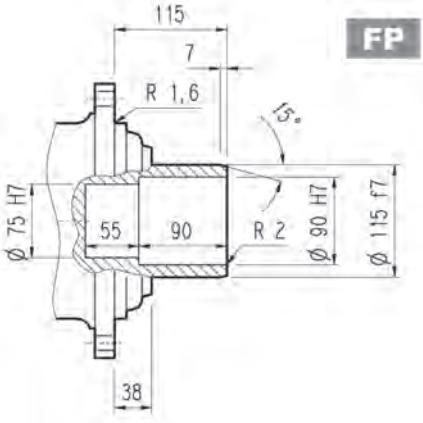

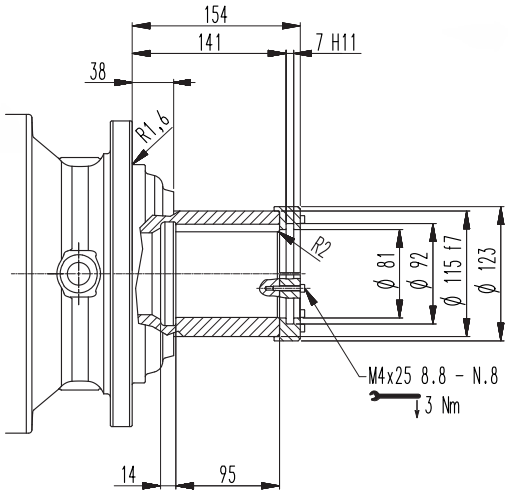

FDK

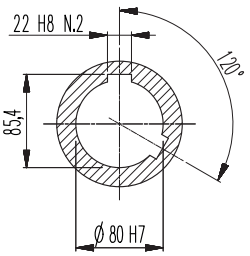

FP	M_{2max} = 12000 Nm

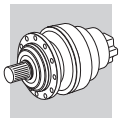

306 L | 306 R | 3/V 06 L3 | 3/A 06 L2

Flange

W0A

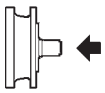

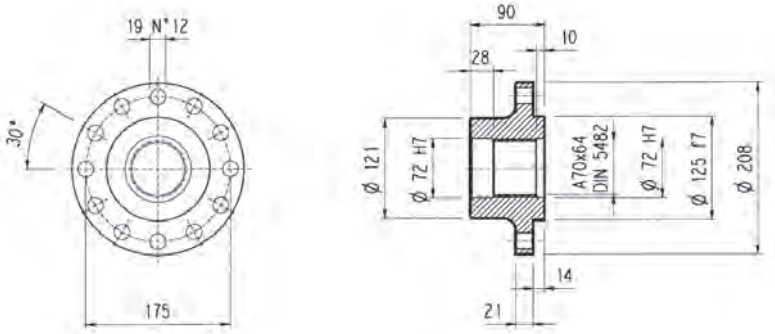

Material: Steel C40

Pinions

P...

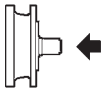

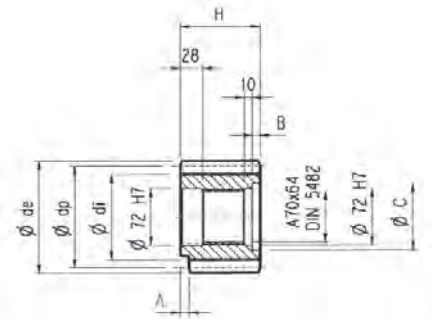

α = 20°

	m	z	x	dp	di	de	H	A	B	C	Material
PFF1	8	15	—	120	100	134	90	—	—	—	Steel 39NiCrMo3 hardened and tempered
PFF2	8	15	0.500	120	108	141	90	—	—	—	
PHB	10	11	0.500	110	95	136	90	10	—	—	
PHC1	10	12	0.450	120	104	145	90	—	—	—	
PHC2	10	12	0.320	120	100	144.2	90	—	—	—	
PHC3	10	12	0.350	120	101	144	90	—	—	—	
PHD1	10	13	0.950	130	124	165	90	—	—	—	
PHD2	10	13	0.500	130	115	159	90	—	—	—	
PHE1	10	14	—	140	115	160	90	—	—	—	
PHE2	10	14	0.500	140	125	166	90	—	—	—	Steel 18NiCrMo5 case hardened
PHF	10	15	—	150	127	167	90	24	—	—	Steel 39NiCrMo3 hardened and tempered
PHH	10	17	0.480	170	154	197.5	90	10	—	—	
PHM	10	20	—	200	175	220	90	10	—	—	Steel 18NiCrMo5 case hardened

Sleeve coupling

M0A

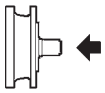

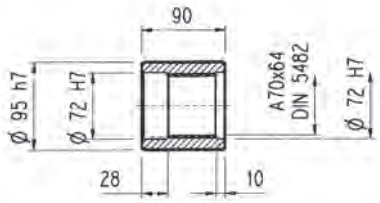

Material: Steel 16CrNi4

Splined bars

B0A

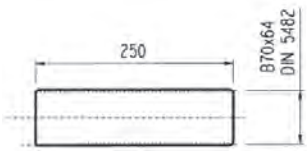

Material: Case hardening steel 18NiCrMo5 UNI 5331
must be case hardened 50-55 HRC

Shrink disc

G0A

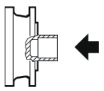

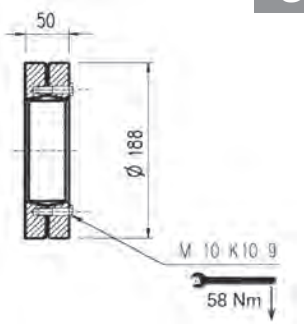

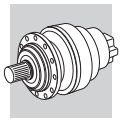

306 L 306 R

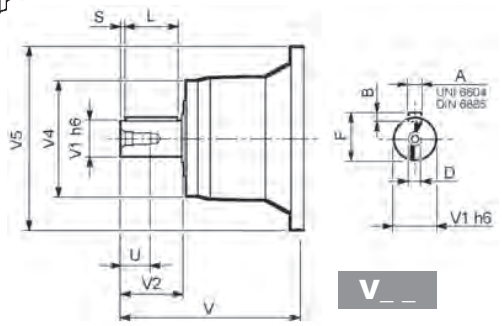

V_ _

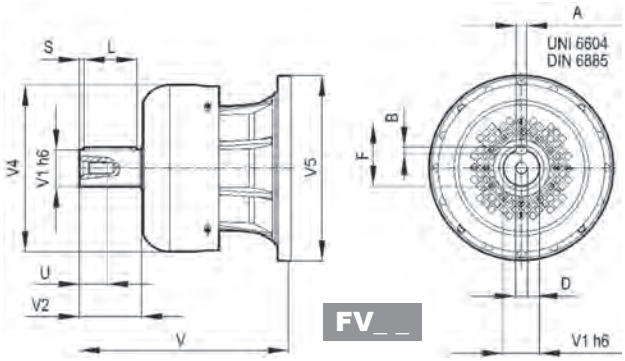

FV_ _

		V	V1	V2	V4	V5	A	B	F	L	S	D	U
306 L1	**V06B**	307	60	105	155	292	18	11	64	90	7.5	M16	36
	FV06B	357	60	105	309	292	18	11	64	90	7.5	M16	36
306 L2	**V05B**	239	48	82	155	245	14	9	51.5	70	6	M16	36
	FV05B	276	48	82	219.5	244	14	9	51.5	70	6	M16	36
306 L3	**V01A**	137.5	24	36	120	186	8	7	27	30	3	M8	19
	V01B	158	38	58	120	186	10	8	41	50	4	M12	28
306 L4	**V01A**	137.5	24	36	120	186	8	7	27	30	3	M8	19
	V01B	158	38	58	120	186	10	8	41	50	4	M12	28
306 R2-R3-R4	**V01A**	137.5	24	36	120	186	8	7	27	30	3	M8	19
	V01B	158	38	58	120	186	10	8	41	50	4	M12	28

306 L 306 R

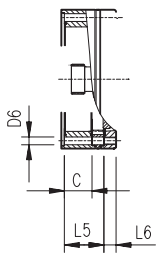

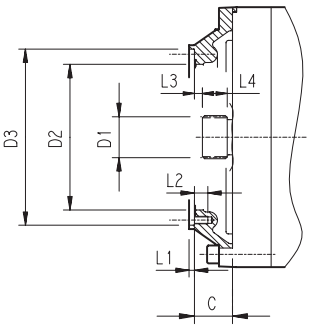

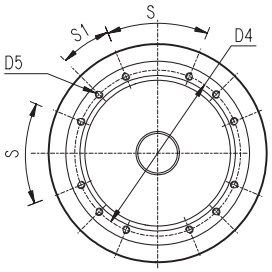

		C	D1	D2	D3	D4	D5	D6	L1	L2	L3	L4	L5	L6	S	S1	Input
306 L1	**V9AB**	45	58x53 DIN5482	195	236 H7	222	M10 n°12	—	4	18	11	22	—	—	45°	22.5°	B
306 L2	**V9AA**	37	40x36 DIN5482	140	178 H7	165	M10 n°8	—	4	18	9	18	—	—	45°	45°	A
306 L3	**V9AA**	37	40x36 DIN5482	140	178 H7	165	M10 n°8	11	4	—	9	18	53	18	45°	45°	A
306 L4	**V9AA**	37	40x36 DIN5482	140	178 H7	165	M10 n°8	11	4	—	9	18	106	18	45°	45°	A
306 R2-R3-R4	**V9AA**	37	40x36 DIN5482	140	178 H7	165	M10 n°8	11	4	—	9	18	37	18	45°	45°	A

3/V 06 L3

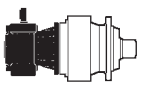

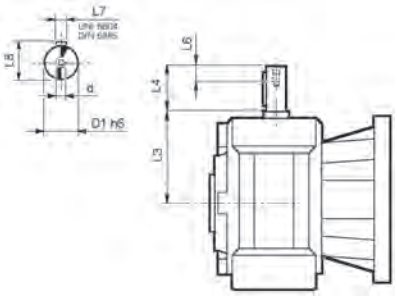

	D1 h6	L3	L4	L6	L7	L8	d
3/V 06 L3_HS	25	144	50	19	8	28	M8

3/A 06 L2

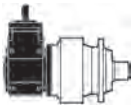

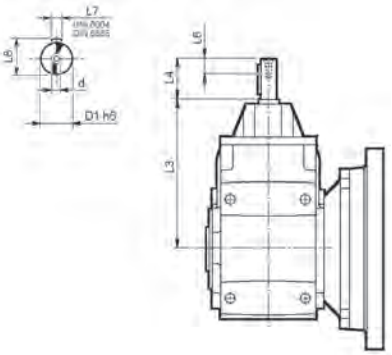

	D1 h6	L3	L4	L6	L7	L8	d
3/A 06 L2_HS	24	354	50	19	8	27	M8

Bonfiglioli Riduttori

Permissible radial and axial loads on output shaft with $Fh_2 : n_2 \cdot h = 100000$

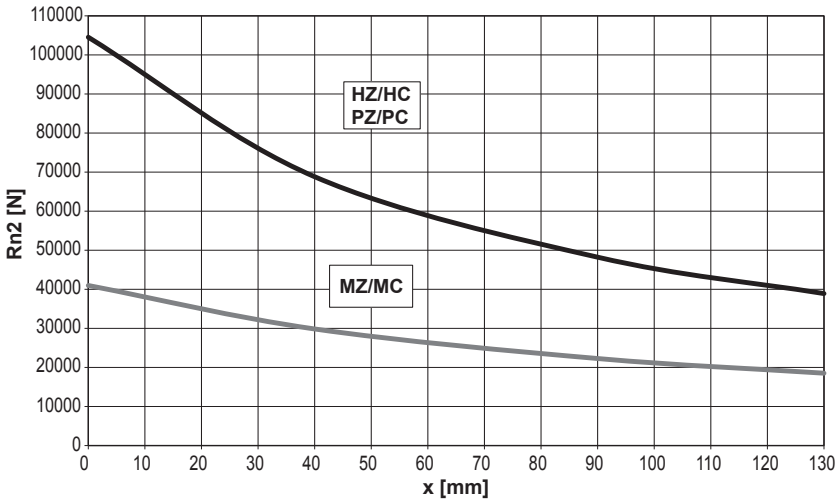

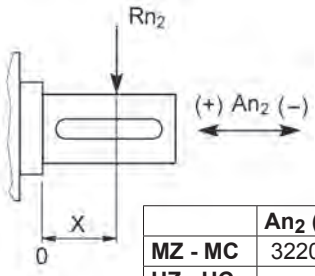

	An2 (+)	An2 (-)
MZ - MC	32200	20240
HZ - HC PZ - PC	60000	30000

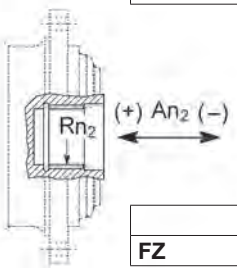

	Rn2	An2 (+/-)
FZ	16246	16246

	$Fh_2 = n_2 \cdot h$	10000	25000	50000	100000	500000	1000000
Load corrective factor fh_2 on shafts	FZ	**2.15**	**1.59**	**1.26**	**1.00**	**0.58**	**0.46**
	MZ - MC	**2.15**	**1.59**	**1.26**	**1.00**	**0.58**	**0.46**
	HZ - HC - PZ - PC	**1.34**	**1.34**	**1.23**	**1.00**	**0.62**	**0.50**

Permissible radial loads on input shaft with $Fh_1 : n_1 \cdot h = 250000$

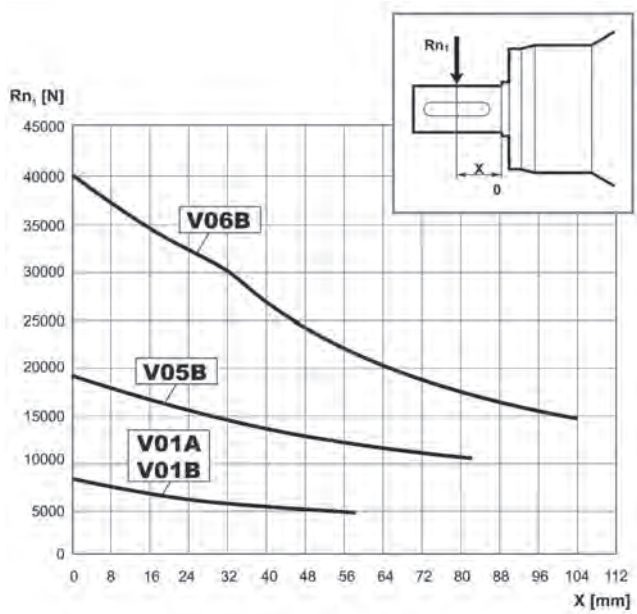

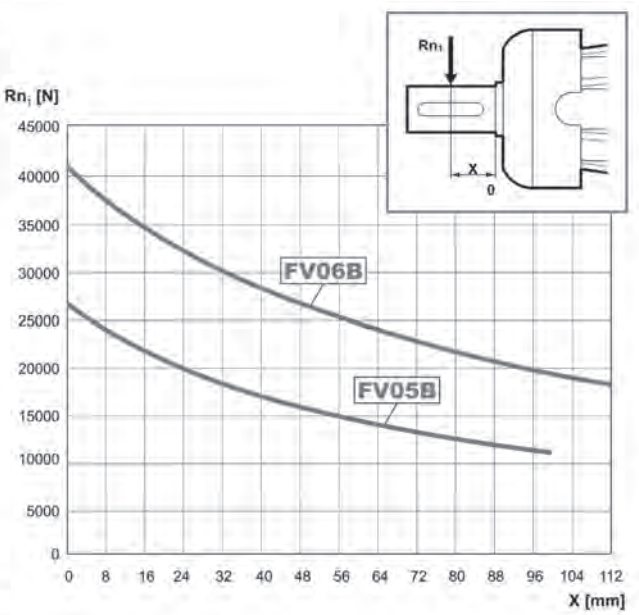

Load corrective factor fh_1 on shafts	$Fh_1 = n_1 \cdot h$	250000	500000	1000000	2000000	5000000	10000000
	fh_1	**1**	**0.79**	**0.63**	**0.50**	**0.37**	**0.29**

306 VK

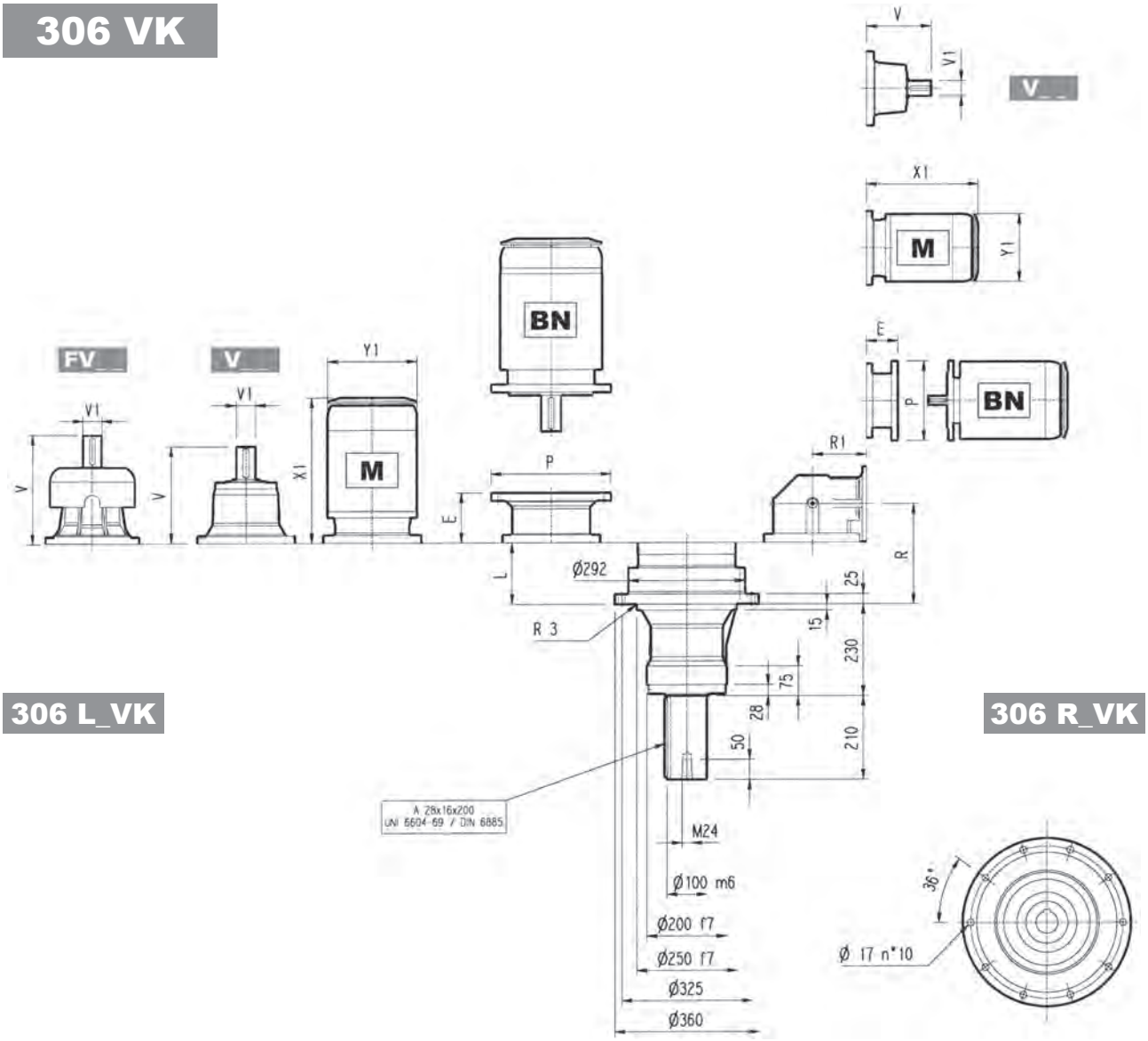

306 L_VK

306 R_VK

	L	Kg	V	V1	Kg	V	V1	Kg	V	V1	Kg	V	V1	Kg	P71		P80		P90		P100		P112		P132		P160		P180		P200		P225		P250	
															E	P	E	P	E	P	E	P	E	P	E	P	E	P	E	P	E	P	E	P	E	P
306 L1	75	110	307	60	23	—	—	—	357	60	28	—	—	—	—	—	—	—	—	—	—	—	—	—	—	—	144	350	153	350	183	400	212	450	193	550
306 L2	140	120	239	48	15	—	—	—	276	48	17	—	—	—	—	—	—	—	—	—	—	—	—	—	114	300	144	350	144	350	174	400	—	—	—	—
306 L3	193	125	137.5	24	6	158	38	7	—	—	—	—	—	—	65	160	84	200	84	200	94	250	94	250	114	300	144	350	—	—	—	—	—	—	—	—
306 L4	246	130	137.5	24	6	158	38	7	—	—	—	—	—	—	65	160	84	200	84	200	94	250	94	250	114	300	144	350	—	—	—	—	—	—	—	—

	S1 + M1			S2 + M2S			S3 + M3S			S3 + M3L			S4 + M4			S5 + M5S			S5 + M5L		
	X1	X2	Y1	X1	X2	Y1	X1	X2	Y1	X1	X2	Y1	X1	X2	Y1	X1	X2	Y1	X1	X2	Y1
306 L1	—	—	—	—	—	—	—	—	—	—	—	—	—	—	—	—	—	—	—	—	—
306 L2	—	—	—	—	—	—	—	—	—	—	—	—	460	571	258	552	692	310	596	736	310
306 L3	253	314	138	280	352	156	325	421	195	357	449	195	460	571	258	—	—	—	—	—	—
306 L4	253	314	138	280	352	156	325	421	195	357	449	195	460	571	258	—	—	—	—	—	—

	R	R1	Kg	V	V1	Kg	V	V1	Kg	P71		P80		P90		P100		P112		P132		P160	
										E	P	E	P	E	P	E	P	E	P	E	P	E	P
306 R2	212	140	90	137.5	24	6	158	38	7	65	160	84	200	84	200	94	250	94	250	114	300	144	350
306 R3	232	140	92	137.5	24	6	158	38	7	65	160	84	200	84	200	94	250	94	250	114	300	144	350
306 R4	285	122	95	137.5	24	6	158	38	7	65	160	84	200	84	200	94	250	94	250	114	300	144	350

	S1 + M1			S2 + M2S			S3 + M3S			S3 + M3L			S4 + M4		
	X1	X2	Y1	X1	X2	Y1	X1	X2	Y1	X1	X2	Y1	X1	X2	Y1
306 R2	—	—	—	328	400	156	373	469	195	405	497	195	508	619	258
306 R3	253	314	138	328	400	156	373	469	195	405	497	195	508	619	258
306 R4	253	314	138	328	400	156	373	469	195	405	497	195	508	619	258

306 VK

The diagram below allows the calculation of permitted overhung load R_{x2} on the output shaft of gearbox, with radial force applying at a distance x from shaft shoulder.
The curves are relevant to value resulting from the relationship of trust load A_{n2} to radial load R_{n2}, based on n_2 = 10 min^{-1} and 10000 hrs theoretical lifetime.

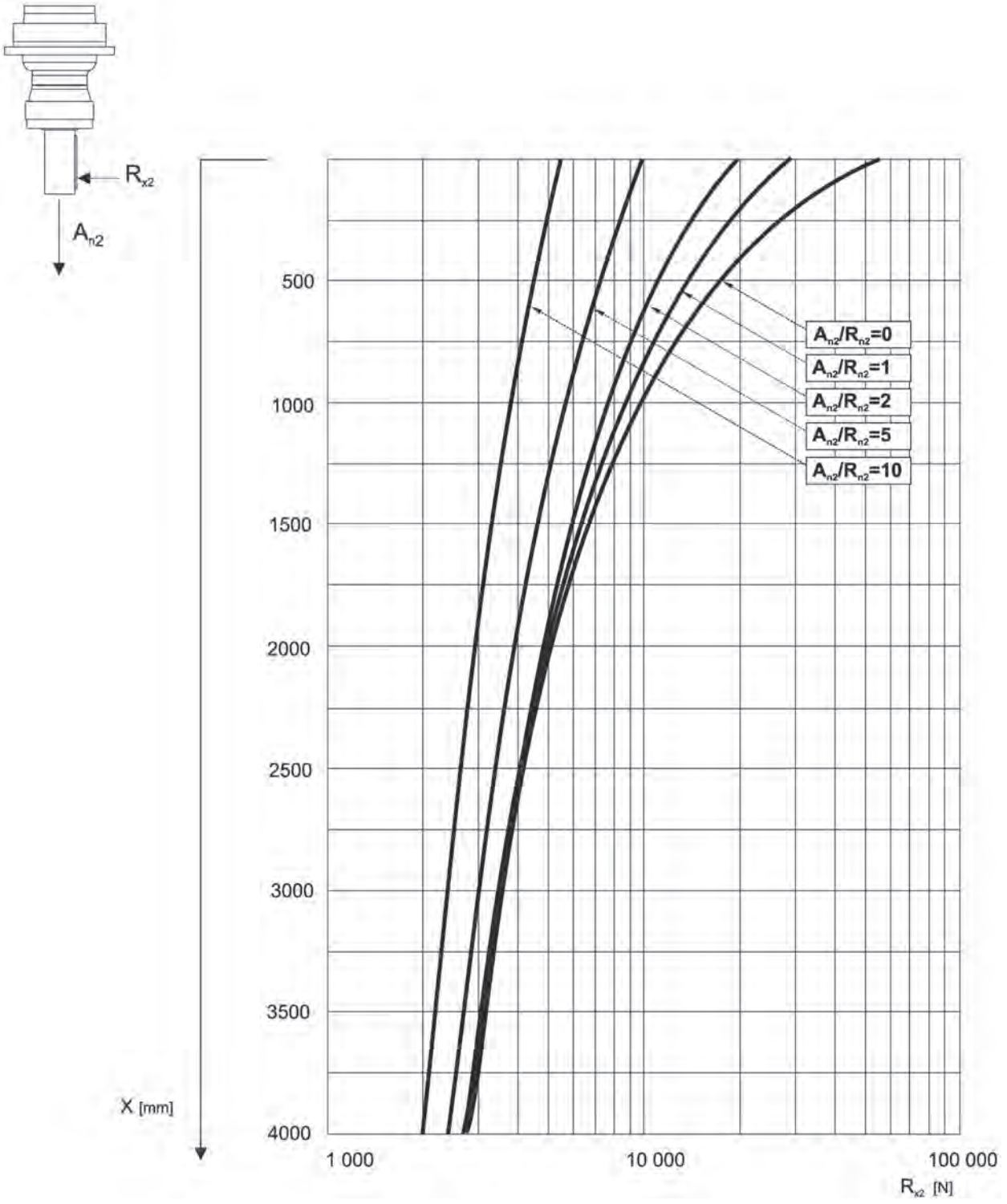

307 L

	Hydraulic motor										
	MG							467			Kg
cm³	050	080	100	125	160	200	250				
	M1							M2	M3	M4	
307 L2	–	–	–	–	203	210	219	135	77	1/4G	20

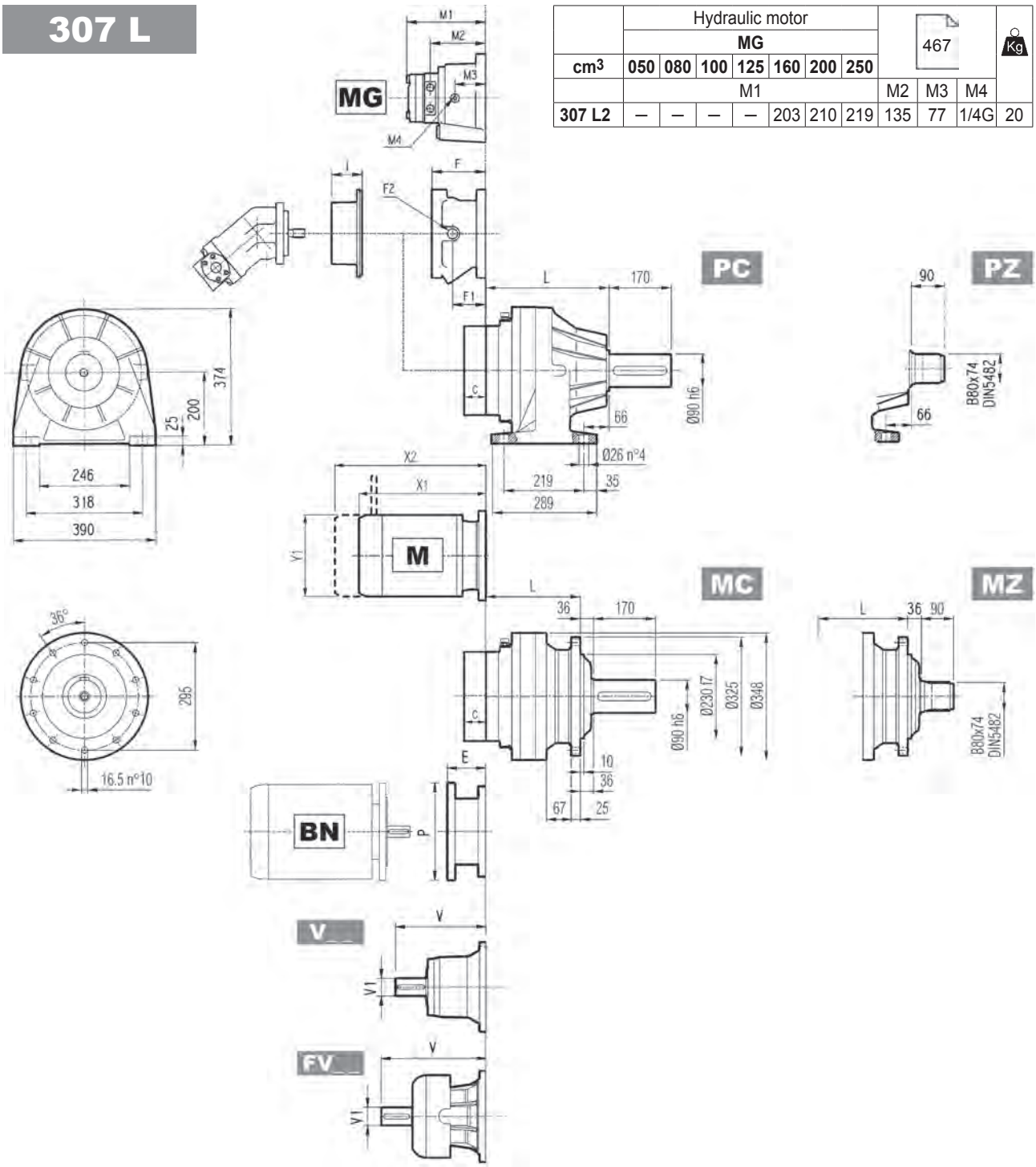

	L				Kg			
	MC - MZ	PC - PZ	HC - HZ	FP - FZ - FDK	MC - MZ	PC - PZ	HC - HZ	FP - FZ - FDK
307 L1	165	246	210	165	85	120	105	85
307 L2	254	335	299	254	97	132	117	97
307 L3	319	400	364	319	104	139	124	104
307 L4	372	453	417	372	108	143	128	108

	V	V1	Kg	V	V1	Kg	V	V1	Kg	V	V1	Kg	C	Input	I	F	F1	F2	Type	Input	Kg
307 L1	315	80	35	313	60	28	375	80	48	363	60	34	51	B		201	153	1/4 G	6	B	28
307 L2	239	48	15	—	—	—	276	48	17	—	—	—	37	A		145	95	1/4 G	5	A	16
307 L3	137.5	24	6	158	38	7	—	—	—	—	—	—	37	A	457	105	65	1/4 G	4	A	10
307 L4	137.5	24	6	158	38	7	—	—	—	—	—	—	37	A		105	65	1/4 G	4	A	10

307 L

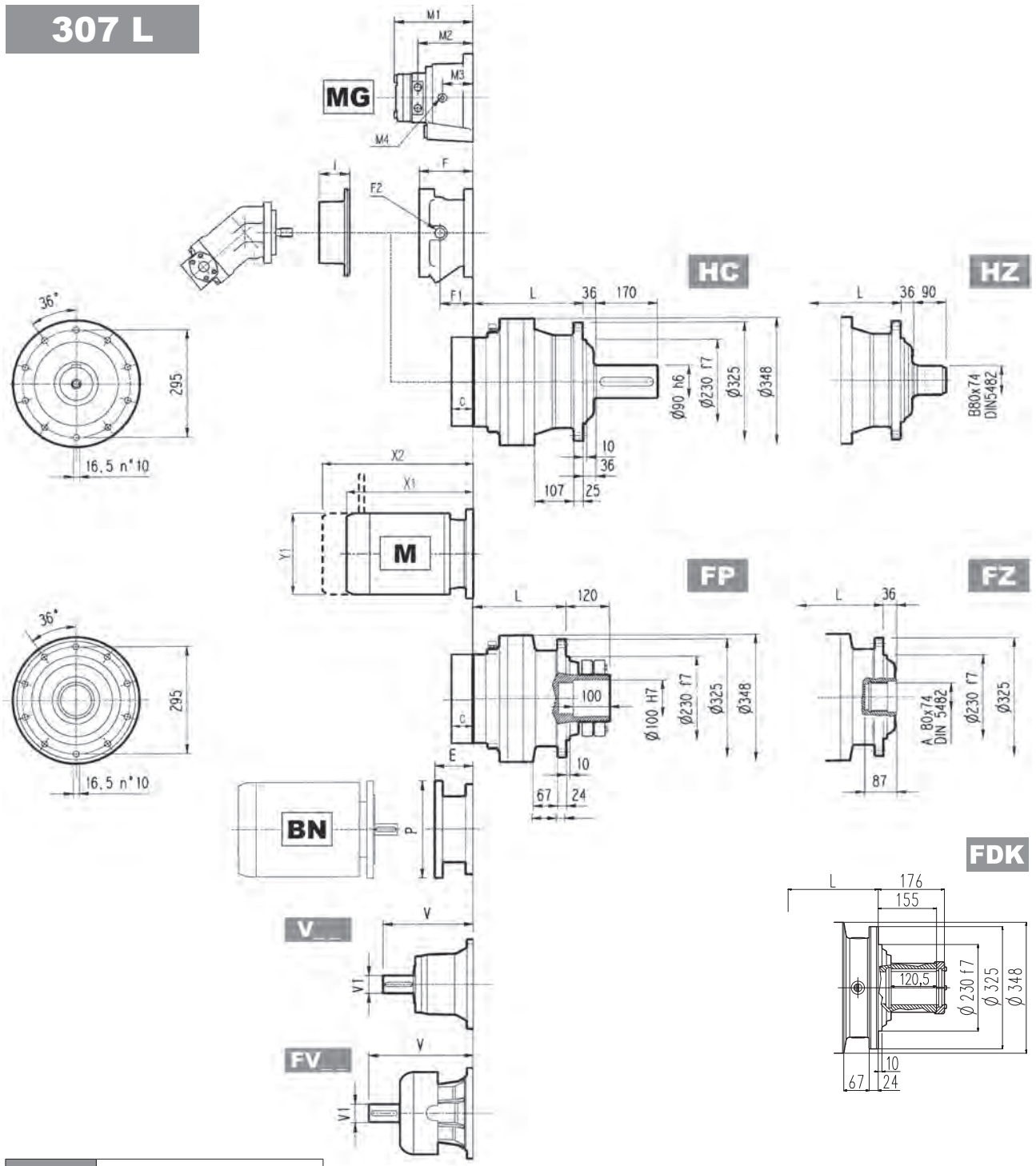

FP M_{2max} = 18200 Nm

	P71		P80		P90		P100		P112		P132		P160		P180		P200		P225		P250	
	E	P	E	P	E	P	E	P	E	P	E	P	E	P	E	P	E	P	E	P	E	P
307 L1	—	—	—	—	—	—	—	—	—	—	—	—	—	—	195	350	186	400	216	450	215	550
307 L2	—	—	—	—	—	—	—	—	—	—	114	300	144	350	144	350	174	400	—	—	—	—
307 L3	65	160	84	200	84	200	94	250	94	250	114	300	144	350	—	—	—	—	—	—	—	—
307 L4	65	160	84	200	84	200	94	250	94	250	114	300	144	350	—	—	—	—	—	—	—	—

	S1 + M1			S2 + M2S			S3 + M3S			S3 + M3L			S4 + M4			S5 + M5S			S5 + M5L		
	X1	X2	Y1	X1	X2	Y1	X1	X2	Y1	X1	X2	Y1	X1	X2	Y1	X1	X2	Y1	X1	X2	Y1
307 L1	—	—	—	—	—	—	—	—	—	—	—	—	—	—	—	—	—	—	—	—	—
307 L2	—	—	—	—	—	—	—	—	—	—	—	—	460	571	258	552	692	310	596	736	310
307 L3	—	—	—	280	352	156	325	421	195	357	449	195	460	571	258	—	—	—	—	—	—
307 L4	253	314	138	280	352	156	325	421	195	357	449	195	460	571	258	—	—	—	—	—	—

307 R

	Hydraulic motor										
	MG							467			Kg
cm³	050	080	100	125	160	200	250				
	M1							M2	M3	M4	
307 R2	–	–	171	175	181	188	197	113	60	1/4G	14
307 R3	–	167	171	175	181	188	197	113	60	1/4G	14

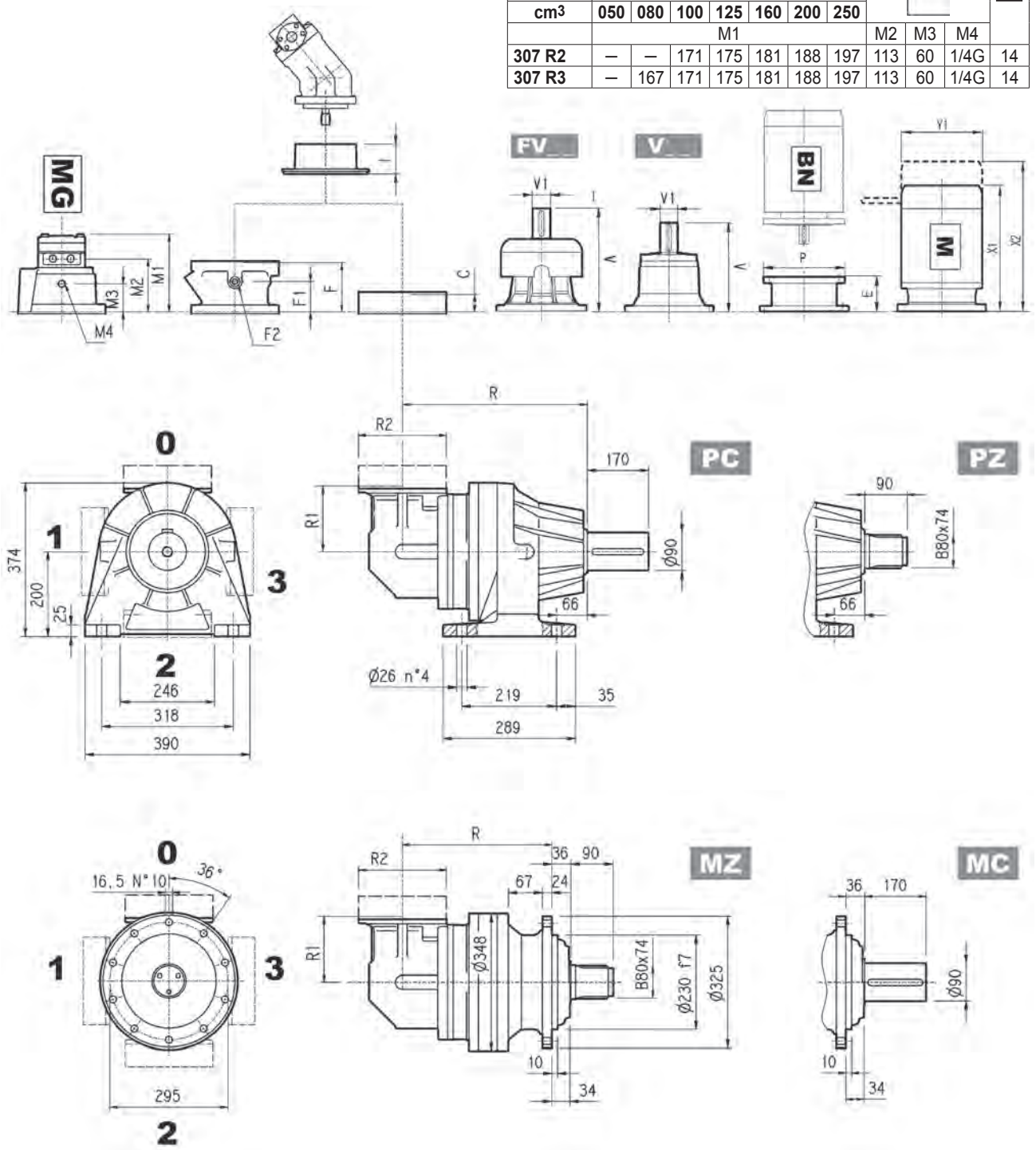

	R				R1	R2	Kg			
	MC - MZ	PC - PZ	HC - HZ	FP - FZ - FDK			MC - MZ	PC - PZ	HC - HZ	FP - FZ - FDK
307 R2	284	365	329	284	225	245	135	170	155	135
307 R3	346	427	391	346	140	186	117	152	137	117
307 R4	411	492	456	411	122	186	118	153	138	118

	V	V1	Kg	V	V1	Kg	V	V1	Kg	V	V1	Kg	C	Input	I	F	F1	F2	Type	Input	Kg
307 R2	239	48	15	—	—	—	276	48	17	—	—	—	37	A		145	95	1/4 G	5	A	16
307 R3	137.5	24	6	158	38	7	—	—	—	—	—	—	37	A		105	65	1/4 G	4	A	10
307 R4	137.5	24	6	158	38	7	—	—	—	—	—	—	37	A	457	105	65	1/4 G	4	A	10

307 R

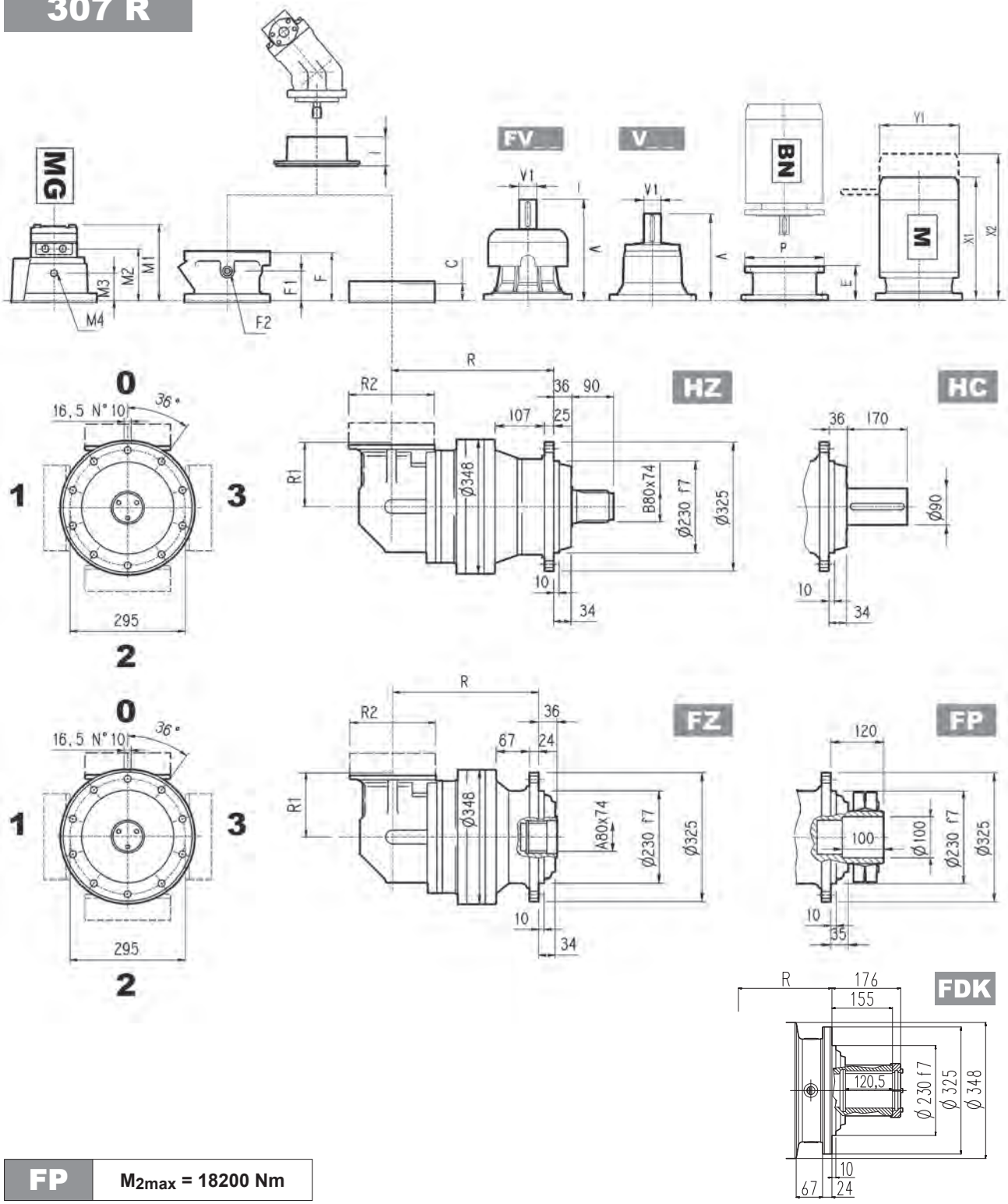

FP M_{2max} = 18200 Nm

	P71		P80		P90		P100		P112		P132		P160		P180		P200	
	E	P	E	P	E	P	E	P	E	P	E	P	E	P	E	P	E	P
307 R2	—	—	—	—	—	—	—	—	—	—	114	300	144	350	144	350	174	400
307 R3	65	160	84	200	84	200	94	250	94	250	114	300	144	350	—	—	—	—
307 R4	65	160	84	200	84	200	94	250	94	250	114	300	144	350	—	—	—	—

	S1 + M1			S2 + M2S			S3 + M3S			S3 + M3L			S4 + M4			S5 + M5S			S5 + M5L		
	X1	X2	Y1	X1	X2	Y1	X1	X2	Y1	X1	X2	Y1	X1	X2	Y1	X1	X2	Y1	X1	X2	Y1
307 R2	—	—	—	—	—	—	—	—	—	—	—	—	508	619	258	552	692	310	596	736	310
307 R3	253	314	138	328	400	156	373	469	195	405	497	195	508	619	258	—	—	—	—	—	—
307 R4	253	314	138	328	400	156	373	469	195	405	497	195	508	619	258	—	—	—	—	—	—

3/V 07 L3

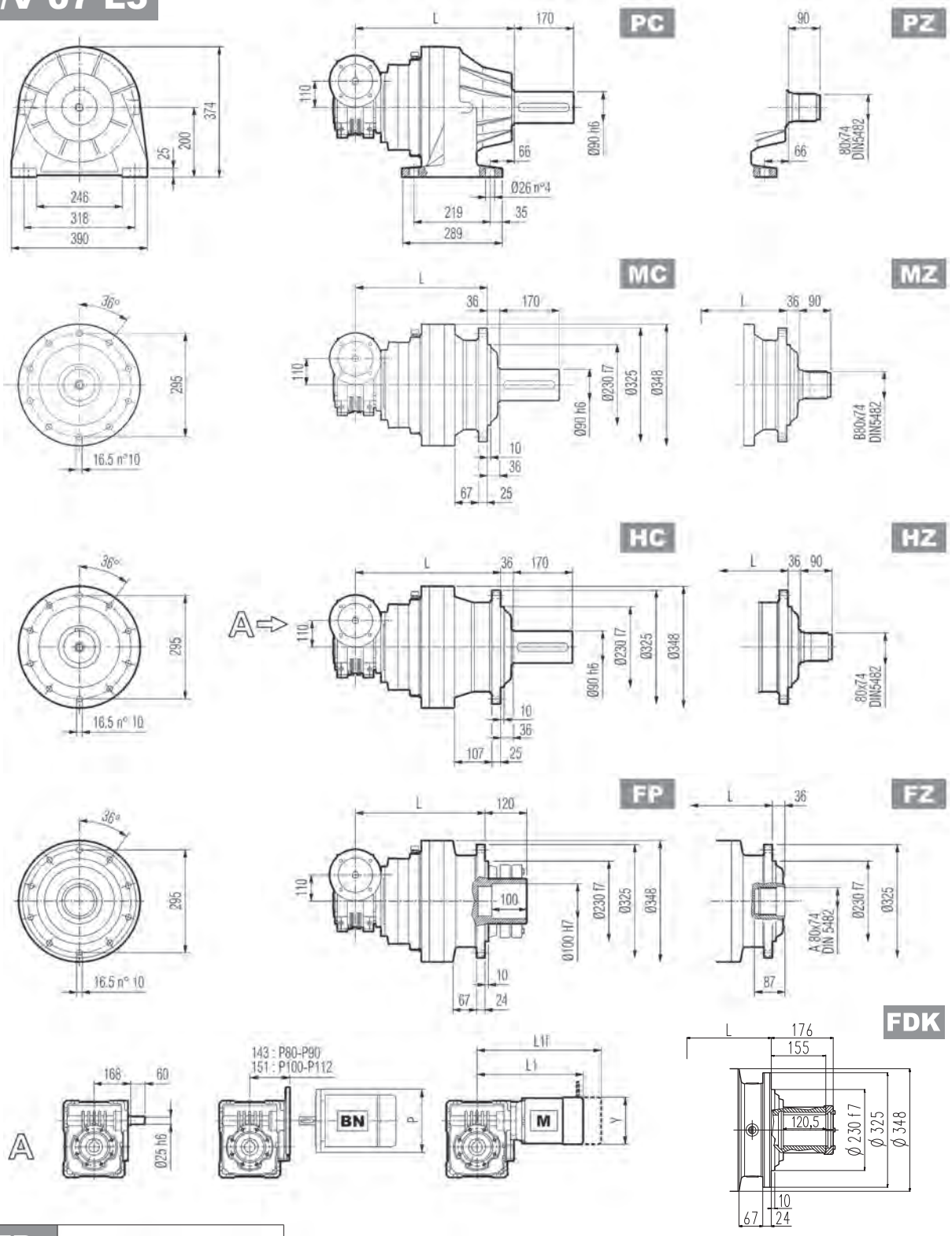

FP M_{2max} = 18200 Nm

	L				Kg				P80	P90	P100	P112
	MC - MZ	PC - PZ	HC - HZ	FP - FZ - FDK	MC - MZ	PC - PZ	HC - HZ	FP - FZ - FDK	P	P	P	P
3/V 07 L3	414	495	459	414	130	165	150	130	200	200	250	250

	S2 + M2S			S3 + M3S			S3 + M3L		
	L1	L1f	Y	L1	L1f	Y	L1	L1f	Y
3/V 07 L3	364	440	156	407	503	193	439	530	193

3/A 07 L2

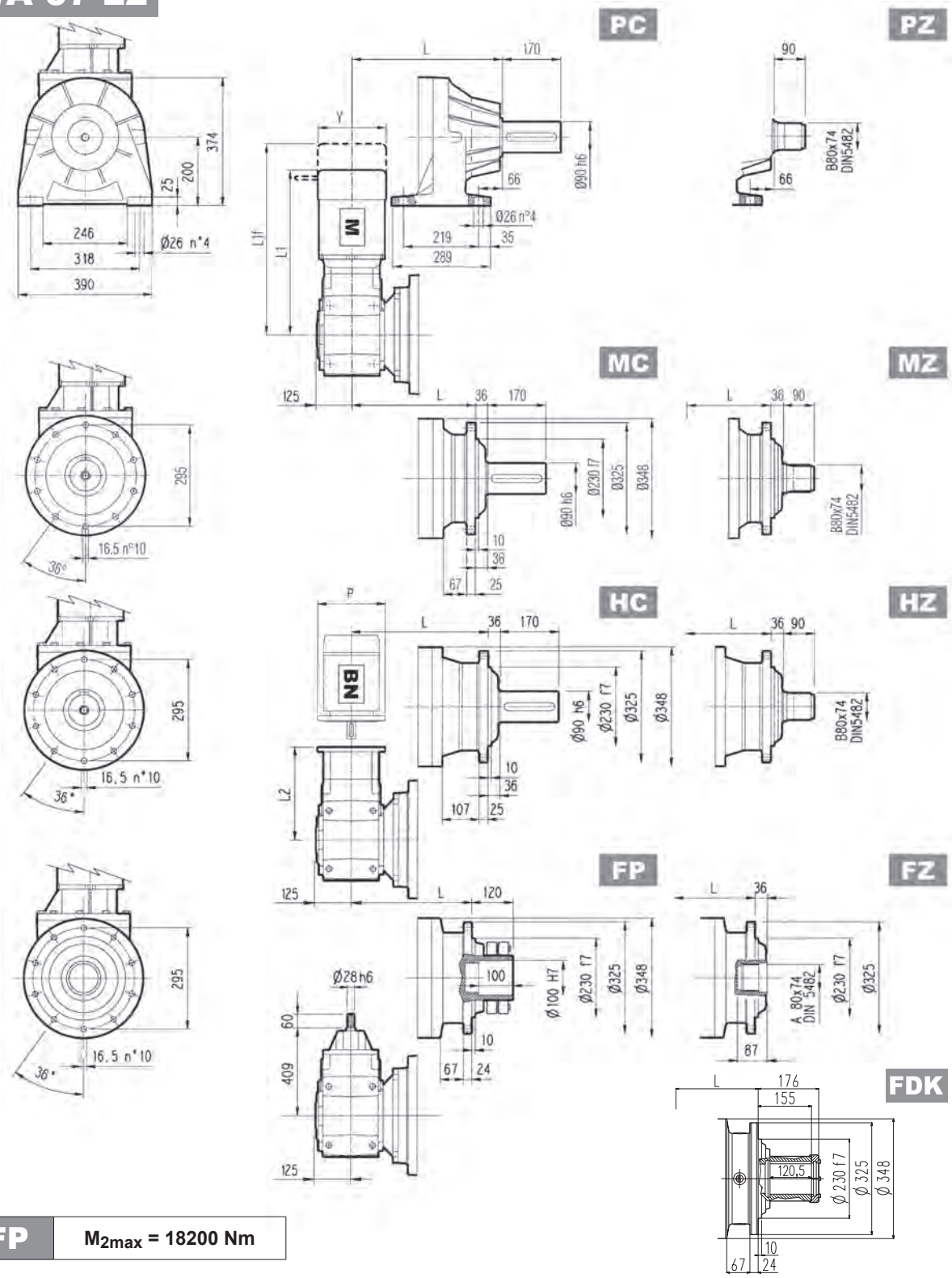

FP M_{2max} = 18200 Nm

	L				Kg			
	MC - MZ	PC - PZ	HC - HZ	FP - FZ - FDK	MC - MZ	PC - PZ	HC - HZ	FP - FZ - FDK
3/A 07 L2	336	417	381	336	200	230	210	200

	P80		P90		P100		P112	P132		P160		P180	
	L2	P	L2	P	L2	P	L2	P	L2	P	L2	P	L2	P
3/A 07 L2	371	200	371	200	381	250	381	250	416.5	300	468	350	468	350

	S2 + M2S			S3 + M3SA			S3 + M3LA			S4 + M4			S5 + M5S			S5 + M5L		
	L1	L1f	Y	L1	L1f	Y	L1	L1f	Y	L1	L1f	Y	L1	L1f	Y	L1	L1f	Y
3/A 07 L2	535	605	156	578.5	674.5	195	610.5	701.5	195	718.5	827.5	258	970	1110	—	1014	1154	—

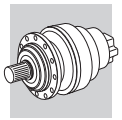

307 L | 307 R | 3/V 07 L3 | 3/A 07 L2

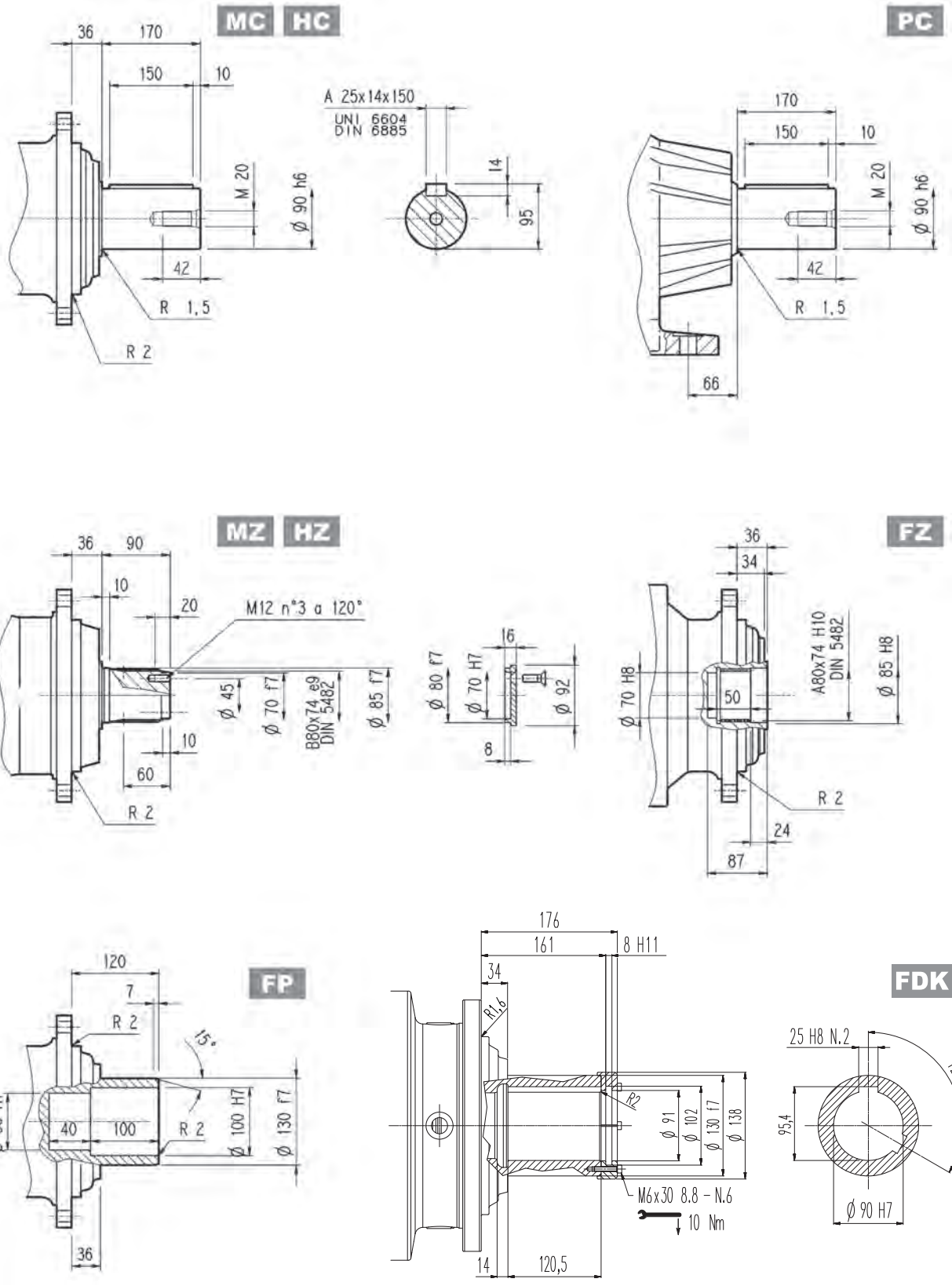

FP	M_{2max} = 18200 Nm

Flange

W0A

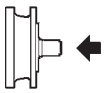

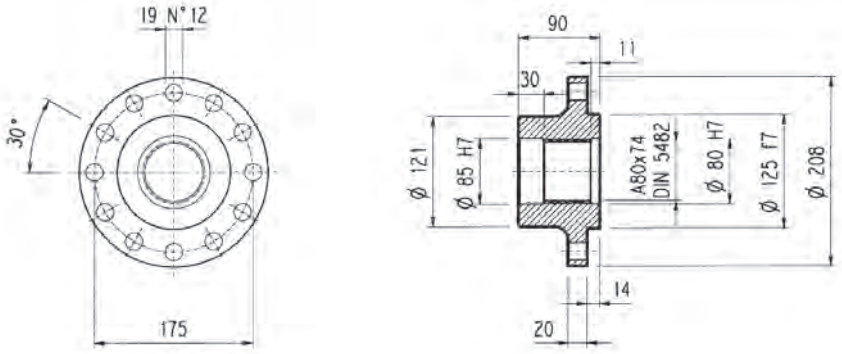

Material: Steel C40

Pinions

P...

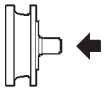

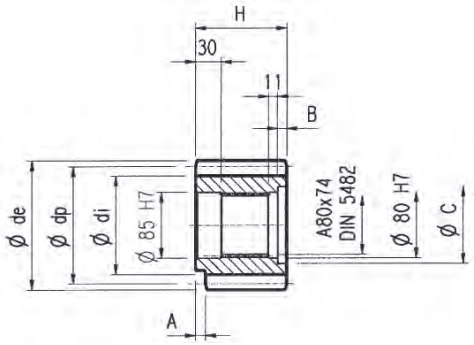

$\alpha = 20°$

	m	z	x	dp	di	de	H	A	B	C	Material
PFG	8	16	0.500	128	117	149.5	90	—	—	—	Steel 39NiCrMo3 hardened and tempered
PHC	10	12	0.450	120	104	145	90	—	—	—	
PHE	10	14	0.320	140	121	165	116	13	26	95	
PHF	10	15	0.150	150	130	171.5	107	20	17	100	
PHG	10	16	0.500	160	145	186	90	—	—	—	Steel 18NiCrMo5 case hardened
PHH1	10	17	—	170	145	189	90	—	—	—	
PHH2	10	17	0.500	170	154	198	90	—	—	—	
PLD	12	13	0.500	156	138	192	102	—	12	95	Steel 39NiCrMo3 hardened and tempered
PLE	12	14	0.500	168	150	199.2	90	—	—	—	
PLI	12	18	0.500	216	198	249.6	107	7	17	95	
PLT	12	26	—	312	282	336	90	10	—	—	Steel 18NiCrMo5 case hardened

Sleeve coupling

M0A

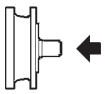

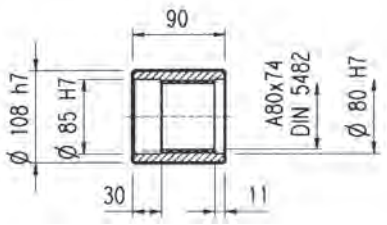

Material: Steel 16CrNi4

Splined bars

B0A

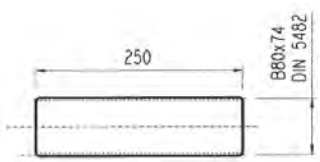

Material: Case hardening steel 18NiCrMo5 UNI 5331
must be case hardened 50-55 HRC

Shrink disc

G0A

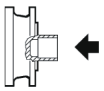

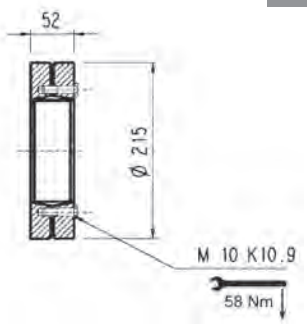

307 L 307 R

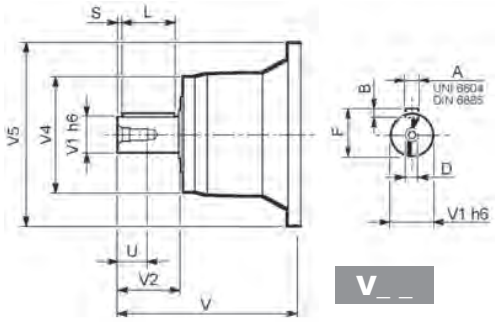

V_ _

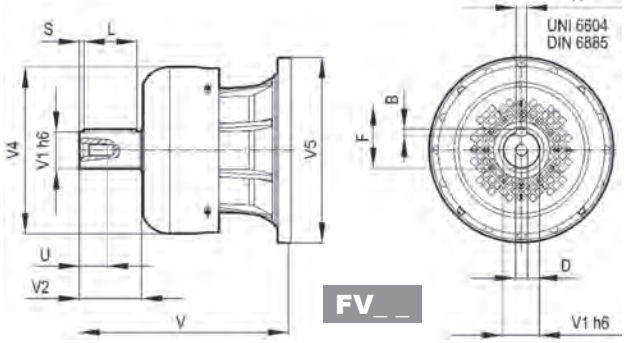

FV_ _

		V	V1	V2	V4	V5	A	B	F	L	S	D	U
307 L1	V07B	315	80	130	200	345	22	14	85	110	10	M16	36
	FV07B	375	80	130	347.5	348	22	14	85	110	10	M16	36
	V07A	313	60	105	155	345	18	11	64	90	7.5	M16	36
	FV07A	363	60	105	309	348	18	11	64	90	7.5	M16	36
307 L2	V05B	239	48	82	155	245	14	9	51.5	70	6	M16	36
	FV05B	276	48	82	219.5	244	14	9	51.5	70	6	M16	36
307 L3	V01A	137.5	24	36	120	186	8	7	27	30	3	M8	19
	V01B	158	38	58	120	186	10	8	41	50	4	M12	28
307 L4	V01A	137.5	24	36	120	186	8	7	27	30	3	M8	19
	V01B	158	38	58	120	186	10	8	41	50	4	M12	28
307 R2	V05B	239	48	82	155	245	14	9	51.5	70	6	M16	36
	FV05B	276	48	82	219.5	244	14	9	51.5	70	6	M16	36
307 R3-R4	V01A	137.5	24	36	120	186	8	7	27	30	3	M8	19
	V01B	158	38	58	120	186	10	8	41	50	4	M12	28

307 L 307 R

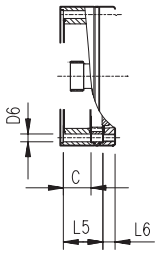

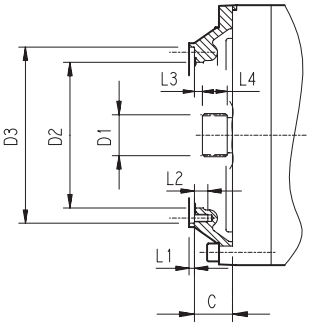

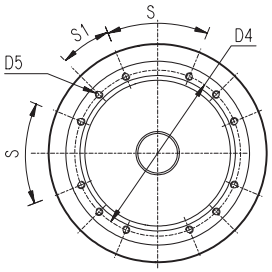

		C	D1	D2	D3	D4	D5	D6	L1	L2	L3	L4	L5	L6	S	S1	Input
307 L1	V9AB	51	58x53 DIN 5482	195	236 H7	222	M10 n°12	—	4	18	11	22	—	—	45°	22.5°	B
307 L2	V9AA	37	40x36 DIN 5482	140	178 H7	165	M10 n°8	—	4	18	9	18	—	—	45°	45°	A
307 L3	V9AA	37	40x36 DIN 5482	140	178 H7	165	M10 n°8	11	4	—	9	18	65	18	45°	45°	A
307 L4	V9AA	37	40x36 DIN 5482	140	178 H7	165	M10 n°8	11	4	—	9	18	118	18	45°	45°	A
307 R2	V9AA	37	40x36 DIN 5482	140	178 H7	165	M10 n°8	11	4	18	9	18	—	—	45°	45°	A
307 R3-R4	V9AA	37	40x36 DIN 5482	140	178 H7	165	M10 n°8	11	4	—	9	18	37	18	45°	45°	A

3/V 07 L3

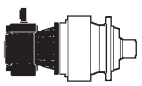

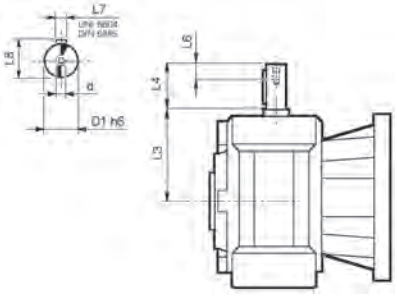

	D1 h6	L3	L4	L6	L7	L8	d
3/V 07 L3_HS	25	168	60	19	8	28	M8

3/A 07 L2

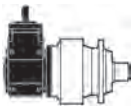

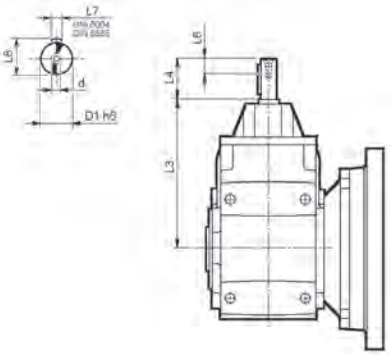

	D1 h6	L3	L4	L6	L7	L8	d
3/A 07 L2_HS	28	409	60	22	8	31	M10

Bonfiglioli Riduttori

Permissible radial and axial loads on output shaft with $Fh_2 : n_2 \cdot h = 100000$

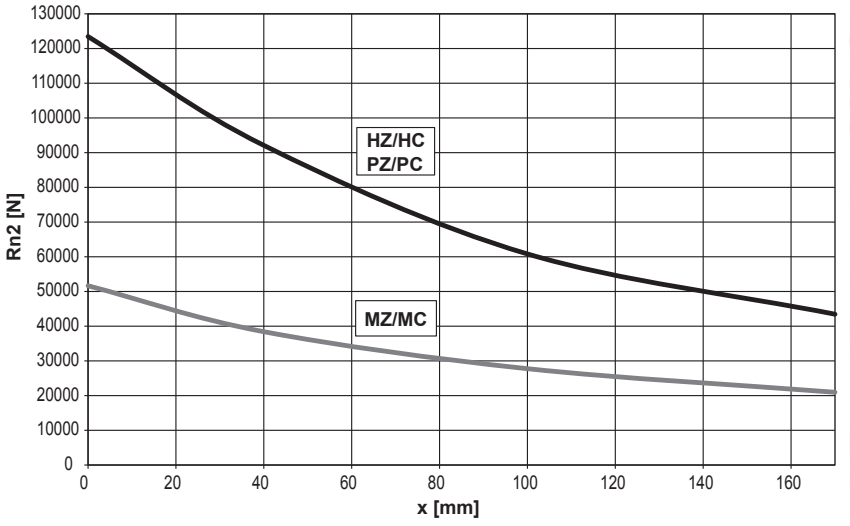

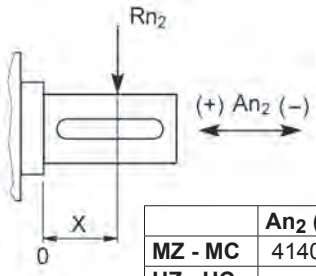

	An2 (+)	An2 (-)
MZ - MC	41400	23000
HZ - HC PZ - PC	80000	40000

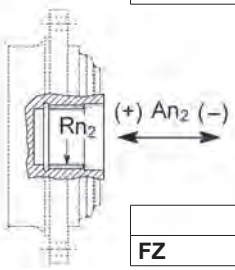

	Rn2	An2 (+/-)
FZ	20887	20887

	$Fh_2 = n_2 \cdot h$	10000	25000	50000	100000	500000	1000000
Load corrective factor fh_2 on shafts	FZ	**2.15**	**1.59**	**1.26**	**1.00**	**0.58**	**0.46**
	fh_2 MZ - MC	**2.15**	**1.59**	**1.26**	**1.00**	**0.58**	**0.46**
	HZ - HC - PZ - PC	**1.49**	**1.49**	**1.23**	**1.00**	**0.62**	**0.50**

Permissible radial loads on input shaft with $Fh_1 : n_1 \cdot h = 250000$

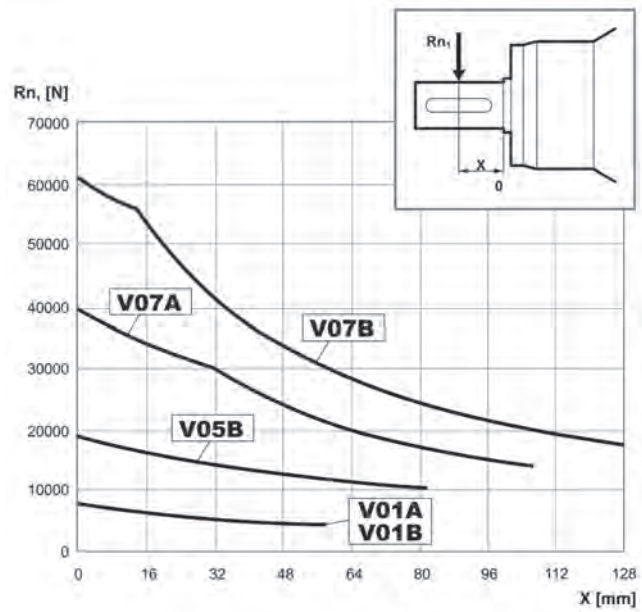

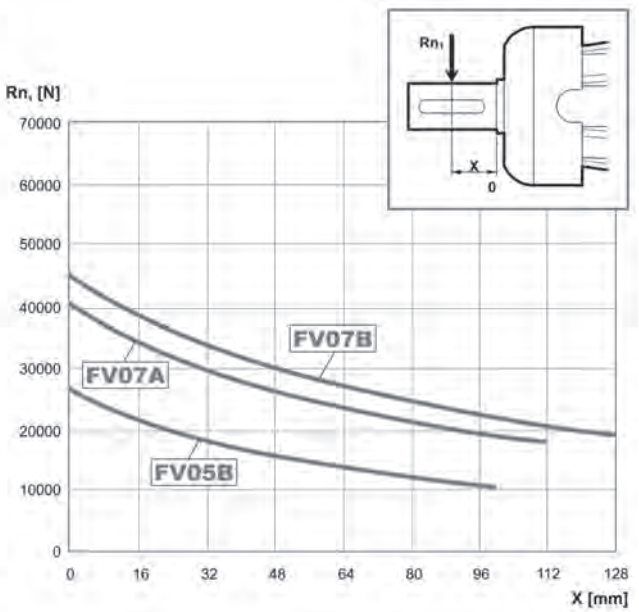

Load corrective factor fh_1 on shafts	$Fh_1 = n_1 \cdot h$	250000	500000	1000000	2000000	5000000	10000000
	fh_1	**1**	**0.79**	**0.63**	**0.50**	**0.37**	**0.29**

307 VK

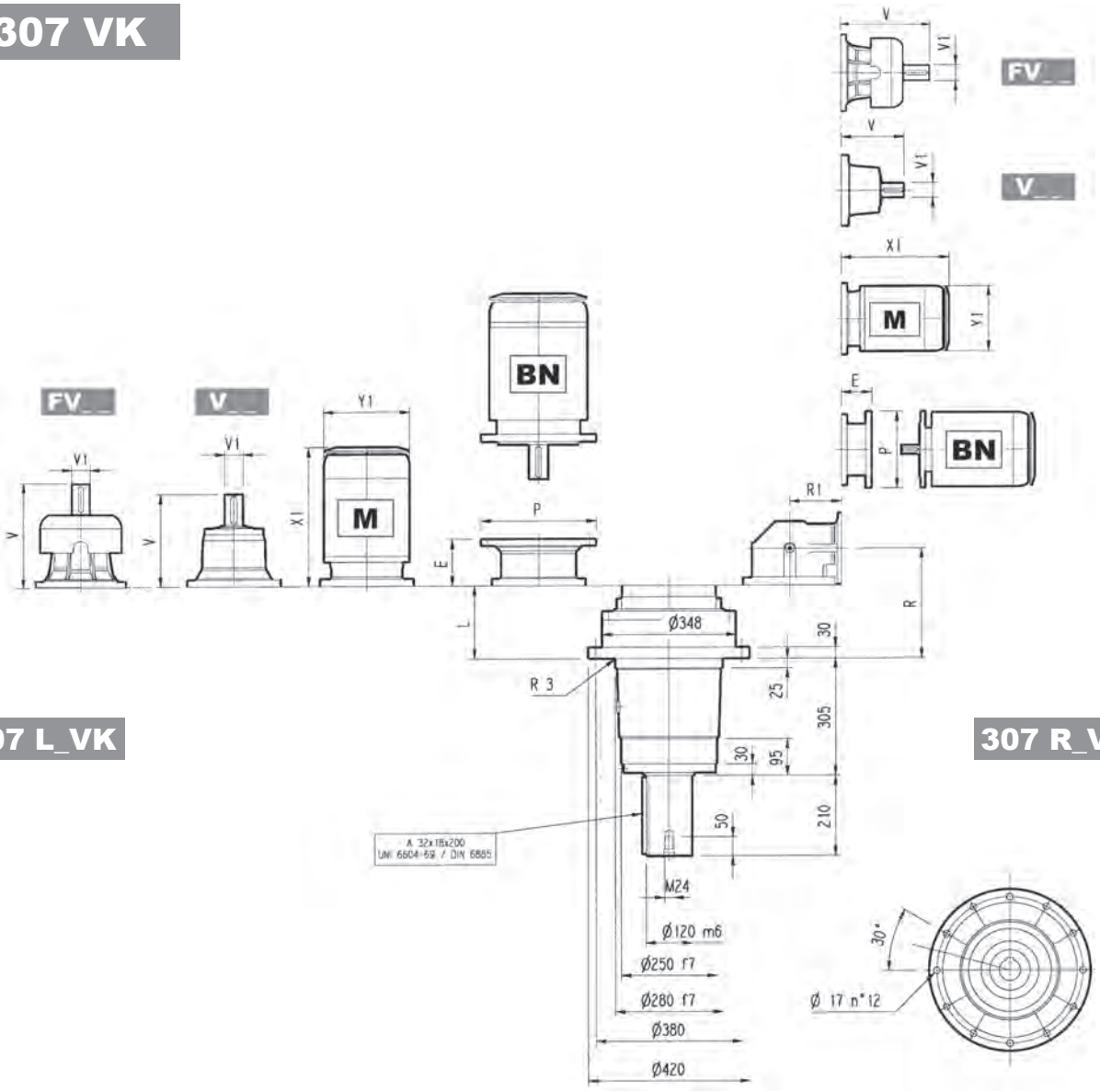

307 L_VK

307 R_VK

	L		P71		P80		P90		P100		P112		P132		P160		P180		P200		P225		P250	
		Kg	E	P	E	P	E	P	E	P	E	P	E	P	E	P	E	P	E	P	E	P	E	P
307 L1	80	145	—	—	—	—	—	—	—	—	—	—	—	—	—	—	195	350	186	400	216	450	215	550
307 L2	169	160	—	—	—	—	—	—	—	—	—	—	114	300	144	350	144	350	174	400	—	—	—	—
307 L3	234	170	65	160	84	200	84	200	94	250	94	250	114	300	144	350	—	—	—	—	—	—	—	—
307 L4	287	175	65	160	84	200	84	200	94	250	94	250	114	300	144	350	—	—	—	—	—	—	—	—

	S1 + M1			S2 + M2S			S3 + M3S			S3 + M3L			S4 + M4			S5 + M5S			S5 + M5L		
	X1	X2	Y1	X1	X2	Y1	X1	X2	Y1	X1	X2	Y1	X1	X2	Y1	X1	X2	Y1	X1	X2	Y1
307 L1	—	—	—	—	—	—	—	—	—	—	—	—	—	—	—	—	—	—	—	—	—
307 L2	—	—	—	—	—	—	—	—	—	—	—	—	460	571	258	552	692	310	596	736	310
307 L3	—	—	—	280	352	156	325	421	195	357	449	195	460	571	258	—	—	—	—	—	—
307 L4	253	314	138	280	352	156	325	421	195	357	449	195	460	571	258	—	—	—	—	—	—

	R	R1		P71		P80		P90		P100		P112		P132		P160		P180		P200	
			Kg	E	P	E	P	E	P	E	P	E	P	E	P	E	P	E	P	E	P
307 R2	199	225	180	—	—	—	—	—	—	—	—	—	—	114	300	144	350	144	350	174	400
307 R3	261	140	170	65	160	84	200	84	200	94	250	94	250	114	300	144	350	—	—	—	—
307 R4	326	122	175	65	160	84	200	84	200	94	250	94	250	114	300	144	350	—	—	—	—

	S1 + M1			S2 + M2S			S3 + M3S			S3 + M3L			S4 + M4			S5 + M5S			S5 + M5L		
	X1	X2	Y1	X1	X2	Y1	X1	X2	Y1	X1	X2	Y1	X1	X2	Y1	X1	X2	Y1	X1	X2	Y1
307 R2	—	—	—	—	—	—	—	—	—	—	—	—	508	619	258	552	692	310	596	736	310
307 R3	253	314	138	328	400	156	373	469	195	405	497	195	508	619	258	—	—	—	—	—	—
307 R4	253	314	138	328	400	156	373	469	195	405	497	195	508	619	258	—	—	—	—	—	—

307 VK

The diagram below allows the calculation of permitted overhung load R_{x2} on the output shaft of gearbox, with radial force applying at a distance x from shaft shoulder.
The curves are relevant to value resulting from the relationship of trust load A_{n2} to radial load R_{n2}, based on n_2 = 10 min^{-1} and 10000 hrs theoretical lifetime.

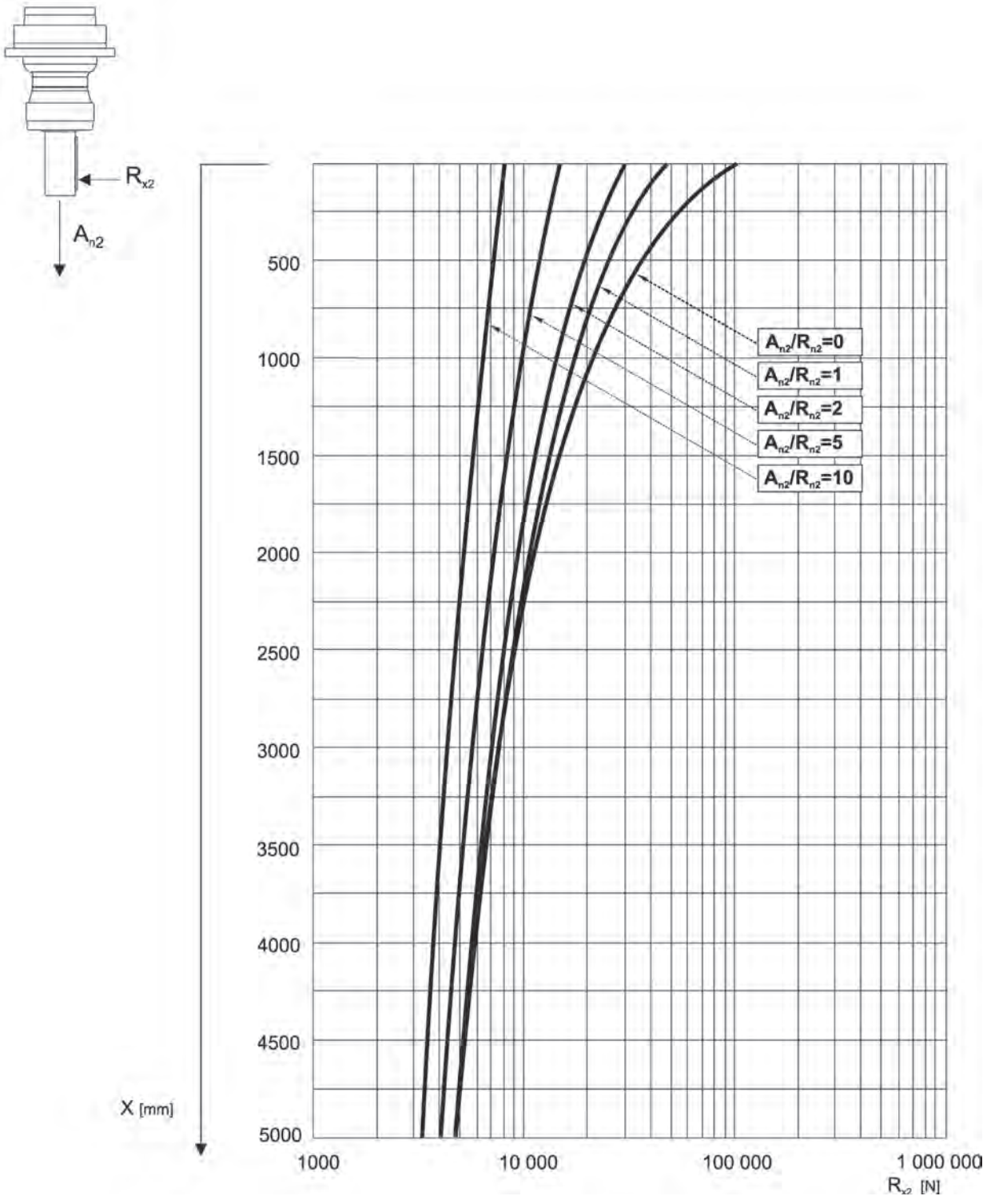

309 L

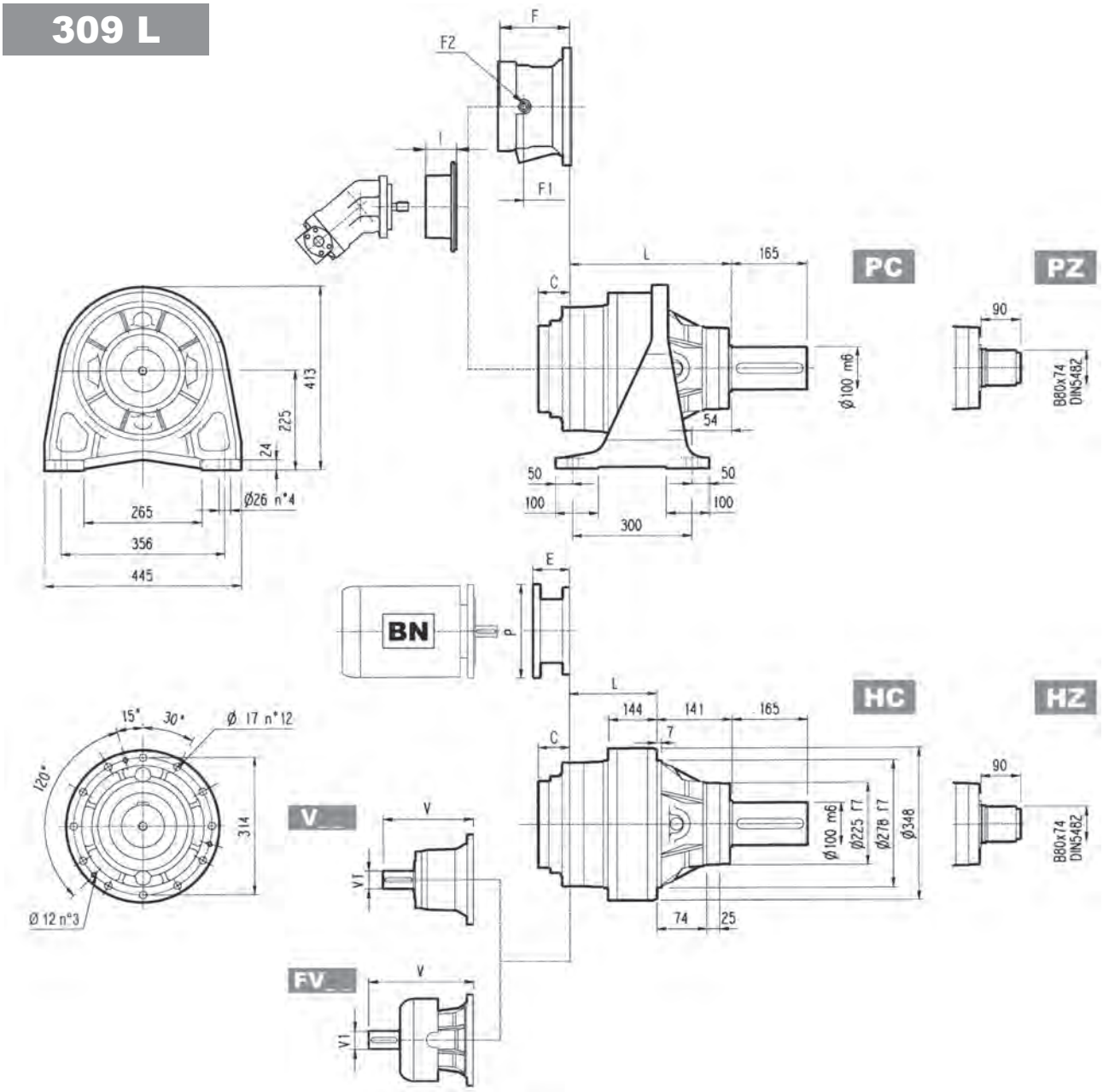

	L				Kg			
	PC - PZ	HC - HZ	FZ	FP - FDK	PC - PZ	HC - HZ	FZ	FP - FDK
309 L1	267	126	99	101	130	115	95	100
309 L2	356	215	188	190	142	127	107	112
309 L3	421	280	253	255	149	134	114	119
309 L4	474	333	306	308	153	138	118	123

	V	V1	Kg	V	V1	Kg	V	V1	Kg	V	V1	Kg	C	Input	I	F	F1	F2	Type	Input	Kg
309 L1	315	80	35	313	60	28	375	80	48	363	60	34	51	B		201	153	1/4 G	6	B	28
309 L2	239	48	15	—	—	—	276	48	17	—	—	—	37	A		145	95	1/4 G	5	A	16
309 L3	137.5	24	6	158	38	7	—	—	—	—	—	—	37	A		105	65	1/4 G	4	A	10
309 L4	137.5	24	6	158	38	7	—	—	—	—	—	—	37	A	457	105	65	1/4 G	4	A	10

309 L

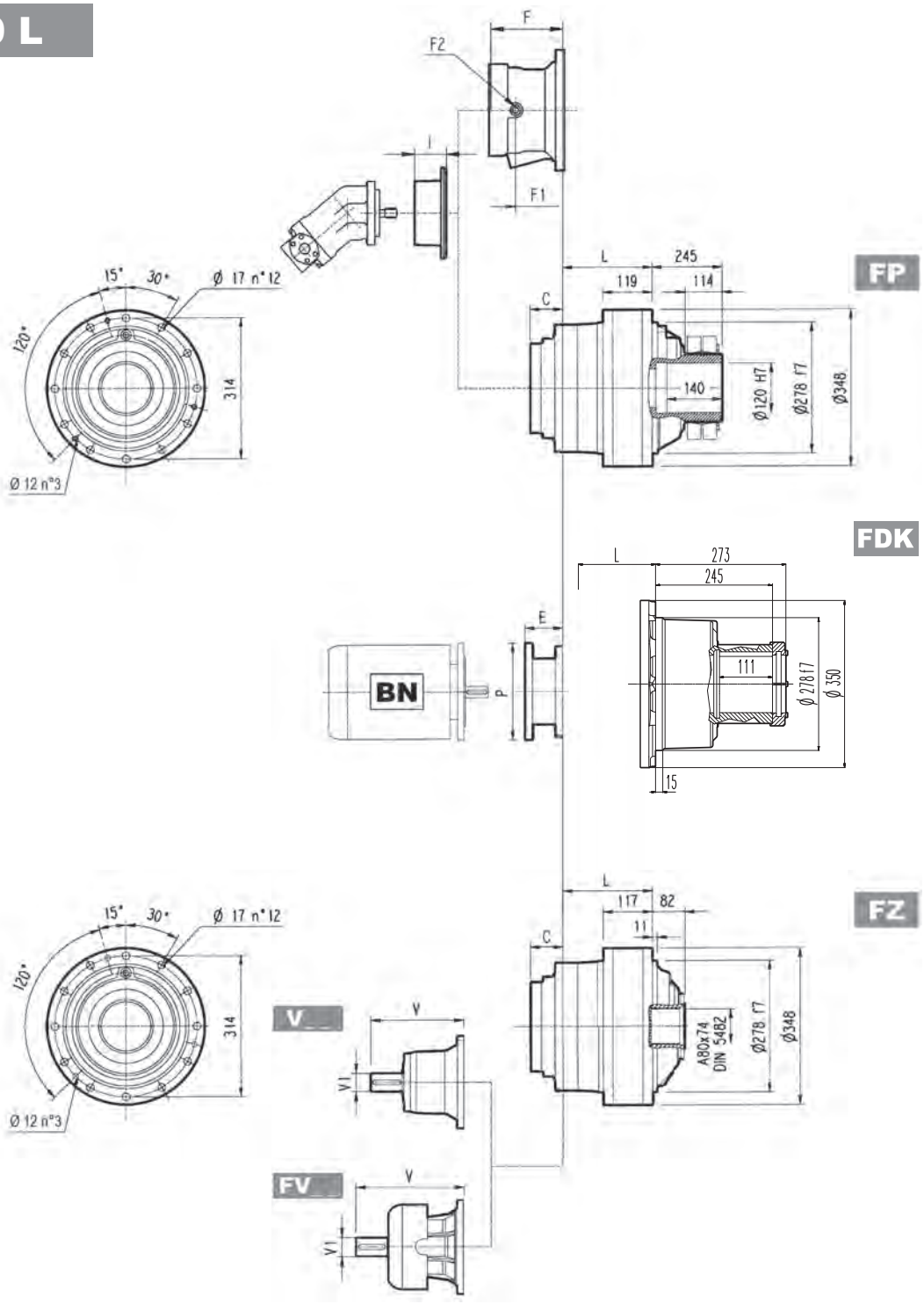

FP M_{2max} = 29000 Nm

	P71		P80		P90		P100		P112		P132		P160		P180		P200		P225		P250	
	E	P	E	P	E	P	E	P	E	P	E	P	E	P	E	P	E	P	E	P	E	P
309 L1	—	—	—	—	—	—	—	—	—	—	—	—	—	—	195	350	186	400	216	450	216	550
309 L2	—	—	—	—	—	—	—	—	—	—	114	300	144	350	144	350	174	400	—	—	—	—
309 L3	65	160	84	200	84	200	94	250	94	250	114	300	144	350	—	—	—	—	—	—	—	—
309 L4	65	160	84	200	84	200	94	250	94	250	114	300	144	350	—	—	—	—	—	—	—	—

309 R

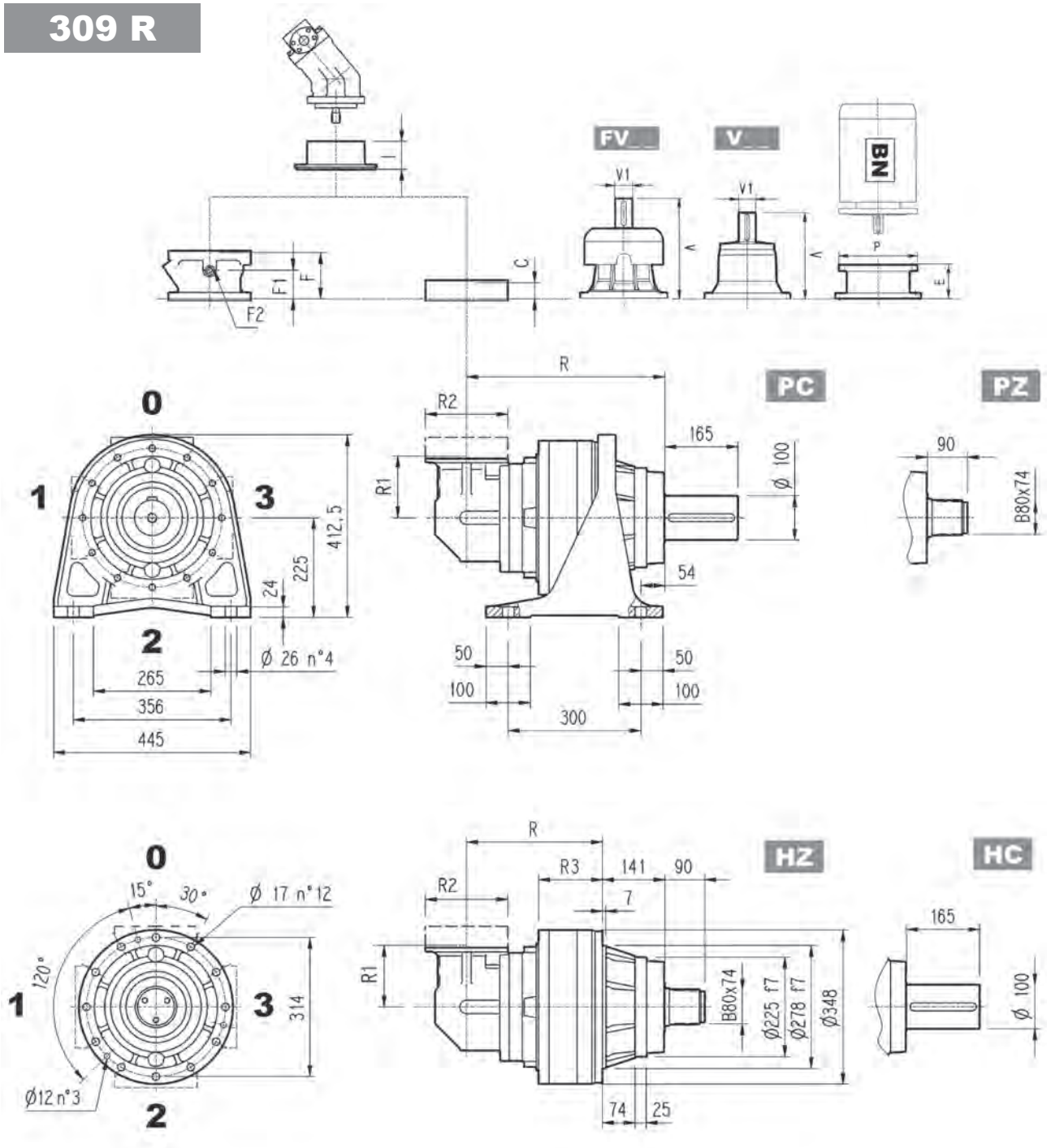

	R				R1	R2	R3			Kg			
	PC-PZ	HC-HZ	FZ	FP - FDK			HC-HZ	FZ	FP	PC-PZ	HC-HZ	FZ	FP - FDK
309 R2	386	245	218	220	225	245	168	141	143	180	165	145	150
309 R3	448	307	280	282	140	186	144	117	119	162	147	127	132
309 R4	513	372	345	347	122	186	144	117	119	163	148	128	133

	V	V1	Kg	V	V1	Kg	V	V1	Kg	V	V1	Kg	C	Input	I	F	F1	F2	Type	Input	Kg
309 R2	239	48	15	—	—	—	276	48	17	—	—	—	37	A		145	95	1/4 G	5	A	16
309 R3	137.5	24	6	158	38	7	—	—	—	—	—	—	37	A		105	65	1/4 G	4	A	10
309 R4	137.5	24	6	158	38	7	—	—	—	—	—	—	37	A	457	105	65	1/4 G	4	A	10

309 R

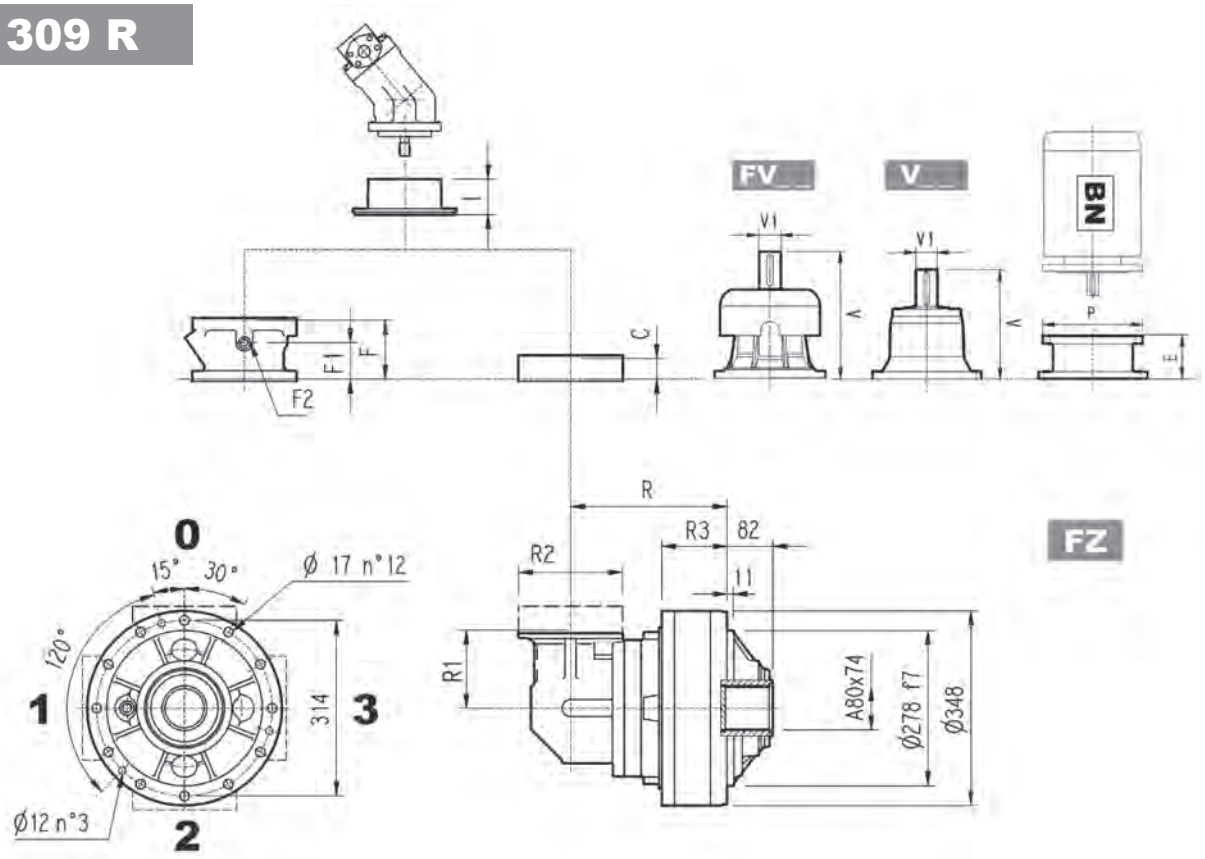

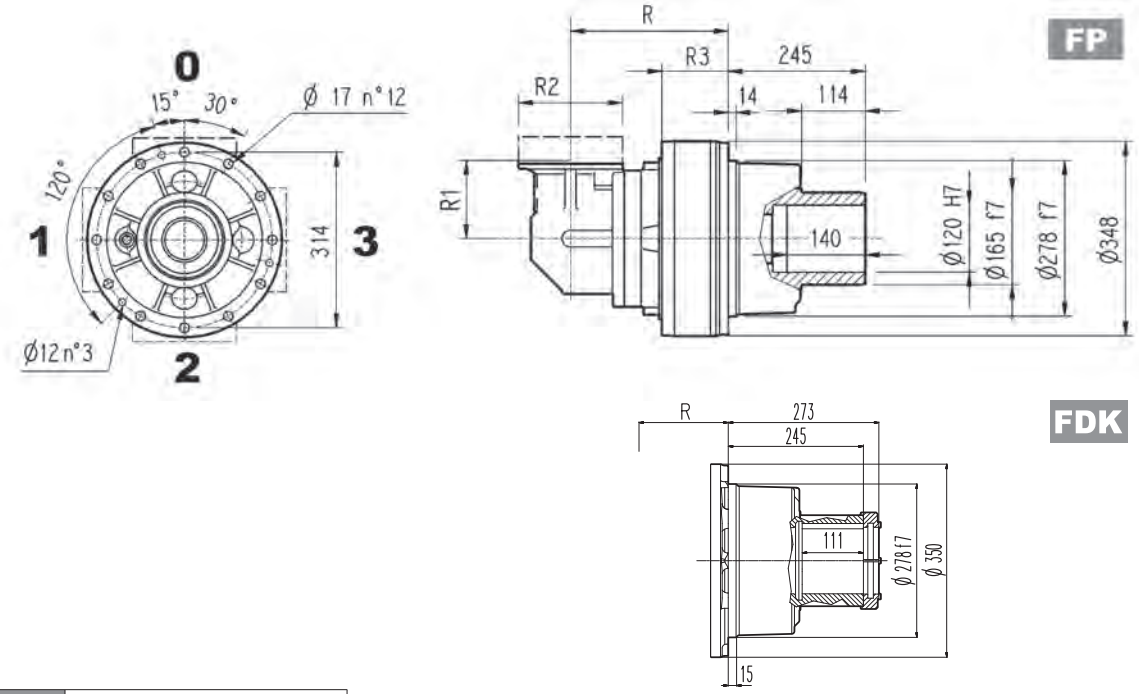

FP M_{2max} = 29000 Nm

	P71		P80		P90		P100		P112		P132		P160		P180		P200	
	E	P	E	P	E	P	E	P	E	P	E	P	E	P	E	P	E	P
309 R2	—	—	—	—	—	—	—	—	—	—	114	300	144	350	144	350	174	400
309 R3	65	160	84	200	84	200	94	250	94	250	114	300	144	350	—	—	—	—
309 R4	65	160	84	200	84	200	94	250	94	250	114	300	144	350	—	—	—	—

3/V 09 L3

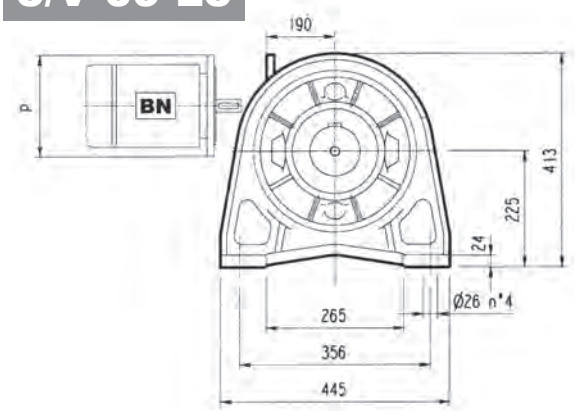

PC

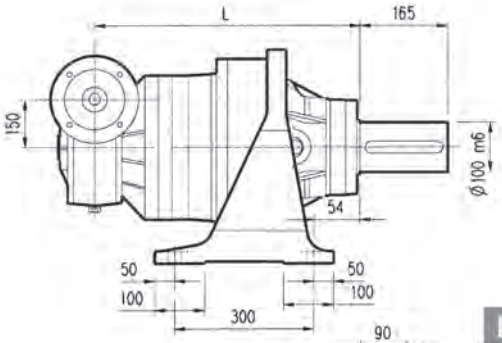

HZ PZ

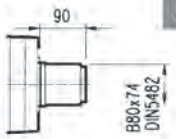

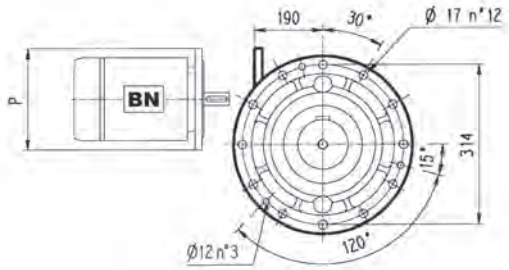

HC

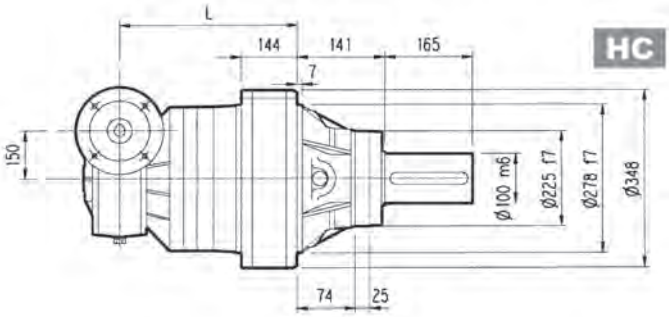

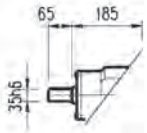

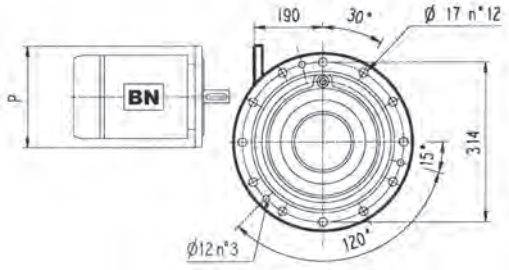

FP

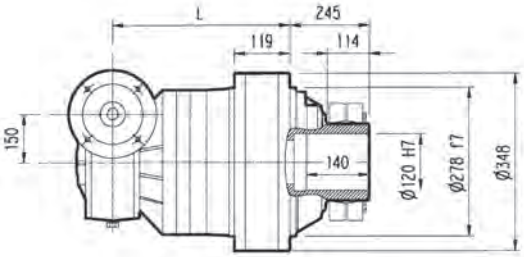

FZ

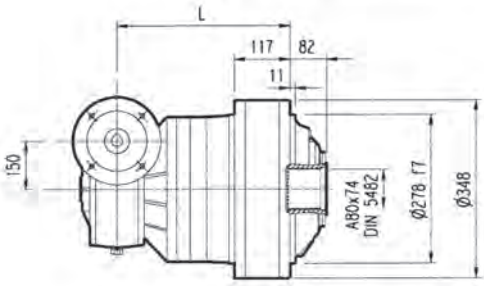

FDK

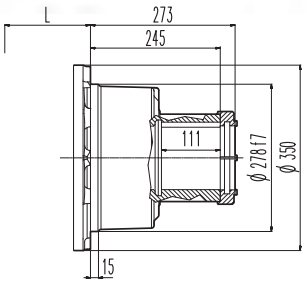

FP | **M_{2max} = 29000 Nm**

	L				Kg				P100	P112	P132	P160
	PC - PZ	HC - HZ	FZ	FP - FDK	PC - PZ	HC - HZ	FZ	FP - FDK	P	P	P	P
3/V 09 L3	530	389	362	364	202	187	167	172	250	250	300	350

Bonfiglioli Riduttori

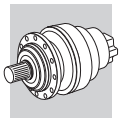

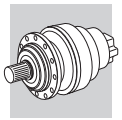

309 L | 309 R | 3/V 09 L3

HC

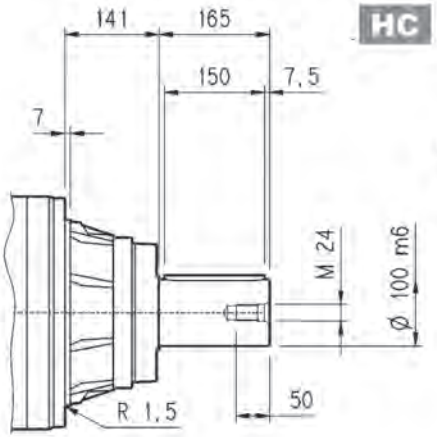

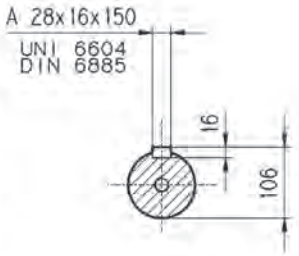

PC

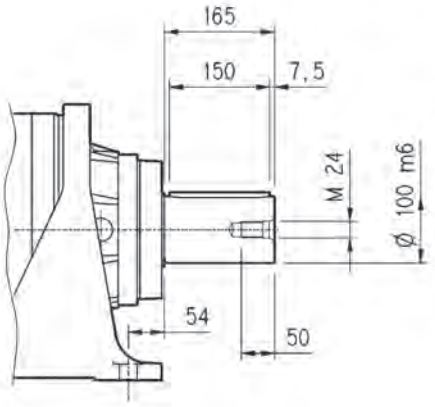

HZ

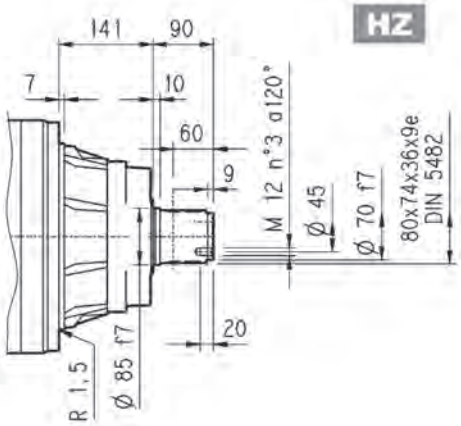

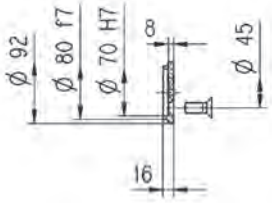

FZ

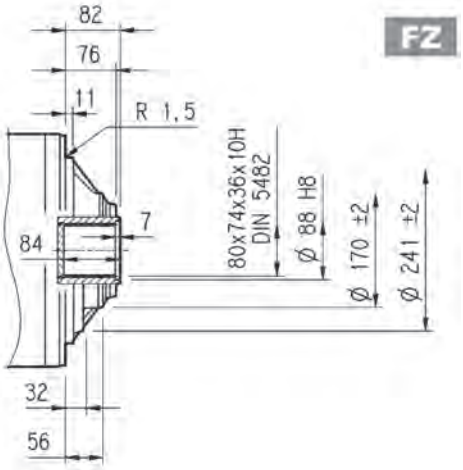

FP

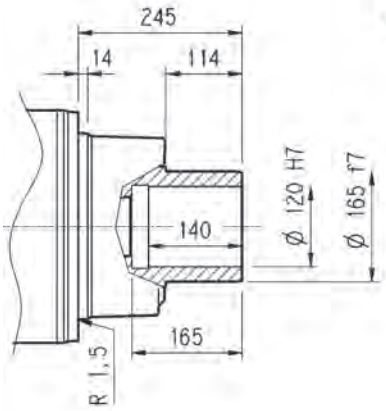

FDK

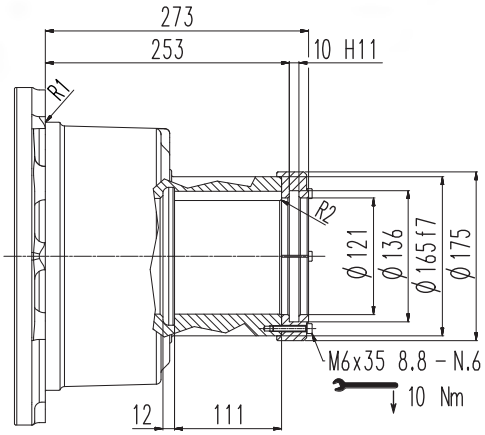

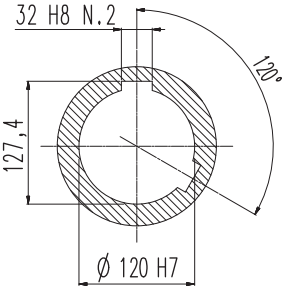

FP	M_{2max} = 29000 Nm

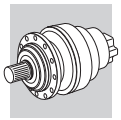

309 L | 309 R | 3/V 09 L3

Flange

W0A

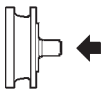

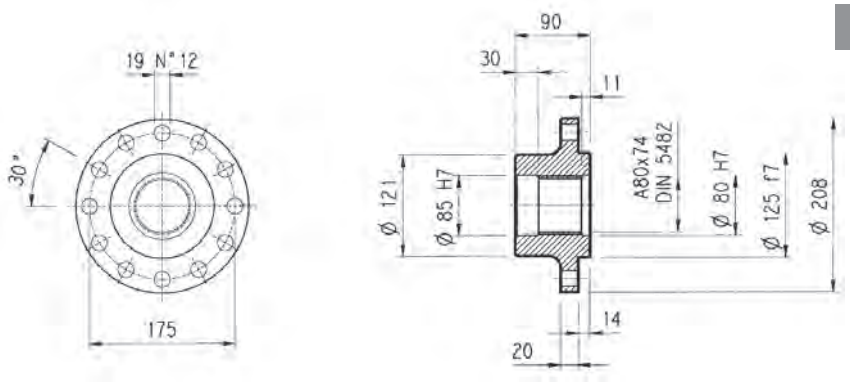

Material: Steel C40

Pinions

P...

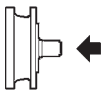

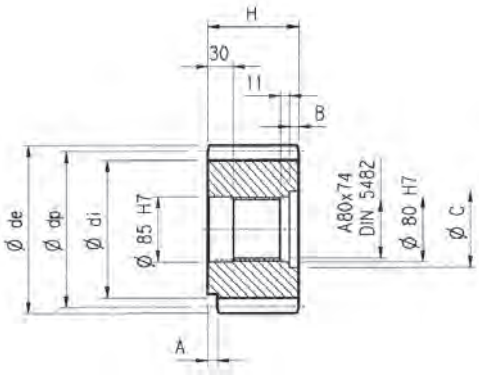

α = 20°

	m	z	x	dp	di	de	H	A	B	C	Material
PFG	8	16	0.500	128	117	149.5	90	—	—	—	Steel 39NiCrMo3 hardened and tempered
PHC	10	12	0.450	120	104	145	90	—	—	—	
PHE	10	14	0.320	140	121	165	116	13	26	95	
PHF	10	15	0.150	150	130	171.5	107	20	17	100	
PHG	10	16	0.500	160	145	186	90	—	—	—	Steel 18NiCrMo5 case hardened
PHH1	10	17	—	170	145	189	90	—	—	—	
PHH2	10	17	0.500	170	154	198	90	—	—	—	
PLD	12	13	0.500	156	138	192	102	—	12	95	Steel 39NiCrMo3 hardened and tempered
PLE	12	14	0.500	168	150	199.2	90	—	—	—	
PLI	12	18	0.500	216	198	249.6	107	7	17	95	
PLT	12	26	—	312	282	336	90	10	—	—	Steel 18NiCrMo5 case hardened

Sleeve coupling

M0A

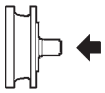

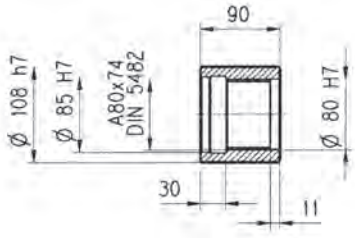

Material: Steel 16CrNi4

Splined bars

B0A

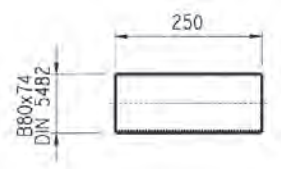

Material: Case hardening steel 18NiCrMo5 UNI 5331
must be case hardened 50-55 HRC

Shrink disc

G0A

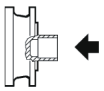

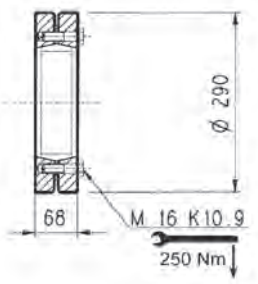

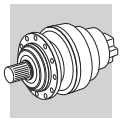

309 L 309 R

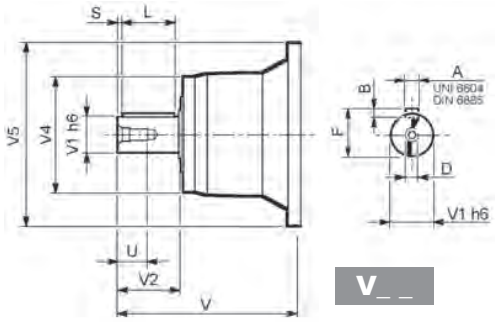

V_ _

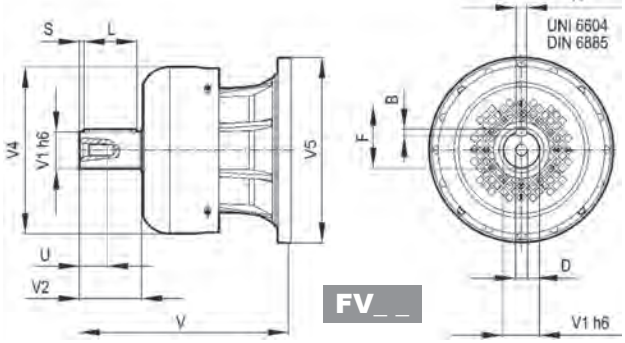

FV_ _

		V	V1	V2	V4	V5	A	B	F	L	S	D	U
309 L1	V07B	315	80	130	200	345	22	14	85	110	10	M16	36
	FV07B	375	80	130	347.5	348	22	14	85	110	10	M16	36
	V07A	313	60	105	155	345	18	11	64	90	7.5	M16	36
	FV07A	363	60	105	309	348	18	11	64	90	7.5	M16	36
309 L2	V05B	239	48	82	155	245	14	9	51.5	70	6	M16	36
	FV05B	276	48	82	219.5	244	14	9	51.5	70	6	M16	36
309 L3	V01A	137.5	24	36	120	186	8	7	27	30	3	M8	19
	V01B	158	38	58	120	186	10	8	41	50	4	M12	28
309 L4	V01A	137.5	24	36	120	186	8	7	27	30	3	M8	19
	V01B	158	38	58	120	186	10	8	41	50	4	M12	28
309 R2	V05B	239	48	82	155	245	14	9	51.5	70	6	M16	36
	FV05B	276	48	82	219.5	244	14	9	51.5	70	6	M16	36
309 R3-R4	V01A	137.5	24	36	120	186	8	7	27	30	3	M8	19
	V01B	158	38	58	120	186	10	8	41	50	4	M12	28

309 L 309 R

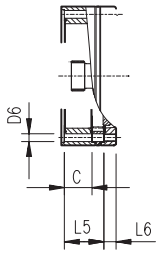

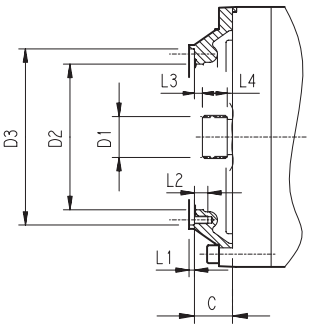

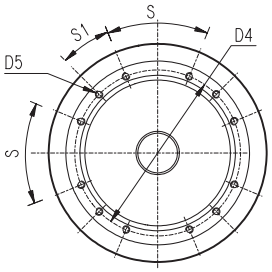

		C	D1	D2	D3	D4	D5	D6	L1	L2	L3	L4	L5	L6	S	S1	Input
309 L1	V9AB	51	58x53 DIN 5482	195	236 H7	222	M10 n°12	—	4	18	11	22	—	—	45°	22.5°	B
309 L2	V9AA	37	40x36 DIN 5482	140	178 H7	165	M10 n°8	—	4	18	9	18	—	—	45°	45°	A
309 L3	V9AA	37	40x36 DIN 5482	140	178 H7	165	M10 n°8	11	4	—	9	18	65	18	45°	45°	A
309 L4	V9AA	37	40x36 DIN 5482	140	178 H7	165	M10 n°8	11	4	—	9	18	118	18	45°	45°	A
309 R2	V9AA	37	40x36 DIN 5482	140	178 H7	165	M10 n°8	11	4	18	9	18	—	—	45°	45°	A
309 R3-R4	V9AA	37	40x36 DIN 5482	140	178 H7	165	M10 n°8	11	4	—	9	18	37	18	45°	45°	A

3/V 09 L3

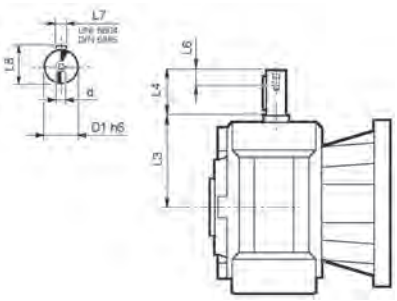

	D1 h6	L3	L4	L6	L7	L8	d
3/V 09 L3_HS	35	185	65	20	10	38	M8

Bonfiglioli Riduttori

309 L | 309 R | 3/V 09 L3

Permissible radial and axial loads on output shaft with $Fh_2 : n_2 \cdot h = 100000$

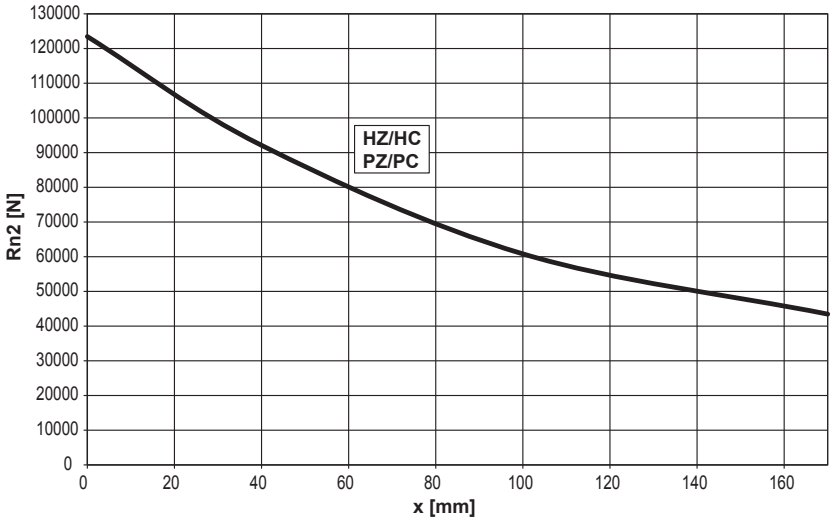

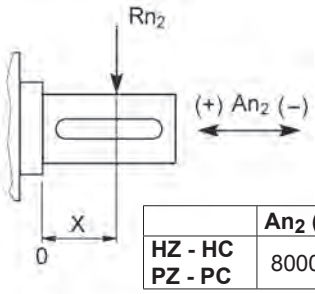

	An2 (+)	An2 (-)
HZ - HC PZ - PC	80000	40000

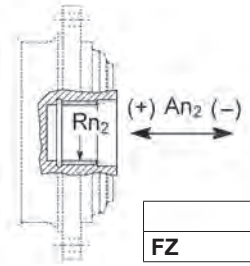

	Rn2	An2 (+/-)
FZ	16710	17174

Load corrective factor fh_2 on shafts	$Fh_2 = n_2 \cdot h$		10000	25000	50000	100000	500000	1000000
	fh_2	FZ	**2.15**	**1.59**	**1.26**	**1.00**	**0.58**	**0.46**
		HZ - HC - PZ - PC	**1.49**	**1.49**	**1.23**	**1.00**	**0.62**	**0.50**

Permissible radial loads on input shaft with $Fh_1 : n_1 \cdot h = 250000$

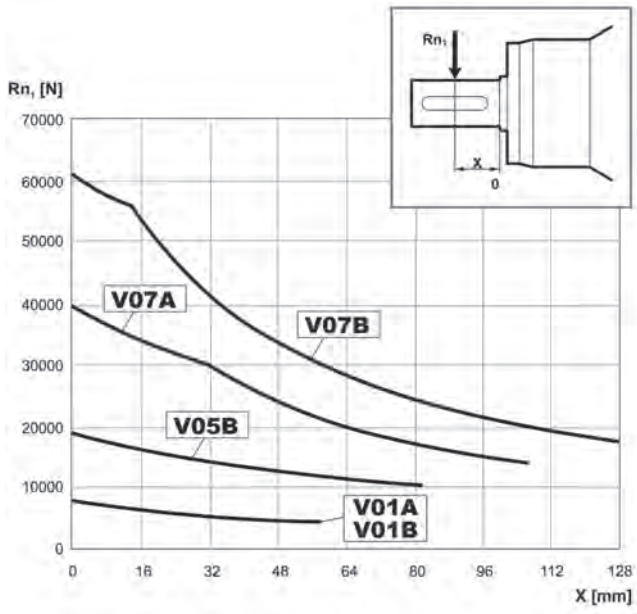

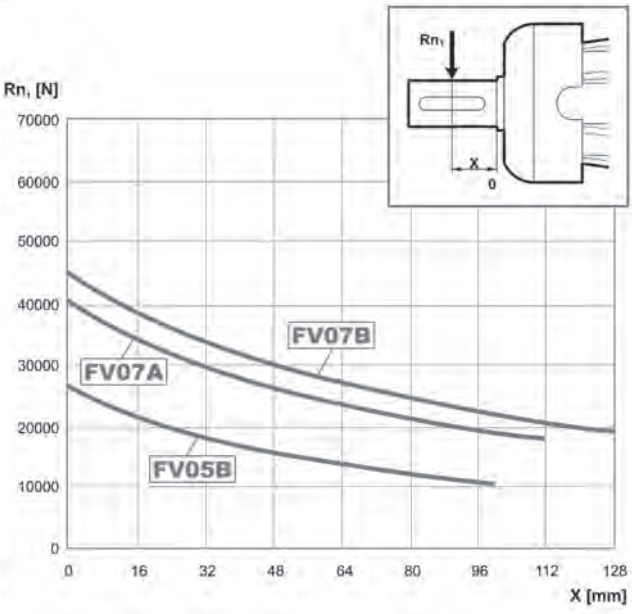

Load corrective factor fh_1 on shafts	$Fh_1 = n_1 \cdot h$	250000	500000	1000000	2000000	5000000	10000000
	fh_1	**1**	**0.79**	**0.63**	**0.50**	**0.37**	**0.29**

309 VK

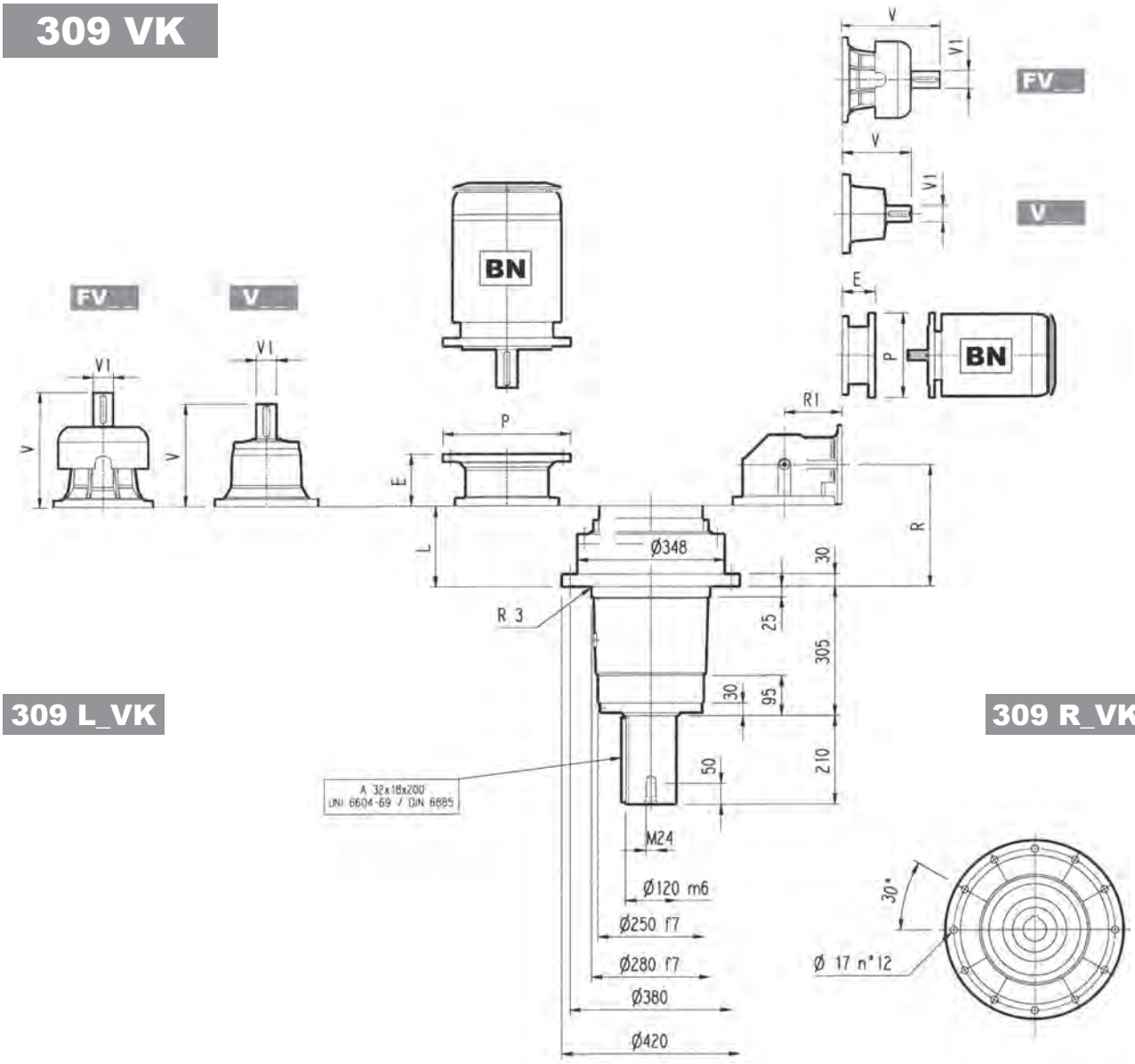

309 L_VK

309 R_VK

	L	Kg	V	V1	Kg	V	V1	Kg	V	V1	Kg	V	V1	Kg
309 L1	102	165	315	80	35	313	60	28	375	80	48	363	60	34
309 L2	191	180	239	48	15	—	—	—	276	48	17	—	—	—
309 L3	256	190	137.5	24	6	158	38	7	—	—	—	—	—	—
309 L4	309	195	137.5	24	6	158	38	7	—	—	—	—	—	—

	P71		P80		P90		P100		P112		P132		P160		P180		P200		P225		P250	
	E	P	E	P	E	P	E	P	E	P	E	P	E	P	E	P	E	P	E	P	E	P
309 L1	—	—	—	—	—	—	—	—	—	—	—	—	—	—	195	350	186	400	216	450	216	450
309 L2	—	—	—	—	—	—	—	—	—	—	114	300	144	350	144	350	174	400	—	—	—	—
309 L3	65	160	84	200	84	200	94	250	94	250	114	300	144	350	—	—	—	—	—	—	—	—
309 L4	65	160	84	200	84	200	94	250	94	250	114	300	144	350	—	—	—	—	—	—	—	—

	R	R1	Kg	V	V1	Kg	V	V1	Kg	V	V1	Kg	V	V1	Kg
309 R2	221	225	200	239	48	15	—	—	—	276	48	17	—	—	—
309 R3	283	140	190	137.5	24	6	158	38	7	—	—	—	—	—	—
309 R4	348	122	195	137.5	24	6	158	38	7	—	—	—	—	—	—

	P71		P80		P90		P100		P112		P132		P160		P180		P200	
	E	P	E	P	E	P	E	P	E	P	E	P	E	P	E	P	E	P
309 R2	—	—	—	—	—	—	—	—	—	—	114	300	144	350	144	350	174	400
309 R3	65	160	84	200	84	200	94	250	94	250	114	300	144	350	—	—	—	—
309 R4	65	160	84	200	84	200	94	250	94	250	114	300	144	350	—	—	—	—

309 VK

The diagram below allows the calculation of permitted overhung load R_{x2} on the output shaft of gearbox, with radial force applying at a distance x from shaft shoulder.
The curves are relevant to value resulting from the relationship of trust load A_{n2} to radial load R_{n2}, based on n_2 = 10 min^{-1} and 10000 hrs theoretical lifetime.

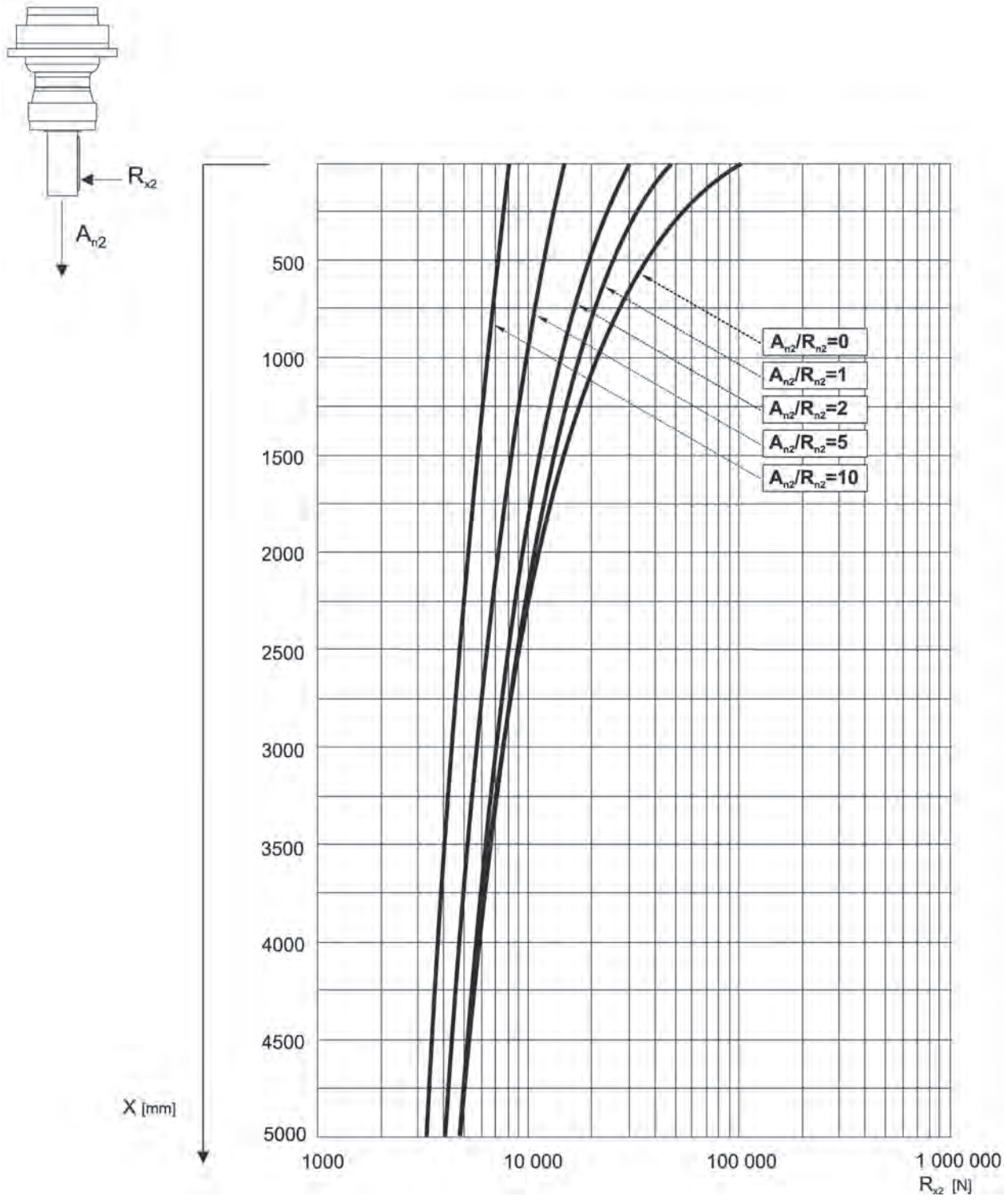

310 L

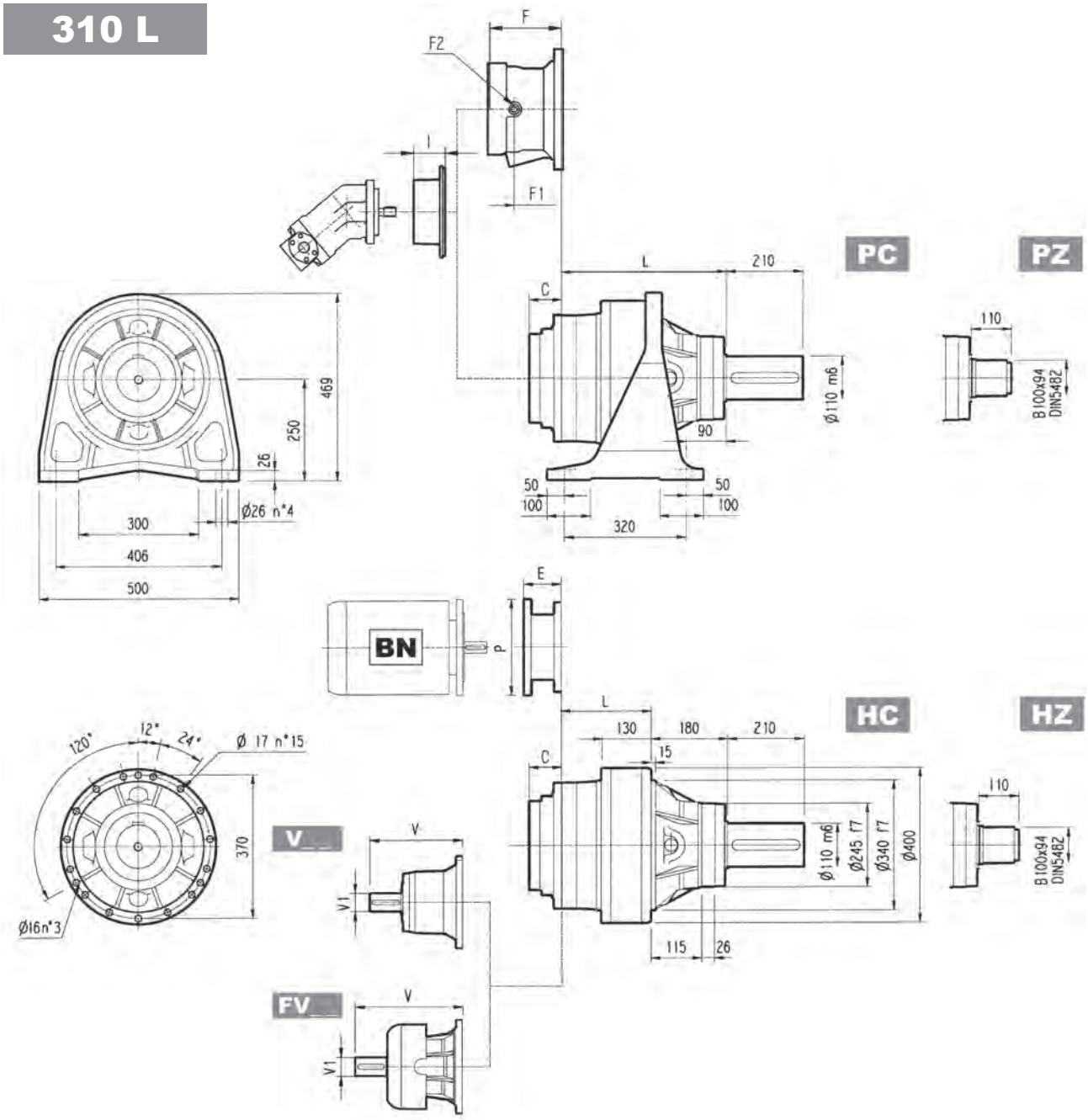

	L				Kg			
	PC - PZ	HC - HZ	FZ	FP - FDK	PC - PZ	HC - HZ	FZ	FP - FDK
310 L1	288	108	88	88	155	135	110	115
310 L2	424	244	224	224	185	165	140	145
310 L3	489	309	289	289	194	174	149	154
310 L4	542	362	342	342	198	178	153	158

	V	V1	Kg	V	V1	Kg	V	V1	Kg	V	V1	Kg	C	Input	I	F	F1	F2	Type	Input	Kg
310 L1	377	80	50	—	—	—	457	80	63	—	—	—	88	C		—	—	—	—	—	—
310 L2	307	60	23	—	—	—	357	60	28	—	—	—	45	B		195	147	1/4 G	6	B	28
310 L3	239	48	15	—	—	—	276	48	17	—	—	—	37	A		145	95	1/4 G	5	A	16
310 L4	137.5	24	6	158	38	7	—	—	—	—	—	—	37	A	457	105	65	1/4 G	4	A	10

310 L

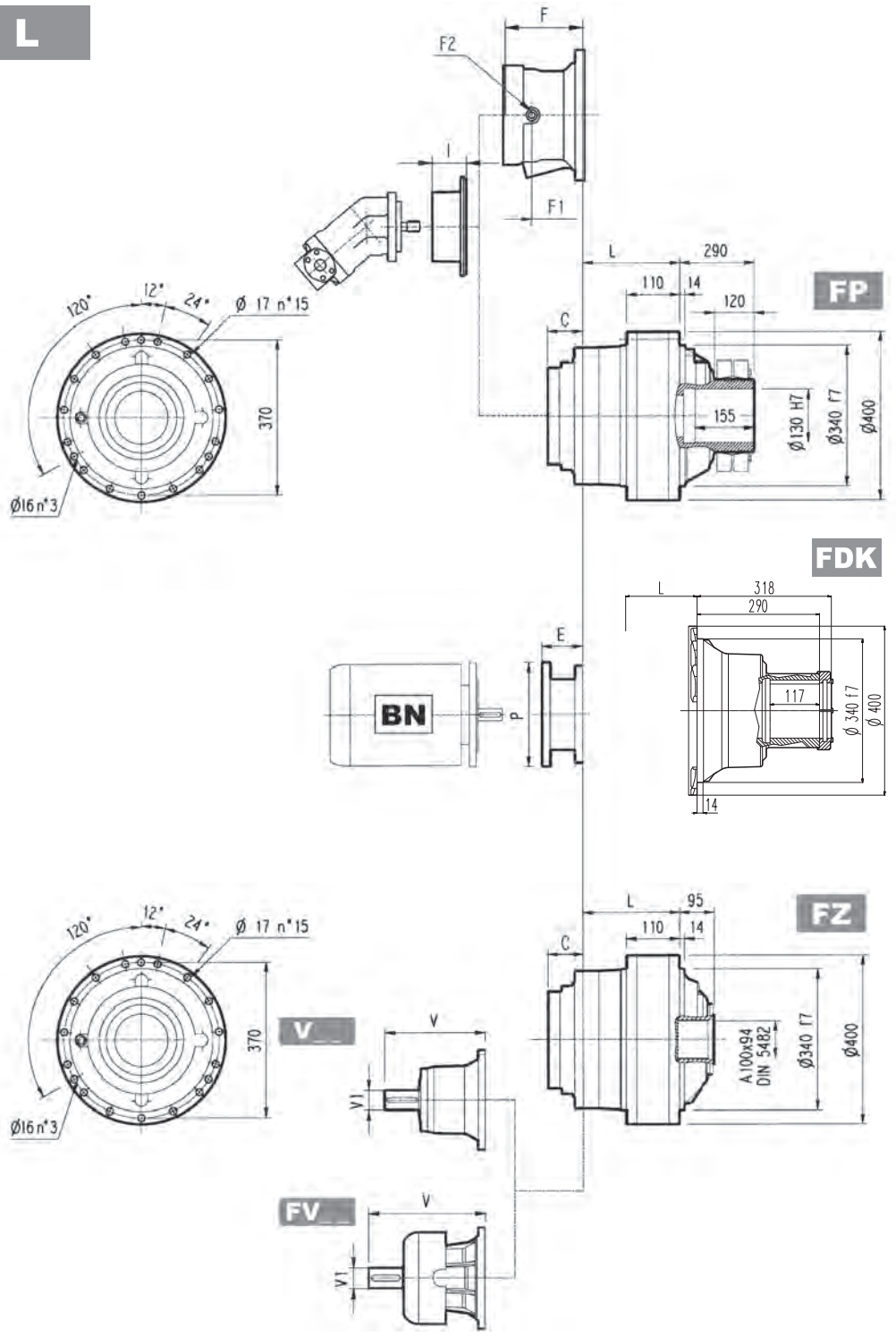

FP M_{2max} = 44000 Nm

	P71		P80		P90		P100		P112		P132		P160		P180		P200		P225		P250	
	E	P	E	P	E	P	E	P	E	P	E	P	E	P	E	P	E	P	E	P	E	P
310 L1	—	—	—	—	—	—	—	—	—	—	—	—	—	—	—	—	271	400	301	450	281	550
310 L2	—	—	—	—	—	—	—	—	—	—	—	—	152	350	153	350	183	400	212	450	193	550
310 L3	—	—	—	—	—	—	—	—	—	—	114	300	144	350	144	350	174	400	—	—	—	—
310 L4	65	160	84	200	84	200	94	250	94	250	114	300	144	350	—	—	—	—	—	—	—	—

310 R

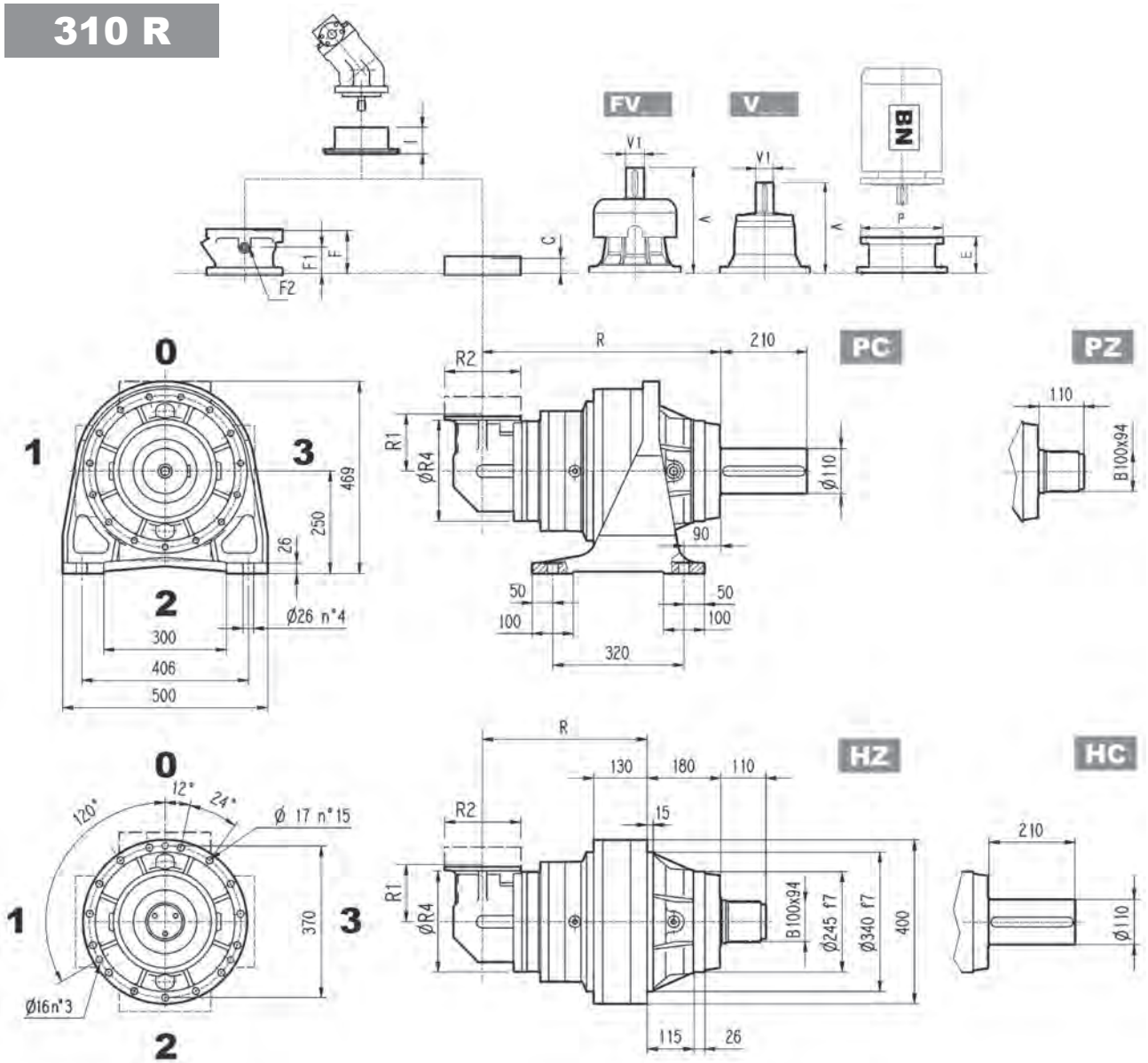

	R				R1	R2	R4	Kg			
	PC-PZ	HC-HZ	FZ	FP - FDK				PC-PZ	HC-HZ	FZ	FP - FDK
310 R2 (B)	495	315	295	295	345	292	400	280	260	240	250
310 R2 (C)	513	333	313	313	390	292	480	300	280	260	270
310 R3	561	381	361	361	140	186	244	209	189	164	169
310 R4	581	401	381	381	140	186	244	214	194	169	174

	V	V1	Kg	V	V1	Kg	V	V1	Kg	V	V1	Kg	C	Input	I	F	F1	F2	Type	Input	Kg
310 R2 (B)	307	60	23	—	—	—	357	60	28	—	—	—	45	B	457	195	147	1/4 G	6	B	28
310 R2 (C)	307	60	23	—	—	—	357	60	28	—	—	—	45	B		195	147	1/4 G	6	B	28
310 R3	137.5	24	6	158	38	7	—	—	—	—	—	—	37	A		145	95	1/4 G	5	A	16
310 R4	137.5	24	6	158	38	7	—	—	—	—	—	—	37	A		105	65	1/4 G	4	A	10

310 R

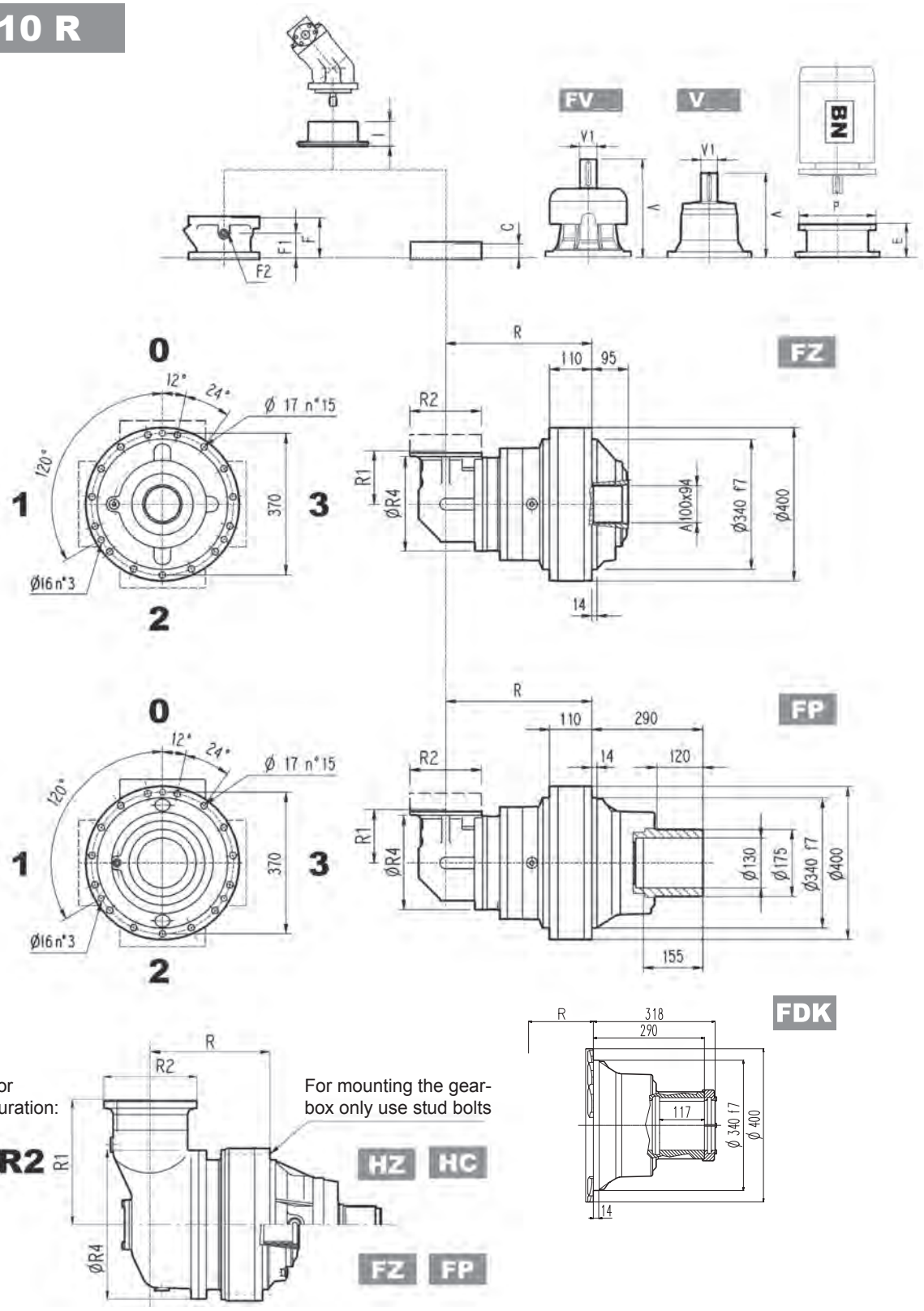

FP M_{2max} = 44000 Nm

	P71		P80		P90		P100		P112		P132		P160		P180		P200		P225	
	E	P	E	P	E	P	E	P	E	P	E	P	E	P	E	P	E	P	E	P
310 R2 (B)	—	—	—	—	—	—	—	—	—	—	—	—	152	350	152	350	182	400	212	450
310 R2 (C)	—	—	—	—	—	—	—	—	—	—	—	—	152	350	152	350	182	400	212	450
310 R3	65	160	84	200	84	200	94	250	94	250	114	300	144	350	—	—	—	—	—	—
310 R4	65	160	84	200	84	200	94	250	94	250	114	300	144	350	—	—	—	—	—	—

3/V 10 L3

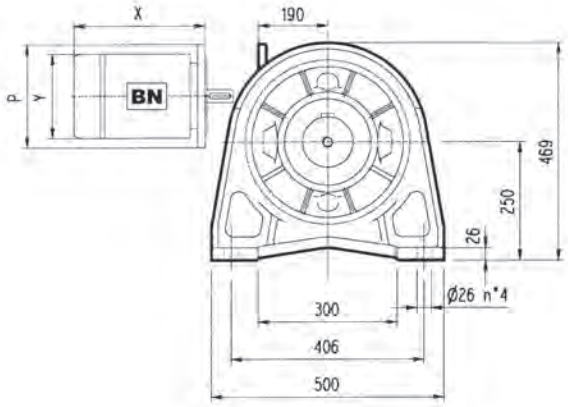

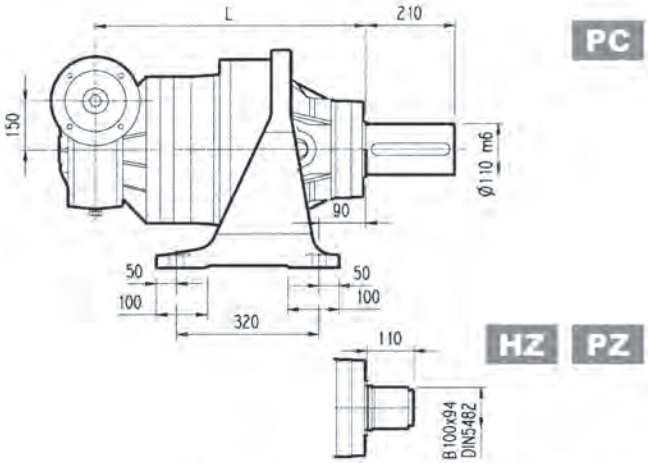

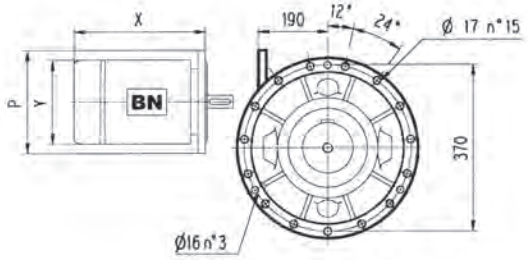

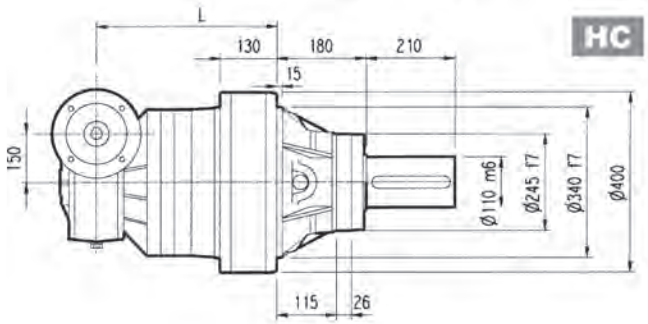

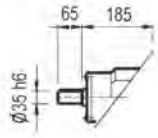

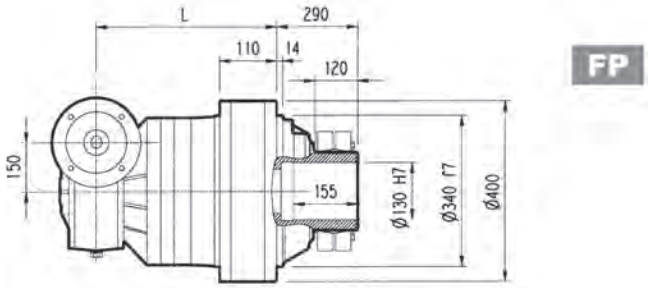

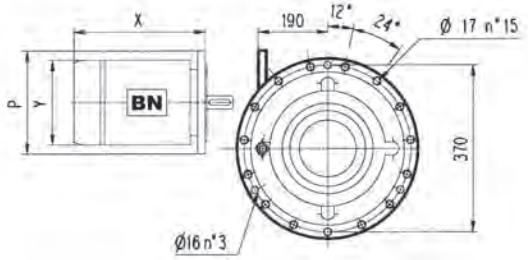

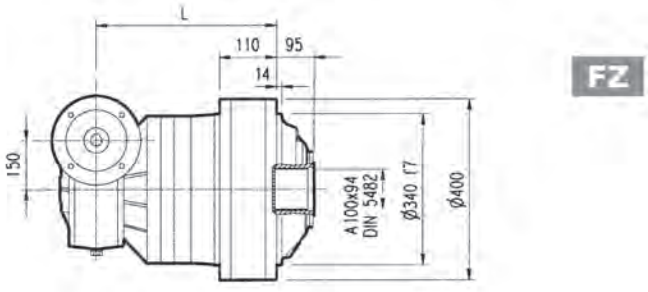

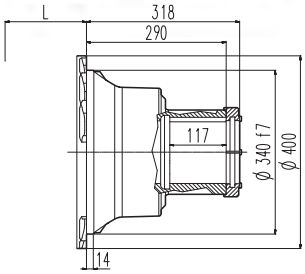

FP | **M_{2max} = 44000 Nm**

	L				Kg				P71	P80	P90	P100	P112	P132	P160
	PC - PZ	HC - HZ	FZ	FP	PC - PZ	HC - HZ	FZ	FP	P	P	P	P	P	P	P
3/V 10 L3	608	428	408	408	245	225	200	205	—	—	—	250	250	300	300

Bonfiglioli Riduttori

3/V 10 L4

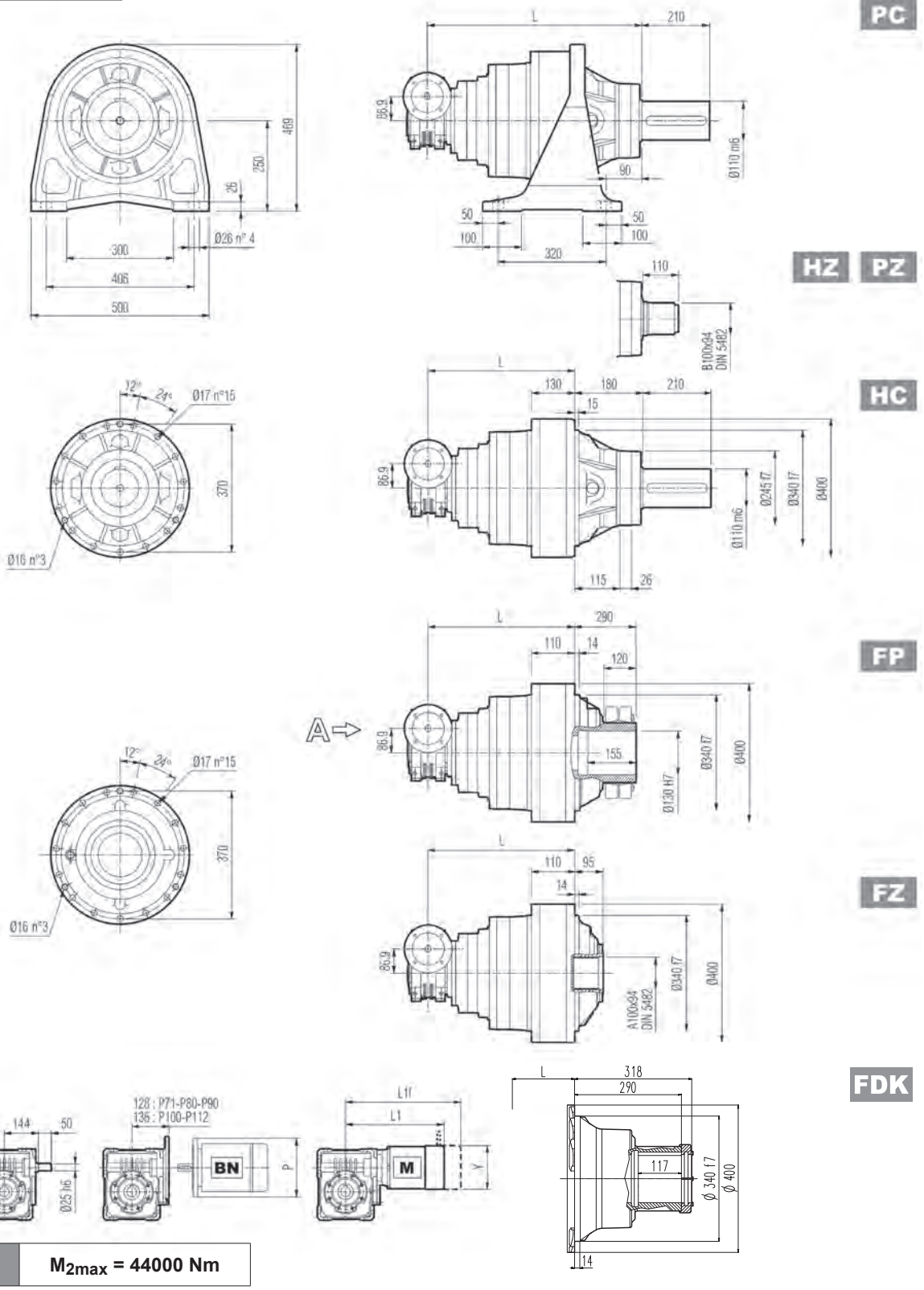

FP M_{2max} = 44000 Nm

	L				Kg			
	PC - PZ	HC - HZ	FZ	FP - FDK	PC - PZ	HC - HZ	FZ	FP - FDK
3/V 10 L4	634	454	434	434	210	190	165	170

	P71	P80	P90	P100	P112	S1 + M1			S2 + M2S			S3 + M3S			S3 + M3L		
	P	P	P	P	P	L1	L1f	Y	L1	L1f	Y	L1	L1f	Y	L1	L1f	Y
3/V 10 L4	160	200	200	250	250	324	385	138	349	425	156	392	477	193	424	515	193

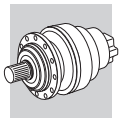

310 L | 310 R | 3/V 10 L

HC

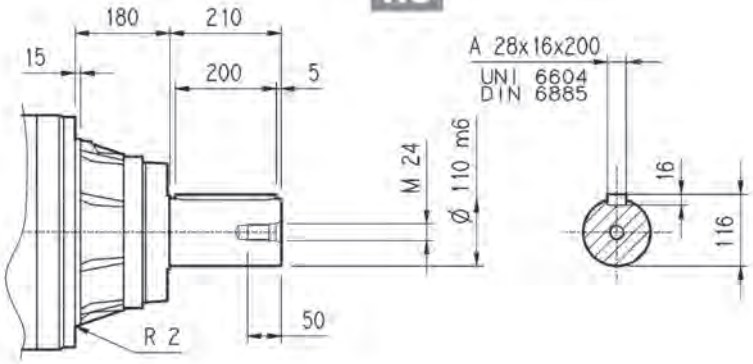

PC

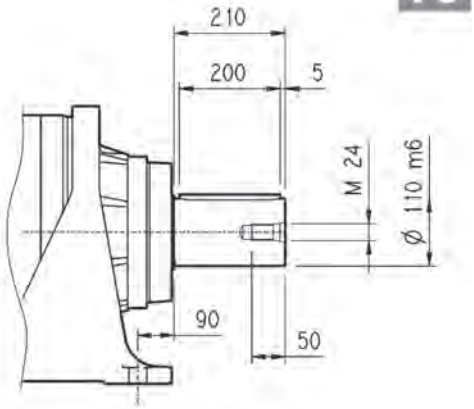

HZ

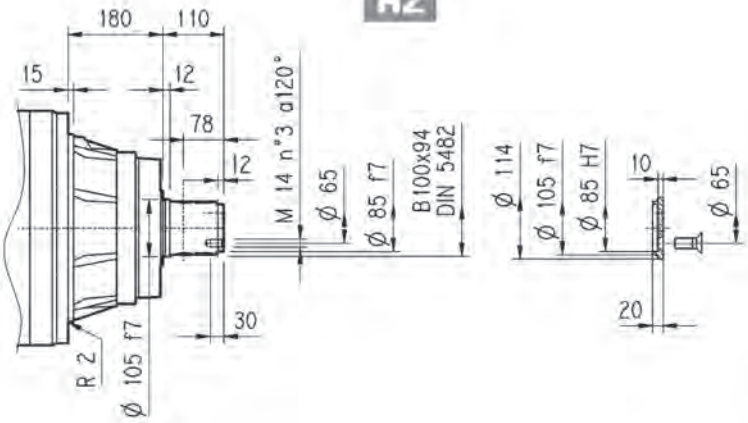

FZ

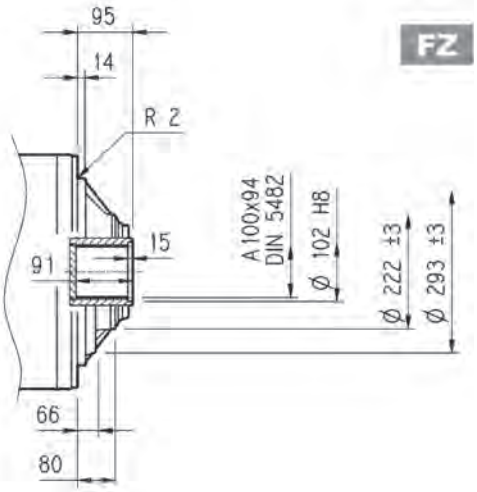

FP

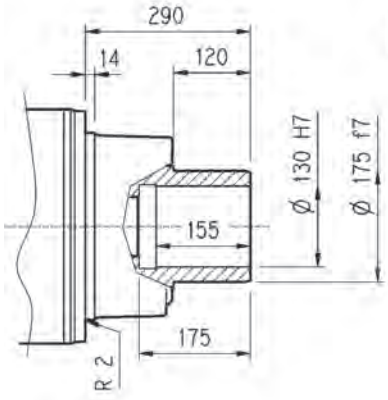

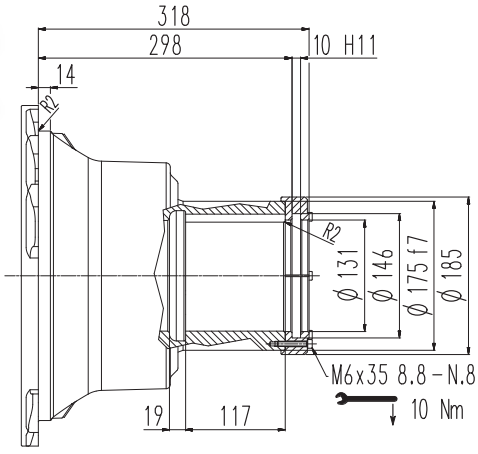

FDK

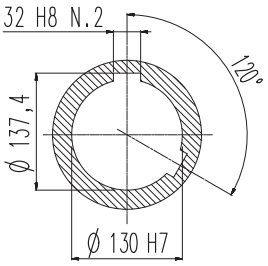

FP	M_{2max} = 44000 Nm

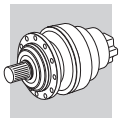

310 L | 310 R | 3/V 10 L

Flange

W0A

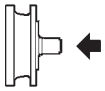

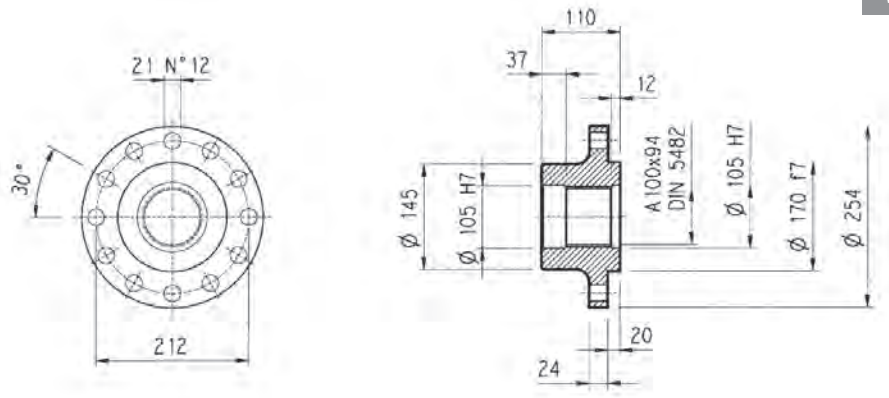

Material: Steel C40

Pinions

P...

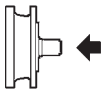

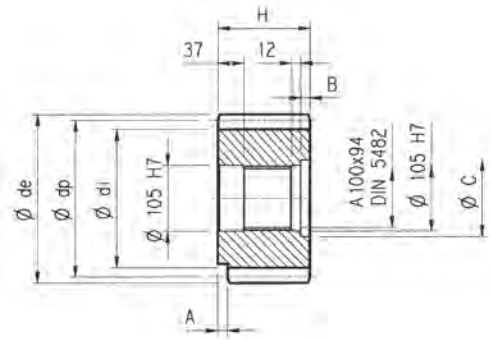

α = 20°

	m	z	x	dp	di	de	H	A	B	C	Material
PLQ	12	23	—	276	246	300	110	—	—	—	Steel 18NiCrMo5 case hardened
PPD	16	13	0.500	208	184	252.5	145	—	35	116	Steel 39NiCrMo3 hardened and tempered
PPF	16	15	0.450	240	215	280	125	—	15	120	

Sleeve coupling

M0A

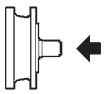

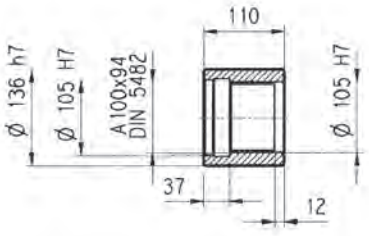

Material: Steel 16CrNi4

Splined bars

B0A

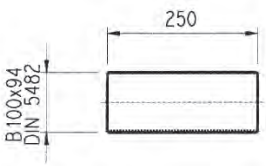

Material: Case hardening steel 18NiCrMo5 UNI 5331
must be case hardened 50-55 HRC

Shrink disc

G0A

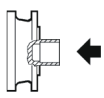

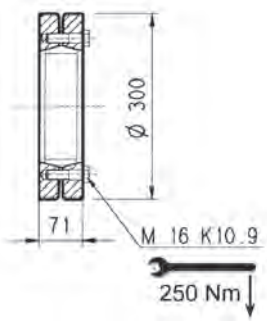

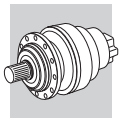

310 L 310 R

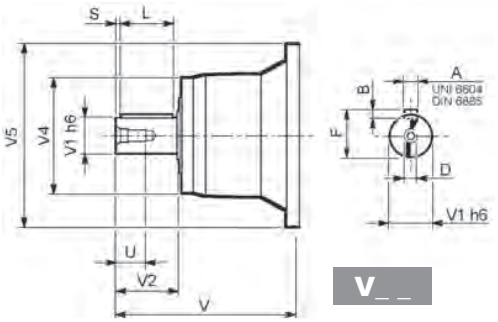

V_ _

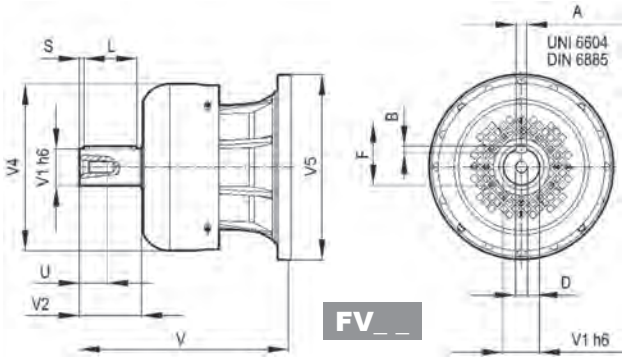

FV_ _

		V	V1	V2	V4	V5	A	B	F	L	S	D	U
310 L1	**V10B**	377	80	130	200	400	22	14	85	110	10	M16	36
	FV10B	457	80	130	347.5	400	22	14	85	110	10	M16	36
310 L2	**V06B**	307	60	105	155	292	18	11	64	90	7.5	M16	36
	FV06B	357	60	105	309	292	18	11	64	90	7.5	M16	36
310 L3	**V05B**	239	48	82	155	245	14	9	51.5	70	6	M16	36
	FV05B	276	48	82	219.5	244	14	9	51.5	70	6	M16	36
310 L4	**V01A**	137.5	24	36	120	186	8	7	27	30	3	M8	19
	V01B	158	38	58	120	186	10	8	41	50	4	M12	28
310 R2 (B) (C)	**V06B**	307	60	105	155	292	18	11	64	90	7.5	M16	36
	FV06B	357	60	105	309	292	18	11	64	90	7.5	M16	36
310 R3-R4	**V01A**	137.5	24	36	120	186	8	7	27	30	3	M8	19
	V01B	158	38	58	120	186	10	8	41	50	4	M12	28

310 L 310 R

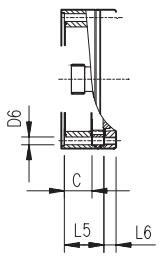

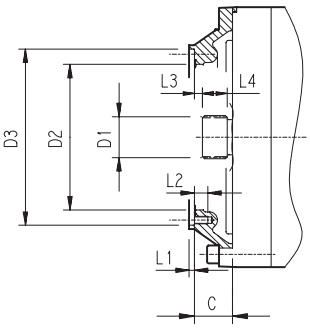

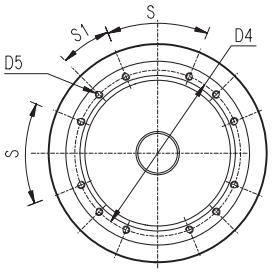

		C	D1	D2	D3	D4	D5	D6	L1	L2	L3	L4	L5	L6	S	S1	Input
310 L1	**V9AC**	88	70x64 DIN 5482	200	282 H7	266	M12 n°12	—	4	22	11	32	—	—	45°	45°	C
310 L2	**V9AB**	45	58x53 DIN 5482	195	236 H7	222	M10 n°12	—	4	18	11	22	—	—	45°	22.5°	B
310 L3	**V9AA**	37	40x36 DIN 5482	140	178 H7	165	M10 n°8	—	4	18	9	18	—	—	45°	45°	A
310 L4	**V9AA**	37	40x36 DIN 5482	140	178 H7	165	M10 n°8	11	4	—	9	18	53	18	45°	45°	A
310 R2 (B) (C)	**V9AA**	45	58x53 DIN 5482	195	236 H7	222	M10 n°12	—	4	18	11	22	—	—	45°	22.5°	B
310 R3-R4	**V9AA**	37	40x36 DIN 5482	140	178 H7	165	M10 n°8	11	4	—	9	18	37	18	45°	45°	A

3/V 10 L

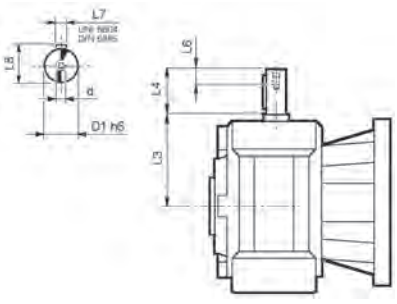

	D1 h6	L3	L4	L6	L7	L8	d
3/V 10 L3_HS	35	185	65	20	10	38	M8
3/V 10 L4_HS	25	144	50	19	8	28	M8

Permissible radial and axial loads on output shaft with $Fh_2 : n_2 \cdot h = 100000$

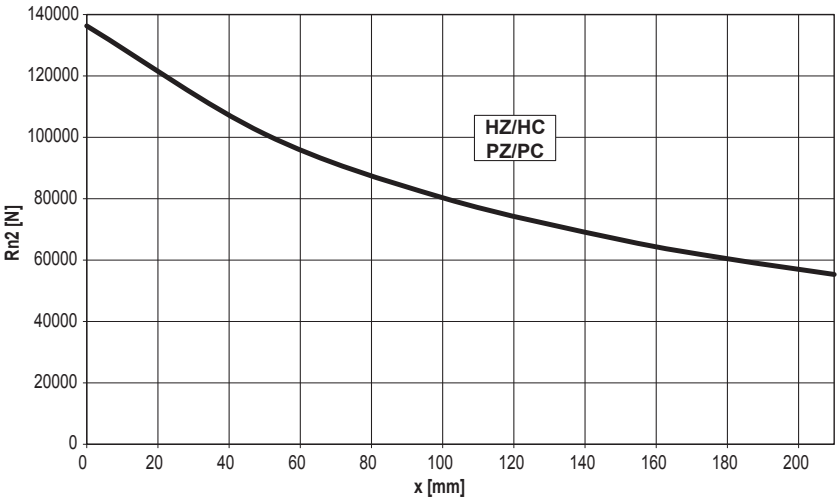

	An2 (+)	An2 (-)
HZ - HC PZ - PC	85000	50000

	Rn2	An2 (+/-)
FZ	30170	24136

Load corrective factor fh_2 on shafts	$Fh_2 = n_2 \cdot h$		10000	25000	50000	100000	500000	1000000
	fh_2	FZ	**2.15**	**1.59**	**1.26**	**1.00**	**0.58**	**0.46**
		HZ - HC - PZ - PC	**1.27**	**1.27**	**1.23**	**1.00**	**0.62**	**0.50**

Permissible radial loads on input shaft with $Fh_1 : n_1 \cdot h = 250000$

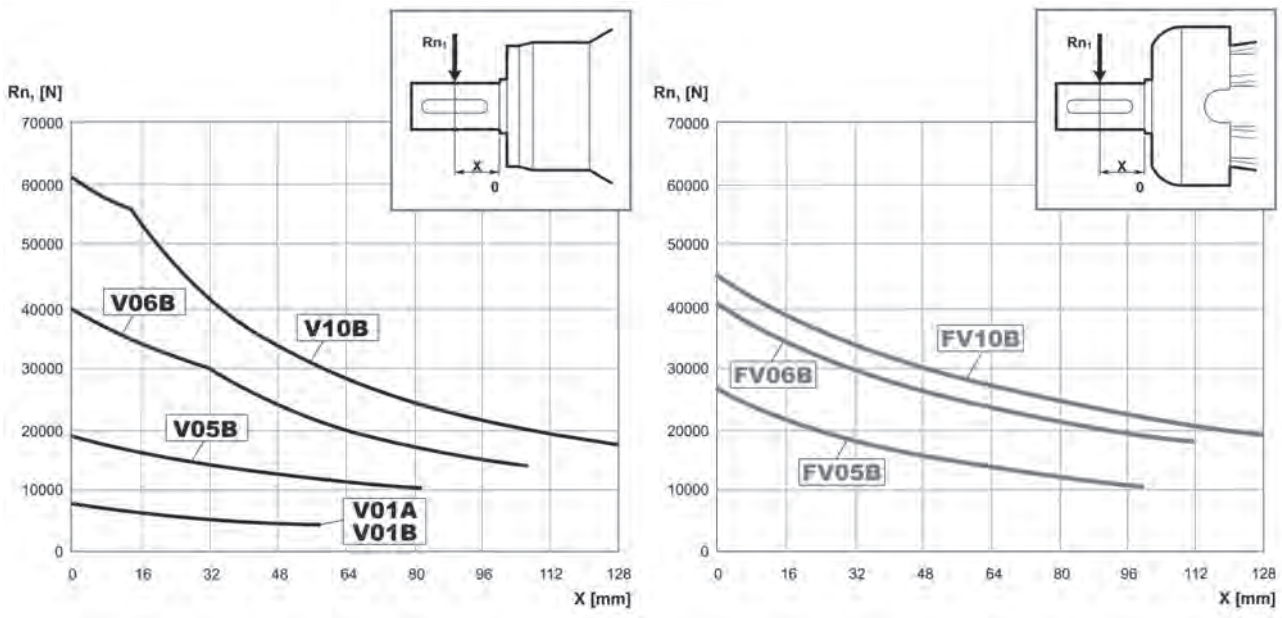

Load corrective factor fh_1 on shafts	$Fh_1 = n_1 \cdot h$	250000	500000	1000000	2000000	5000000	10000000
	fh_1	**1**	**0.79**	**0.63**	**0.50**	**0.37**	**0.29**

310 VK

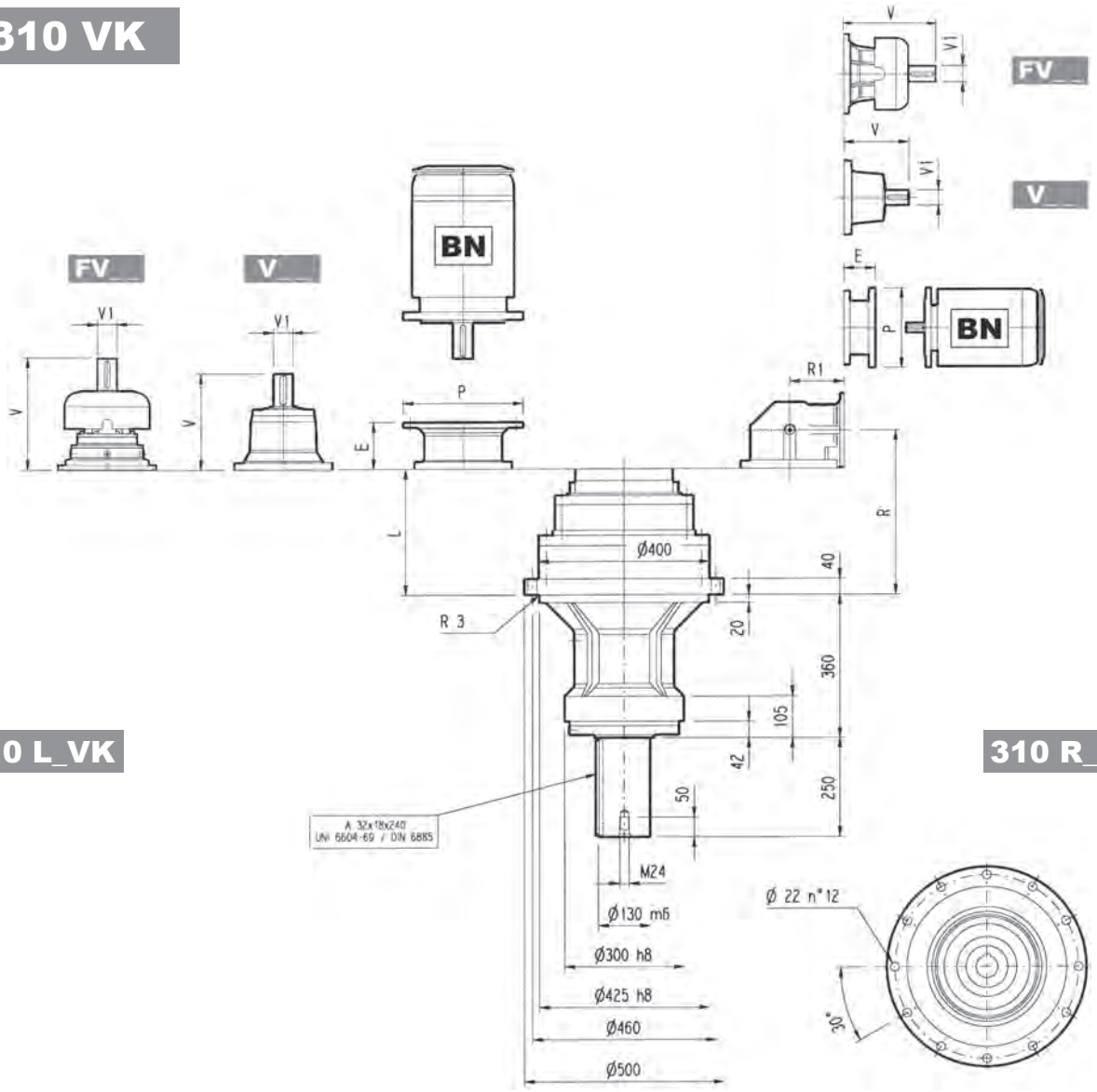

310 L_VK

310 R_VK

	L	Kg	V	V1	Kg	V	V1	Kg	V	V1	Kg	V	V1	Kg
310 L1	107	200	377	80	50	—	—	—	457	80	63	—	—	—
310 L2	243	230	307	60	23	—	—	—	357	60	28	—	—	—
310 L3	308	240	239	48	15	—	—	—	276	48	17	—	—	—
310 L4	361	245	137.5	24	6	158	38	7	—	—	—	—	—	—

	P71		P80		P90		P100		P112		P132		P160		P180		P200		P225		P250	
	E	P	E	P	E	P	E	P	E	P	E	P	E	P	E	P	E	P	E	P	E	P
310 L1	—	—	—	—	—	—	—	—	—	—	—	—	—	—	—	—	271	400	301	450	281	550
310 L2	—	—	—	—	—	—	—	—	—	—	—	—	152	350	153	350	183	400	212	450	193	550
310 L3	—	—	—	—	—	—	—	—	—	—	114	300	144	350	144	350	174	400	—	—	—	—
310 L4	65	160	84	200	84	200	94	250	94	250	114	300	144	350	—	—	—	—	—	—	—	—

	R	R1	Kg	V	V1	Kg	V	V1	Kg	V	V1	Kg	V	V1	Kg
310 R2 (B)	315	345	320	307	60	23	—	—	—	357	60	28	—	—	—
310 R2 (C)	333	390	340	307	60	23	—	—	—	357	60	28	—	—	—
310 R3	380	140	250	137.5	24	6	158	38	7	—	—	—	—	—	—
310 R4	400	140	260	137.5	24	6	158	38	7	—	—	—	—	—	—

	P71		P80		P90		P100		P112		P132		P160		P180		P200		P225	
	E	P	E	P	E	P	E	P	E	P	E	P	E	P	E	P	E	P	E	P
310 R2 (B)	—	—	—	—	—	—	—	—	—	—	—	—	—	—	152	350	182	400	212	450
310 R2 (C)	—	—	—	—	—	—	—	—	—	—	114	300	152	350	152	350	182	400	212	450
310 R3	65	160	84	200	84	200	94	250	94	250	114	300	144	350	—	—	—	—	—	—
310 R4	65	160	84	200	84	200	94	250	94	250	114	300	144	350	—	—	—	—	—	—

310 VK

The diagram below allows the calculation of permitted overhung load R_{x2} on the output shaft of gearbox, with radial force applying at a distance x from shaft shoulder.
The curves are relevant to value resulting from the relationship of trust load A_{n2} to radial load R_{n2}, based on n_2 = 10 min^{-1} and 10000 hrs theoretical lifetime.

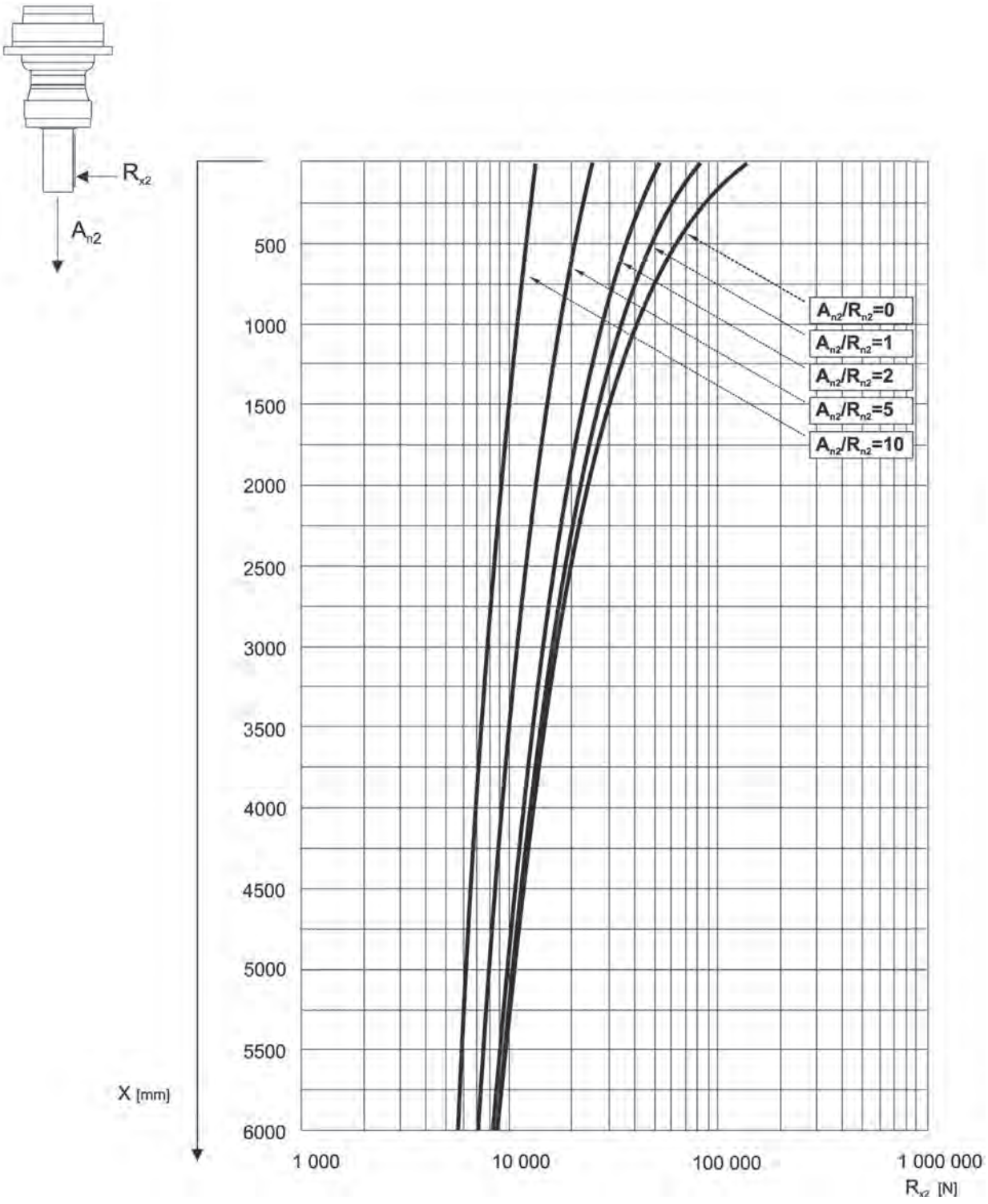

311 L

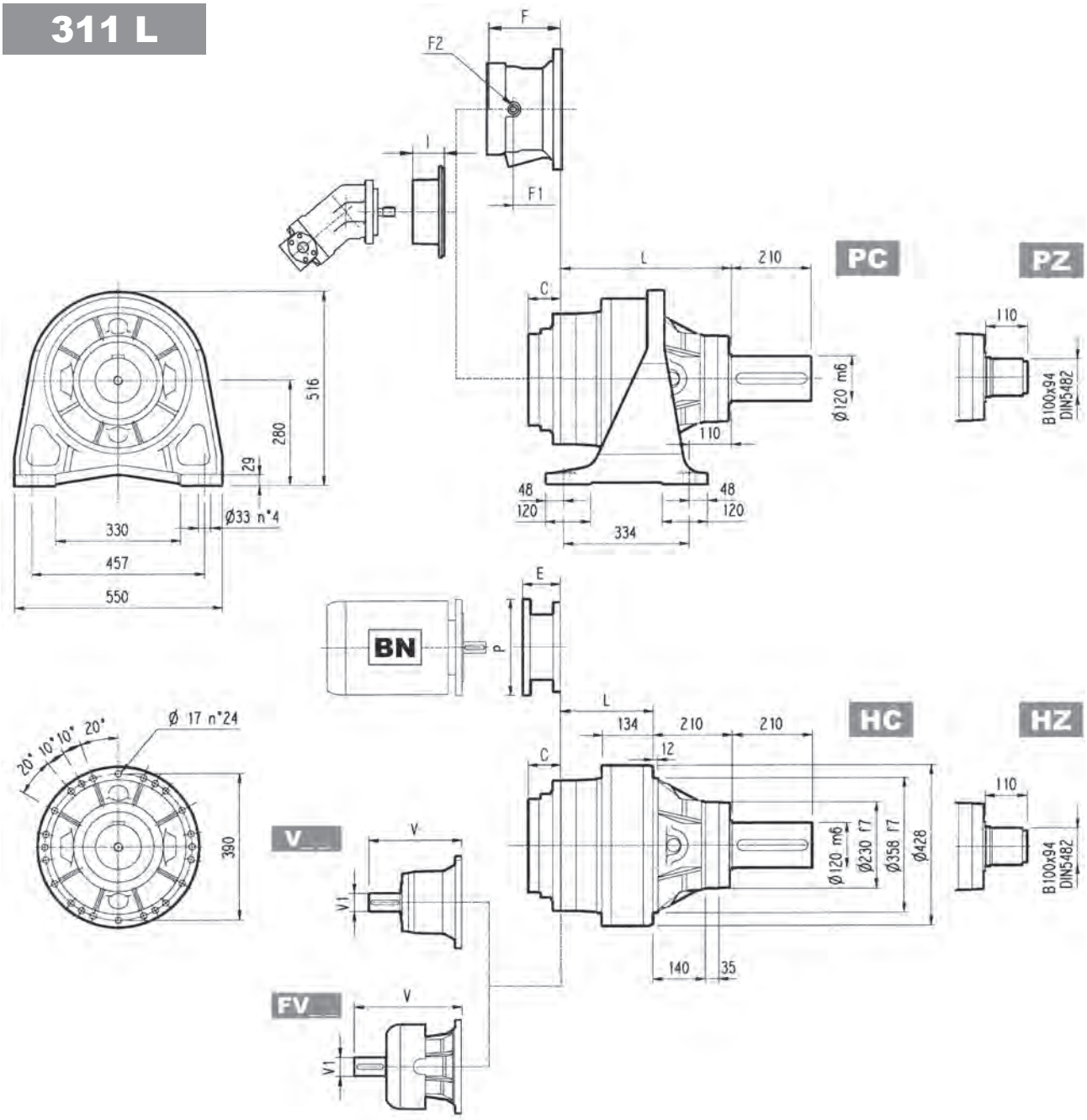

	L				Kg			
	PC - PZ	HC - HZ	FZ - FZP	FP	PC - PZ	HC - HZ	FZ - FZP	FP
311 L1	325	115	115	115	250	180	160	170
311 L2	458	248	248	248	295	225	205	215
311 L3	547	337	337	337	307	237	217	227
311 L4	612	402	402	402	314	244	224	234

	V	V1	Kg	V	V1	Kg	V	V1	Kg	V	V1	Kg	C	Input	I	F	F1	F2	Type	Input	Kg
311 L1	348	80	55	—	—	—	456	80	85	—	—	—	81	D		—	—	—	—	—	—
311 L2	315	80	35	313	60	28	375	80	48	363	60	34	51	B		201	153	1/4 G	6	B	28
311 L3	239	48	15	—	—	—	276	48	17	—	—	—	37	A		145	95	1/4 G	5	A	16
311 L4	137.5	24	6	158	38	7	—	—	—	—	—	—	37	A	457	105	65	1/4 G	4	A	10

311 L

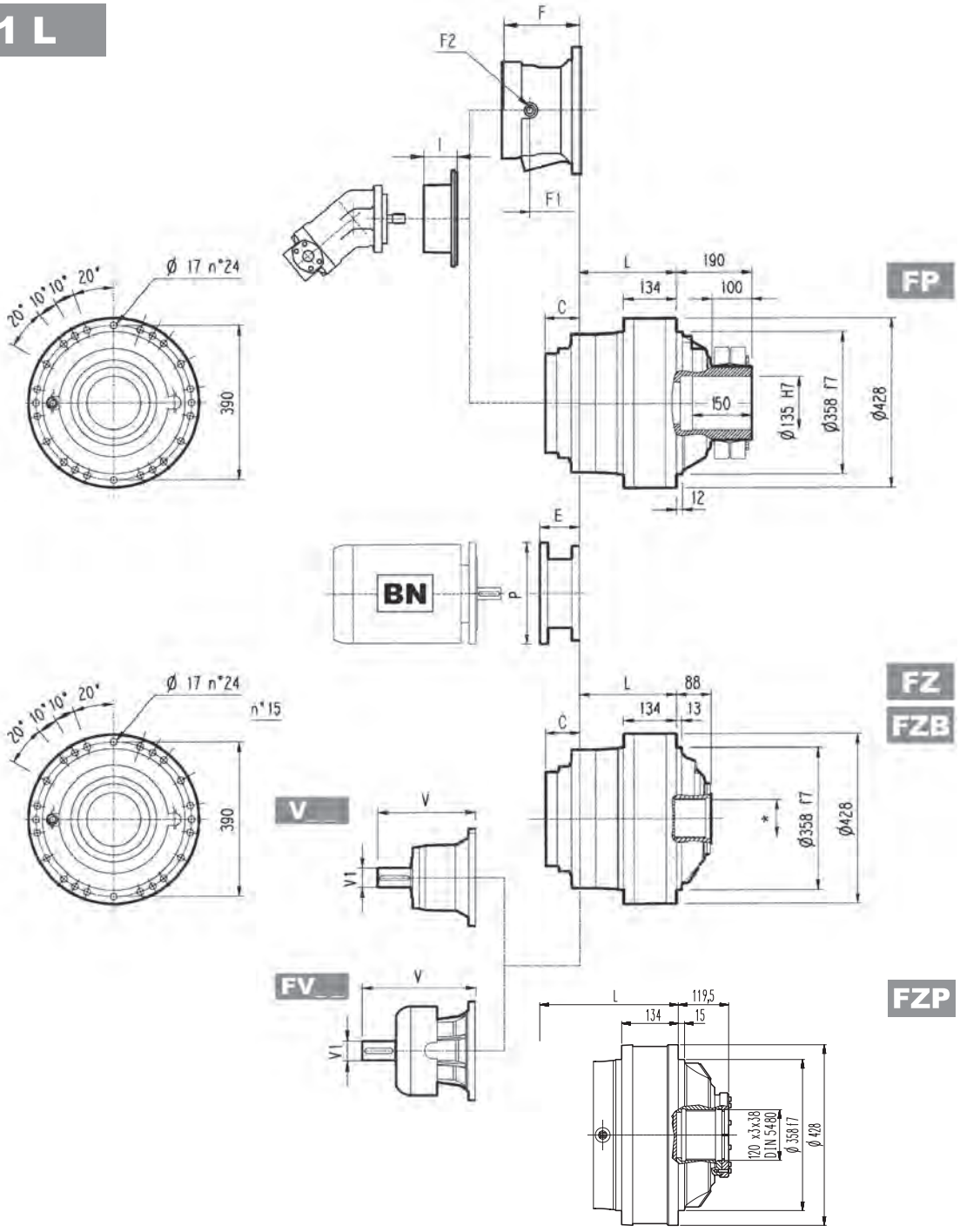

FZB	M_{2max} = 66900 Nm

FP	M_{2max} = 55000 Nm

* For dimensions refer to page 354

	P71		P80		P90		P100		P112		P132		P160		P180		P200		P225		P250	
	E	P	E	P	E	P	E	P	E	P	E	P	E	P	E	P	E	P	E	P	E	P
311 L1	—	—	—	—	—	—	—	—	—	—	—	—	—	—	—	—	267	400	297	450	297	550
311 L2	—	—	—	—	—	—	—	—	—	—	—	—	—	—	195	350	186	400	216	450	216	550
311 L3	—	—	—	—	—	—	—	—	—	—	114	300	144	350	144	350	174	400	—	—	—	—
311 L4	65	160	84	200	84	200	94	250	94	250	114	300	144	350	—	—	—	—	—	—	—	—

311 R

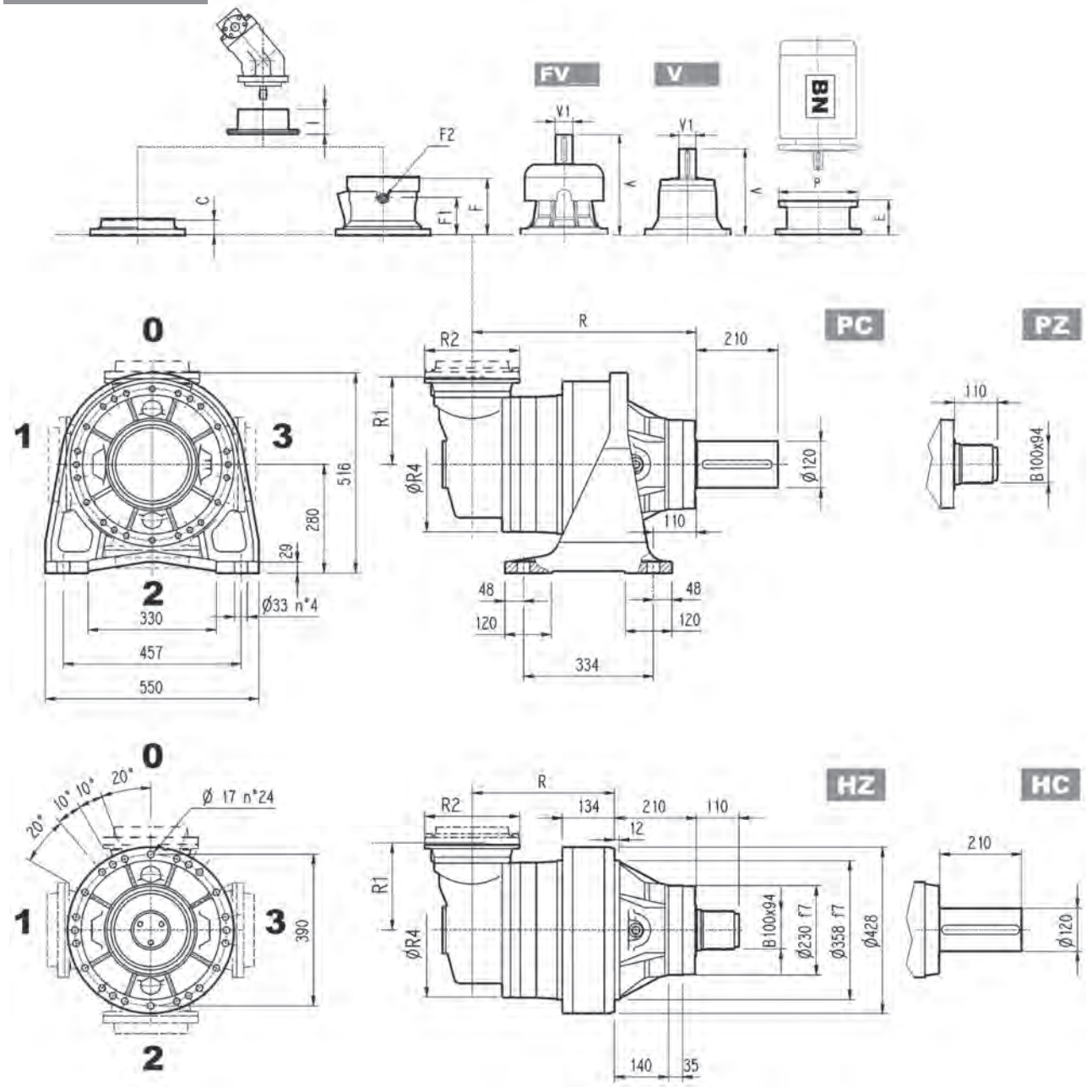

	R				R1	R2	R4	Kg			
	PC-PZ	HC-HZ	FZ - FZP	FP				PC-PZ	HC-HZ	FZ - FZP	FP
311 R2 (B)	550	340	340	340	345	292	400	380	310	290	300
311 R2 (C)	550	340	340	340	390	292	480	390	320	300	310
311 R3	577	367	367	367	225	245	375	345	275	255	265
311 R4	639	429	429	429	140	186	244	327	257	237	247

	V	V1	Kg	V	V1	Kg	V	V1	Kg	V	V1	Kg	C	Input	I	F	F1	F2	Type	Input	Kg
311 R2 (B)	307	60	23	—	—	—	357	60	28	—	—	—	45	B		195	147	1/4 G	6	B	28
311 R2 (C)	307	60	23	—	—	—	357	60	28	—	—	—	45	B		195	147	1/4 G	6	B	28
311 R3	239	48	15	—	—	—	276	48	17	—	—	—	37	A	457	145	95	1/4 G	5	A	16
311 R4	137.5	24	6	158	38	7	—	—	—	—	—	—	37	A		105	65	1/4 G	4	A	10

311 R

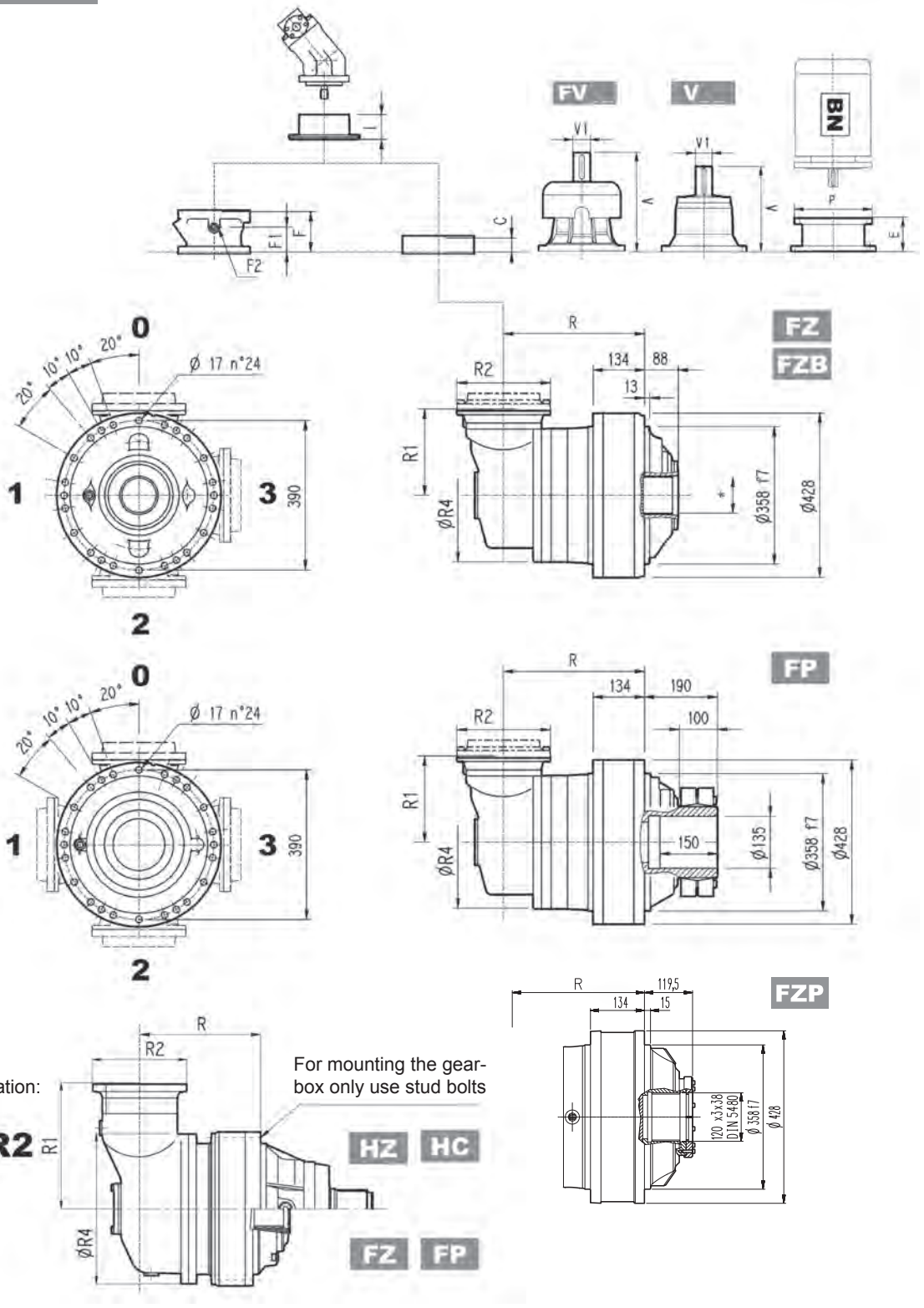

FZB	M_{2max} = 66900 Nm	
FP	M_{2max} = 55000 Nm	

* For dimensions refer to page 354

	P71		P80		P90		P100		P112		P132		P160		P180		P200		P225		P250	
	E	P	E	P	E	P	E	P	E	P	E	P	E	P	E	P	E	P	E	P	E	P
311 R2 (B)	—	—	—	—	—	—	—	—	—	—	—	—	—	—	152	350	182	400	212	450	193	550
311 R2 (C)	—	—	—	—	—	—	—	—	—	—	—	—	—	—	152	350	182	400	212	450	193	550
311 R3	—	—	—	—	—	—	—	—	—	—	114	300	144	350	144	350	174	400	—	—	—	—
311 R4	65	160	84	200	84	200	94	250	94	250	114	300	144	350	—	—	—	—	—	—	—	—

3/V 11 L3

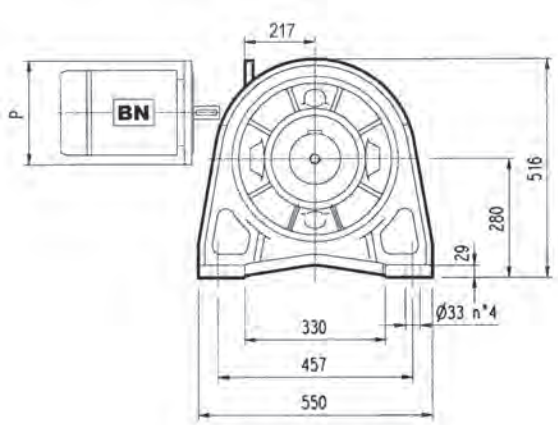

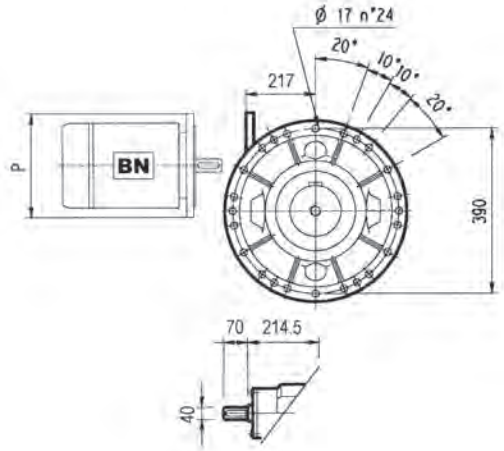

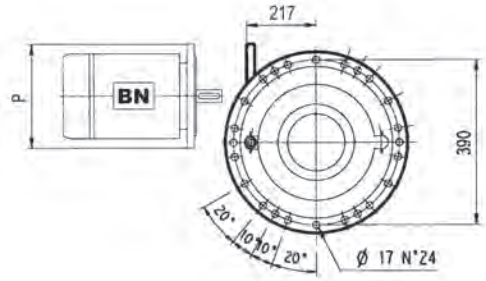

PC

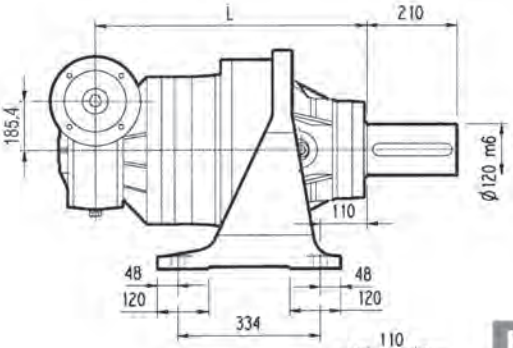

HZ PZ

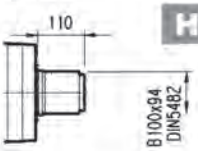

HC

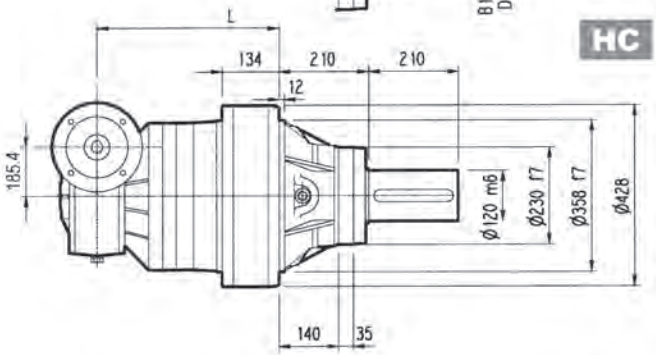

FP

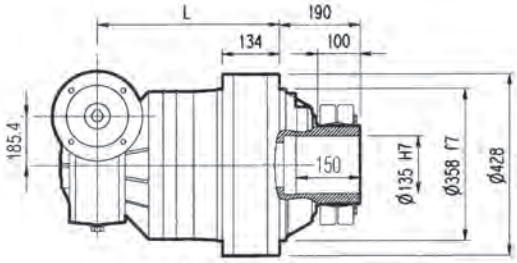

FZ
FZB

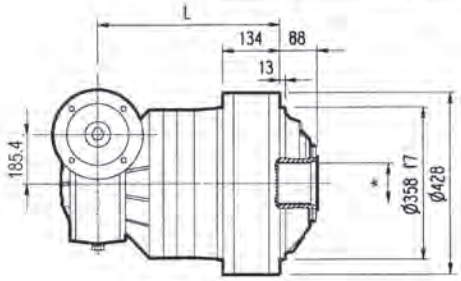

FZP

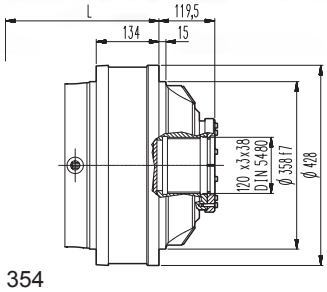

FZB	**M_{2max} = 66900 Nm**
FP	**M_{2max} = 55000 Nm**

* For dimensions refer to page 354

	L				Kg				P80	P90	P100	P112	P132	P160	P180
	PC - PZ	HC - HZ	FZ	FP	PC - PZ	HC - HZ	FZ	FP	P	P	P	P	P	P	P
3/V 11 L3	659	449	449	449	390	320	300	310	—	—	250	250	300	350	350

3/V 11 L4

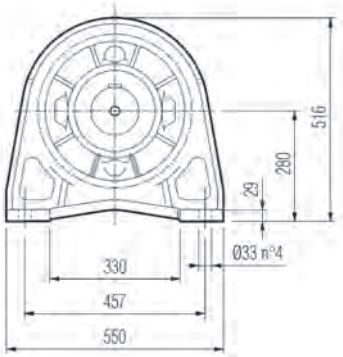

PC

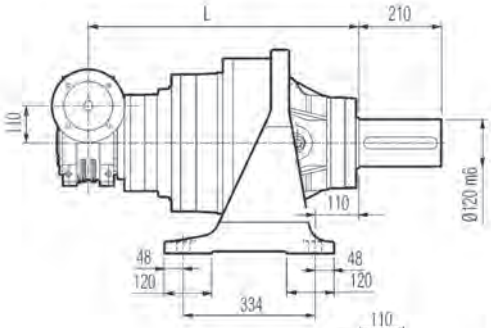

HZ PZ

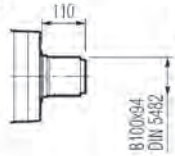

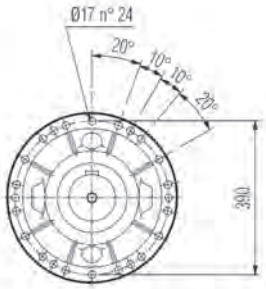

HC

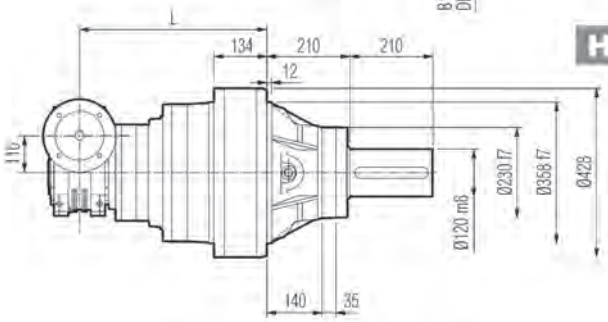

FP

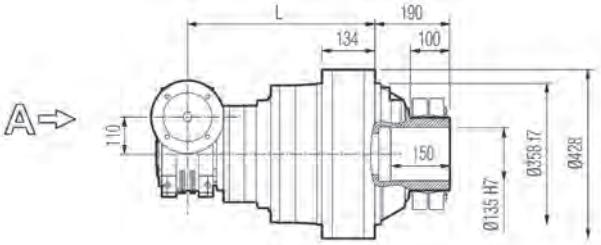

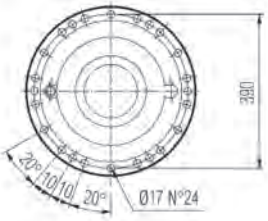

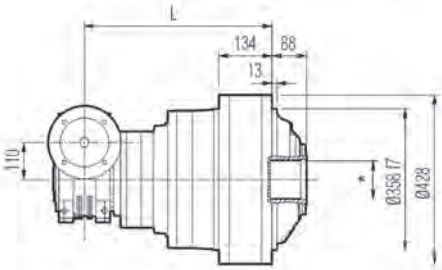

FZ
FZB

FZP

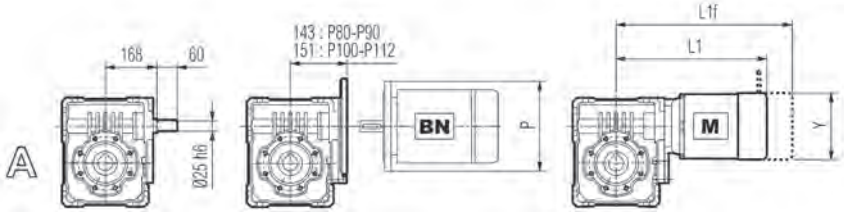

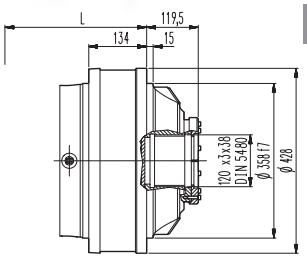

FZB M_{2max} = 66900 Nm

FP M_{2max} = 55000 Nm

* For dimensions refer to page 354

	L				Kg			
	PC - PZ	HC - HZ	FZ - FZP	FP	PC - PZ	HC - HZ	FZ - FZP	FP
3/V 11 L4	707	497	497	497	340	270	250	260

	P80	P90	P100	P112	S2 + M2S			S3 + M3S			S3 + M3L		
	P	P	P	P	L1	L1f	Y	L1	L1f	Y	L1	L1f	Y
3/V 11 L4	200	200	250	250	364	440	156	407	503	193	439	530	193

311 L | 311 R | 3/V 11 L

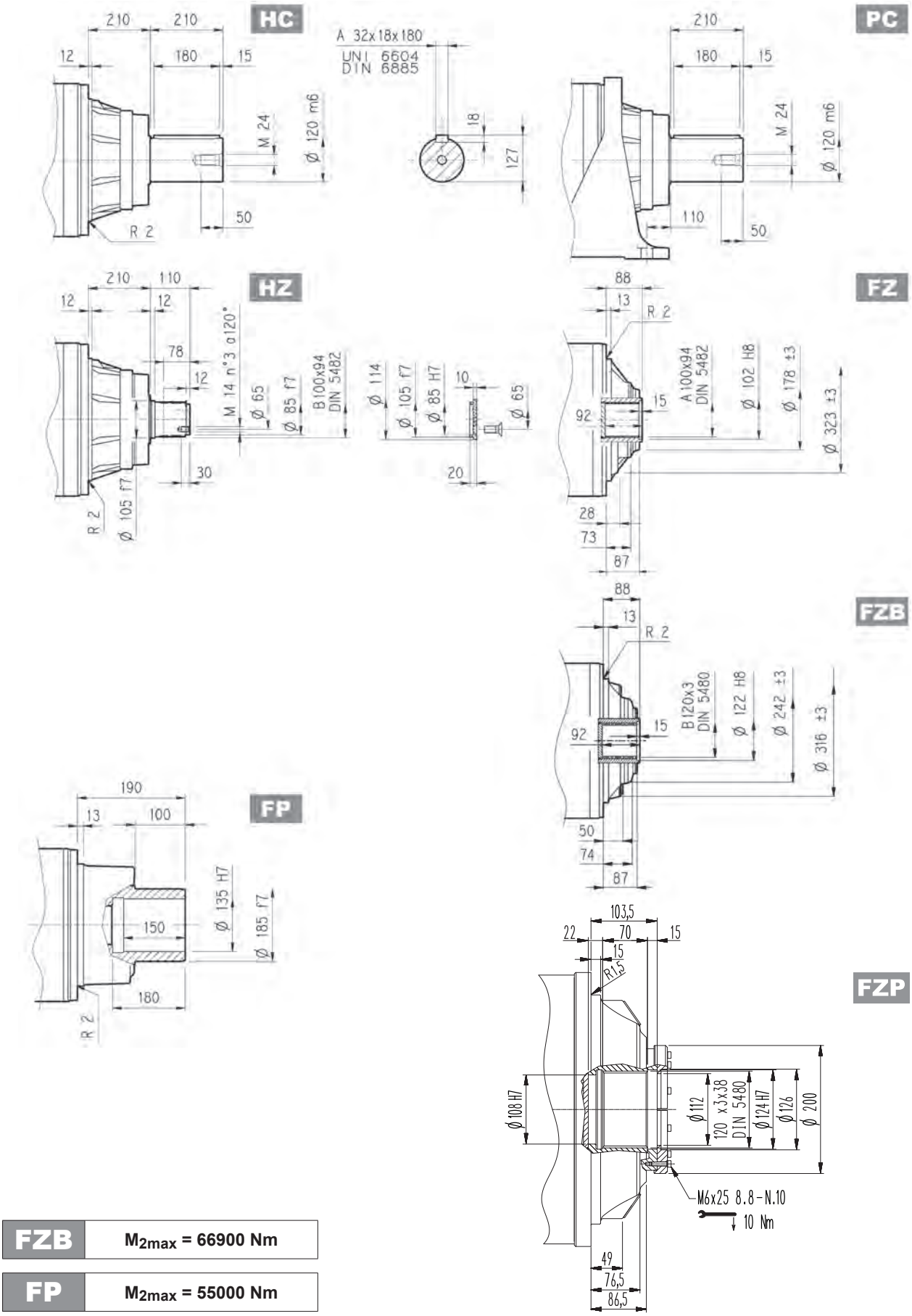

FZB	M_{2max} = 66900 Nm
FP	M_{2max} = 55000 Nm

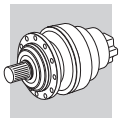

311 L | 311 R | 3/V 11 L

Flange

W0A

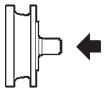

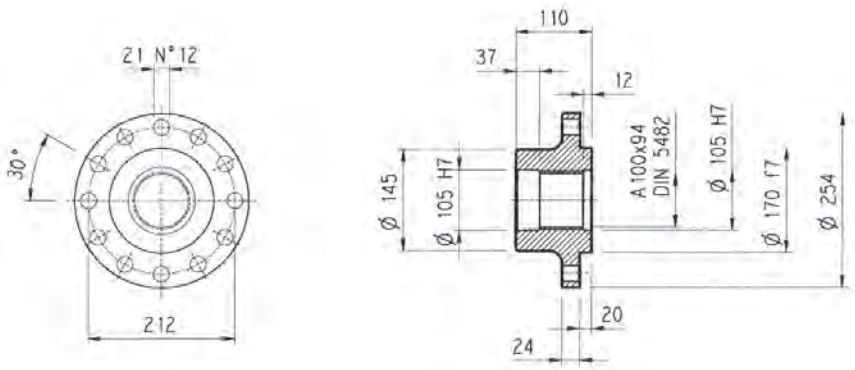

Material: Steel C40

Pinions

P...

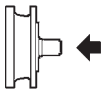

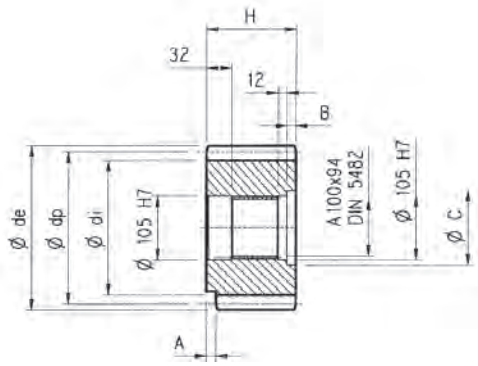

α = 20°

	m	z	x	dp	di	de	H	A	B	C	Material
PLQ	12	23	—	276	246	300	110	—	—	—	Steel 18NiCrMo5 case hardened
PPD	16	13	0.500	208	184	252.5	145	—	35	116	Steel 39NiCrMo3 hardened and tempered
PPF	16	15	0.450	240	215	280	125	—	15	120	

Sleeve coupling

M0A

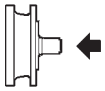

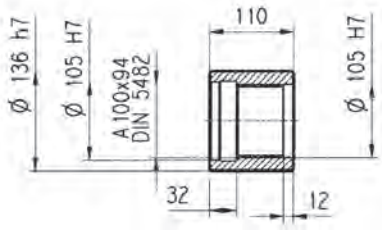

Material: Steel 16CrNi4

Splined bars

B0A

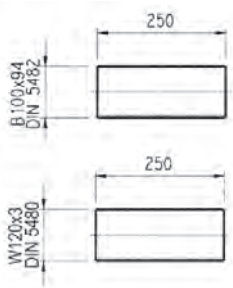

FZ

FZB

Material: Case hardening steel 18NiCrMo5 UNI 5331
must be case hardened 50-55 HRC

Shrink disc

G0A

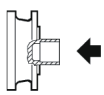

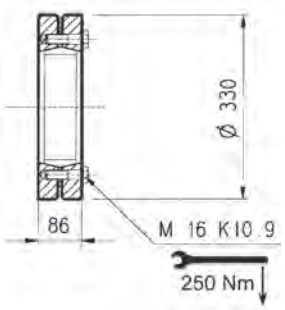

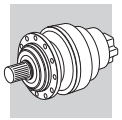

311 L 311 R

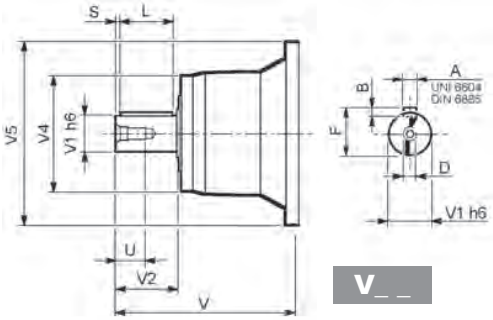

V_ _

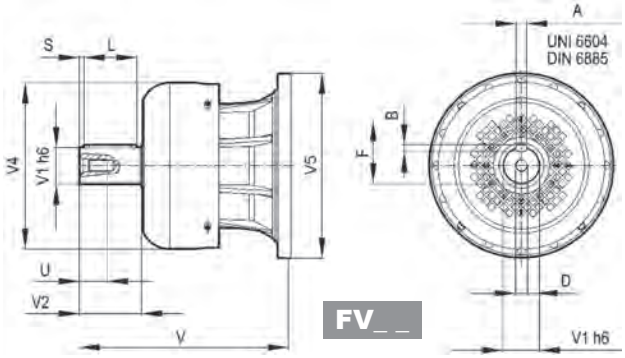

FV_ _

		V	V1	V2	V4	V5	A	B	F	L	S	D	U
311 L1	V11B	348	80	130	200	428	22	14	85	110	10	M16	36
	FV11B	456	80	130	347.5	428	22	14	85	110	10	M16	36
311 L2	V07B	315	80	130	200	345	22	14	85	110	10	M16	36
	FV07B	375	80	130	347.5	348	22	14	85	110	10	M16	36
	V07A	313	60	105	155	345	18	11	64	90	7.5	M16	36
	FV07A	363	60	105	309	348	18	11	64	90	7.5	M16	36
311 L3	V05B	239	48	82	155	245	14	9	51.5	70	6	M16	36
	FV05B	276	48	82	219.5	244	14	9	51.5	70	6	M16	36
311 L4	V01A	137.5	24	36	120	186	8	7	27	30	3	M8	19
	V01B	158	38	58	120	186	10	8	41	50	4	M12	28
311 R2 (B)(C)	V06B	307	60	105	155	292	18	11	64	90	7.5	M16	36
	FV06B	357	60	105	309	292	18	11	64	90	7.5	M16	36
311 R3	V05B	239	48	82	155	245	14	9	51.5	70	6	M16	36
	FV05B	276	48	82	219.5	244	14	9	51.5	70	6	M16	36
311 R4	V01A	137.5	24	36	120	186	8	7	27	30	3	M8	19
	V01B	158	38	58	120	186	10	8	41	50	4	M12	28

311 L 311 R

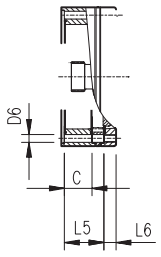

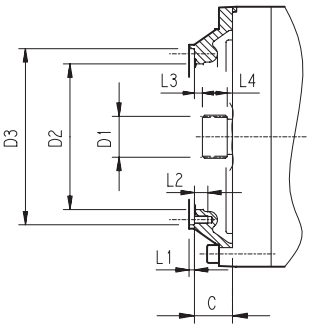

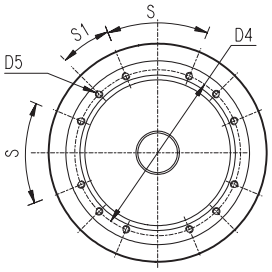

		C	D1	D2	D3	D4	D5	D6	L1	L2	L3	L4	L5	L6	S	S1	Input
311 L1	V9AD	81	80x74 DIN 5482	270	335 H7	314	M16 n°8	—	5	30	8.5	40	—	—	60°	30°	D
311 L2	V9AB	51	58x53 DIN 5482	195	236 H7	222	M10 n°12	—	4	18	11	22	—	—	45°	22.5°	B
311 L3	V9AA	37	40x36 DIN 5482	140	178 H7	165	M10 n°8	—	4	18	9	18	—	—	45°	45°	A
311 L4	V9AA	37	40x36 DIN 5482	140	178 H7	165	M10 n°8	11	4	—	9	18	65	18	45°	45°	A
311 R3	V9AA	37	40x36 DIN 5482	140	178 H7	165	M10 n°8	11	4	18	9	18	—	—	45°	45°	A
311 R2 (B) (C)	V9AB	45	58x53 DIN 5482	195	236 H7	222	M10 n°12	—	4	18	11	22	—	—	45°	22.5°	B
311 R4	V9AA	37	40x36 DIN 5482	140	178 H7	165	M10 n°8	11	4	—	9	18	37	18	45°	45°	A

3/V 11 L

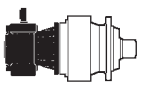

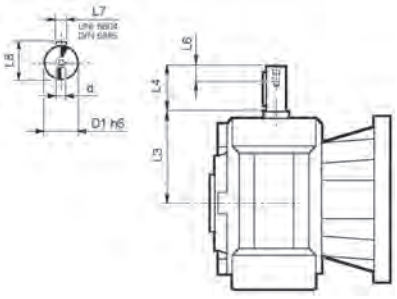

	D1 h6	L3	L4	L6	L7	L8	d
3/V 11 L3_HS	40	214.5	70	20	12	43	M8
3/V 11 L4_HS	25	168	60	19	8	28	M8

Bonfiglioli Riduttori

Permissible radial and axial loads on output shaft with $Fh_2 : n_2 \cdot h = 100000$

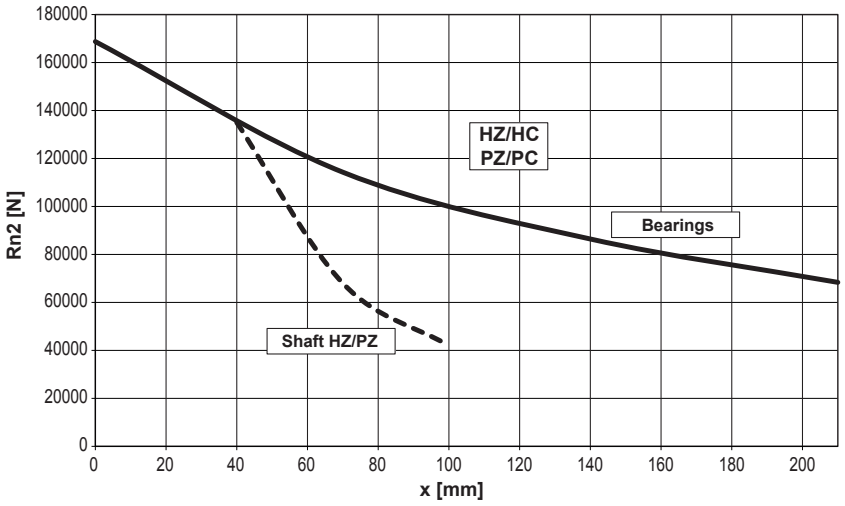

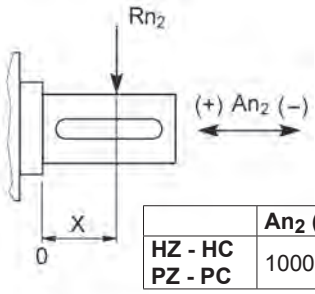

	An2 (+)	An2 (-)
HZ - HC PZ - PC	100000	70000

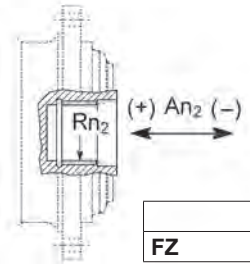

	Rn2	An2 (+/-)
FZ	30170	27850

	$Fh_2 = n_2 \cdot h$	10000	25000	50000	100000	500000	1000000
Load corrective factor fh_2 on shafts	FZ	**2.15**	**1.59**	**1.26**	**1.00**	**0.58**	**0.46**
	fh_2 HC - PC	**1.93**	**1.52**	**1.23**	**1.00**	**0.62**	**0.50**
	HZ - PZ	**1.24**	**1.00**	**1.00**	**1.00**	**0.62**	**0.50**

Permissible radial loads on input shaft with $Fh_1 : n_1 \cdot h = 250000$

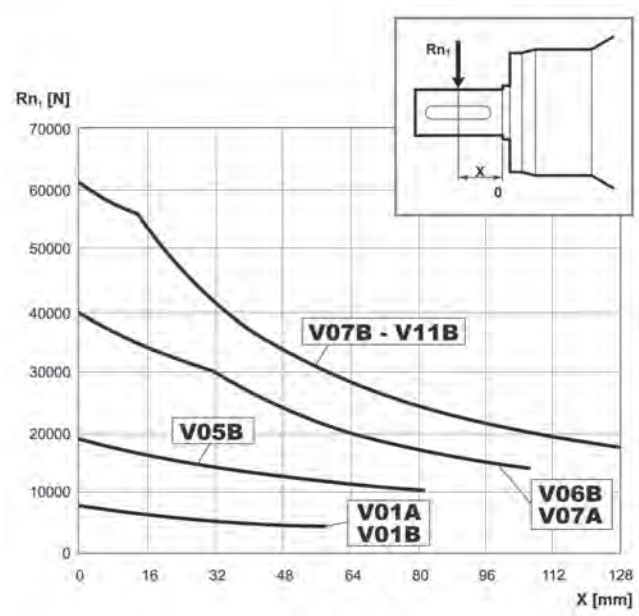

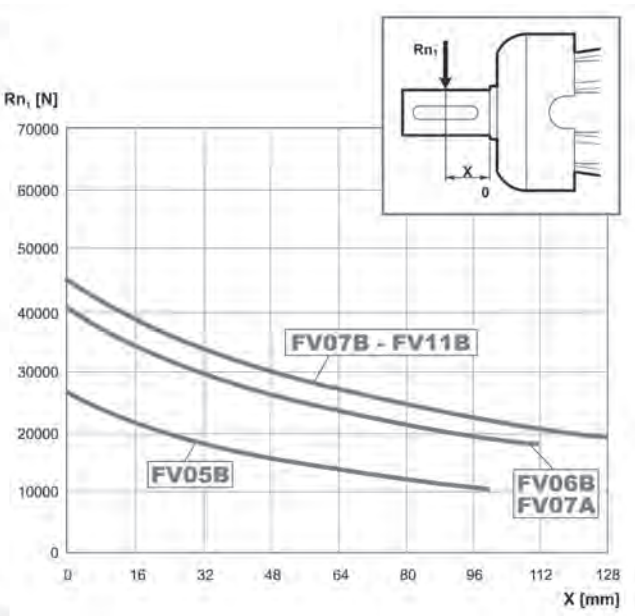

Load corrective factor fh_1 on shafts	$Fh_1 = n_1 \cdot h$	250000	500000	1000000	2000000	5000000	10000000
	fh_1	**1**	**0.79**	**0.63**	**0.50**	**0.37**	**0.29**

311 VK

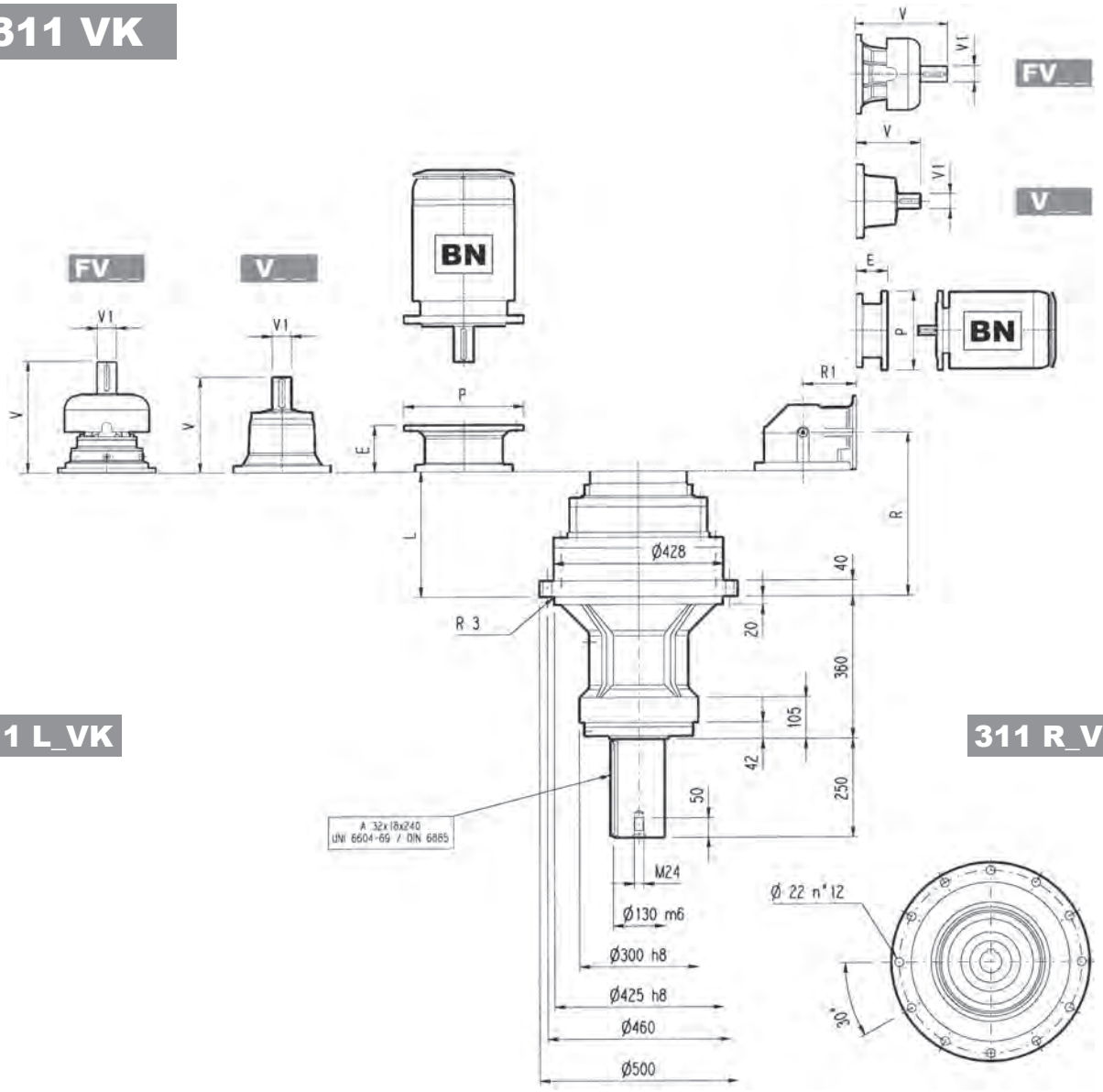

311 L_VK

311 R_VK

	L	Kg	V	V1	Kg	V	V1	Kg	V	V1	Kg	V	V1	Kg
311 L1	129	295	348	80	55	—	—	—	456	80	85	—	—	—
311 L2	262	340	315	80	35	313	60	28	375	80	48	363	60	34
311 L3	351	350	239	48	15	—	—	—	276	48	17	—	—	—
311 L4	416	360	137.5	24	6	158	38	7	—	—	—	—	—	—

	P71		P80		P90		P100		P112		P132		P160		P180		P200		P225		P250	
	E	P	E	P	E	P	E	P	E	P	E	P	E	P	E	P	E	P	E	P	E	P
311 L2	—	—	—	—	—	—	—	—	—	—	—	—	—	—	195	350	186	400	216	450	216	550
311 L3	—	—	—	—	—	—	—	—	—	—	114	300	144	350	144	350	174	400	—	—	—	—
311 L4	65	160	84	200	84	200	94	250	94	250	114	300	144	350	—	—	—	—	—	—	—	—

	R	R1	Kg	V	V1	Kg	V	V1	Kg	V	V1	Kg	V	V1	Kg
311 R2 (B)	354	345	420	307	60	23	—	—	—	357	60	28	—	—	—
311 R2 (C)	354	390	430	307	60	23	—	—	—	357	60	28	—	—	—
311 R3	381	225	385	239	48	15	—	—	—	276	48	17	—	—	—
311 R4	443	140	360	137.5	24	6	158	38	7	—	—	—	—	—	—

	P71		P80		P90		P100		P112		P132		P160		P180		P200		P225		P250	
	E	P	E	P	E	P	E	P	E	P	E	P	E	P	E	P	E	P	E	P	E	P
311 R2 (B)	—	—	—	—	—	—	—	—	—	—	—	—	—	—	152	350	182	400	212	450	193	550
311 R2 (C)	—	—	—	—	—	—	—	—	—	—	—	—	—	—	152	350	182	400	212	450	193	550
311 R3	—	—	—	—	—	—	—	—	—	—	114	300	144	350	144	350	174	400	—	—	—	—
311 R4	65	160	84	200	84	200	94	250	94	250	114	300	144	350	—	—	—	—	—	—	—	—

311 VK

The diagram below allows the calculation of permitted overhung load R_{x2} on the output shaft of gearbox, with radial force applying at a distance x from shaft shoulder.
The curves are relevant to value resulting from the relationship of trust load A_{n2} to radial load R_{n2}, based on n_2 = 10 min^{-1} and 10000 hrs theoretical lifetime.

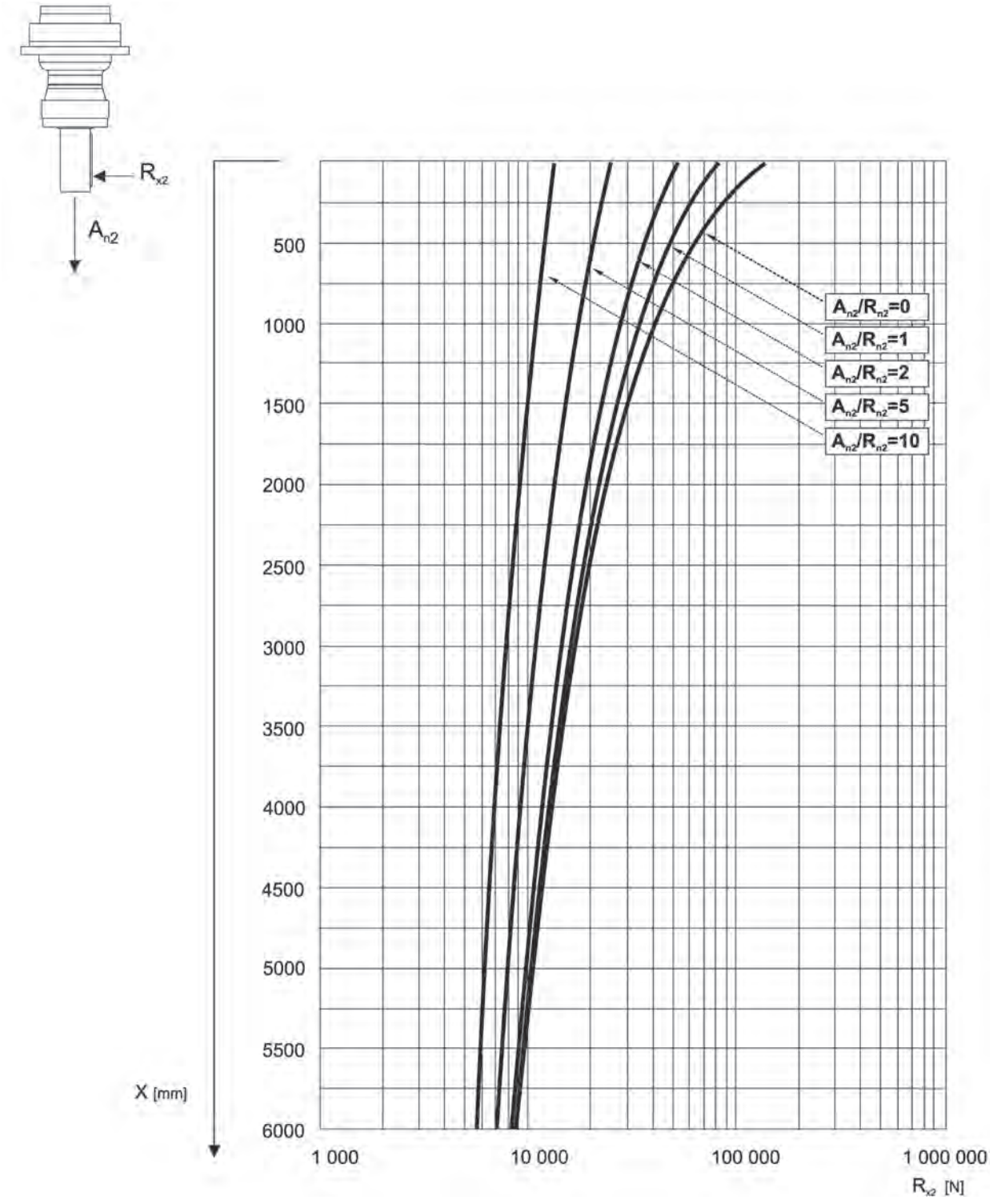

313 L

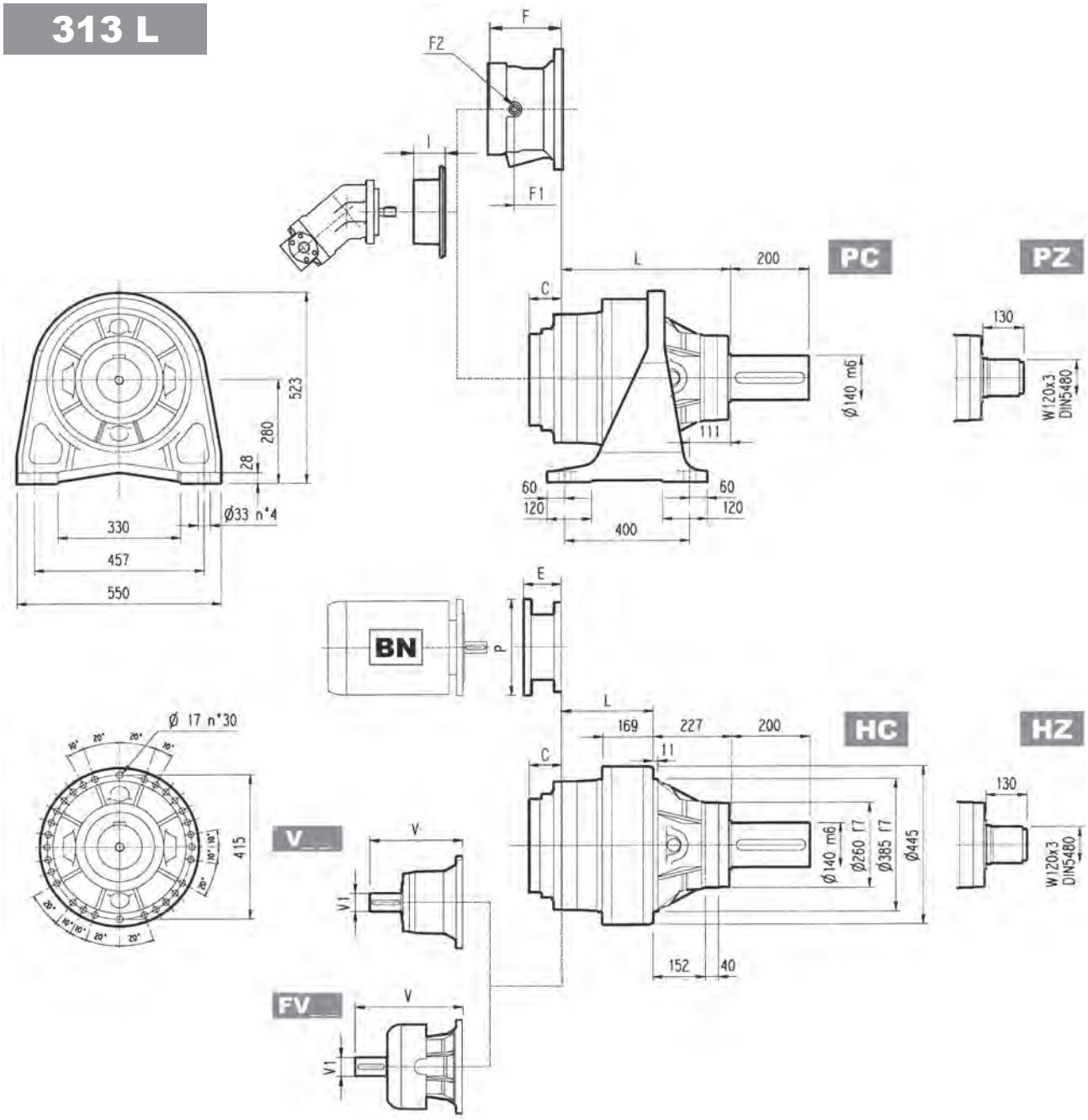

	L				Kg			
	PC - PZ	HC - HZ	FZ - FZP	FP	PC - PZ	HC - HZ	FZ - FZP	FP
313 L1	381	154	154	154	320	230	200	200
313 L2	531	304	304	304	380	290	260	280
313 L3	620	393	393	393	392	302	272	292
313 L4	685	458	458	458	399	309	279	299

	V	V1	Kg	V	V1	Kg	V	V1	Kg	V	V1	Kg	C	Input	I	F	F1	F2	Type	Input	Kg
313 L1	343	80	55	—	—	—	451	80	71	—	—	—	76	D		—	—	—	—	—	—
313 L2	315	80	35	313	60	28	375	80	48	363	60	34	51	B		201	153	1/4 G	6	B	28
313 L3	239	48	15	—	—	—	276	48	17	—	—	—	37	A		145	95	1/4 G	5	A	16
313 L4	137.5	24	6	158	38	7	—	—	—	—	—	—	37	A	457	105	65	1/4 G	4	A	10

313 L

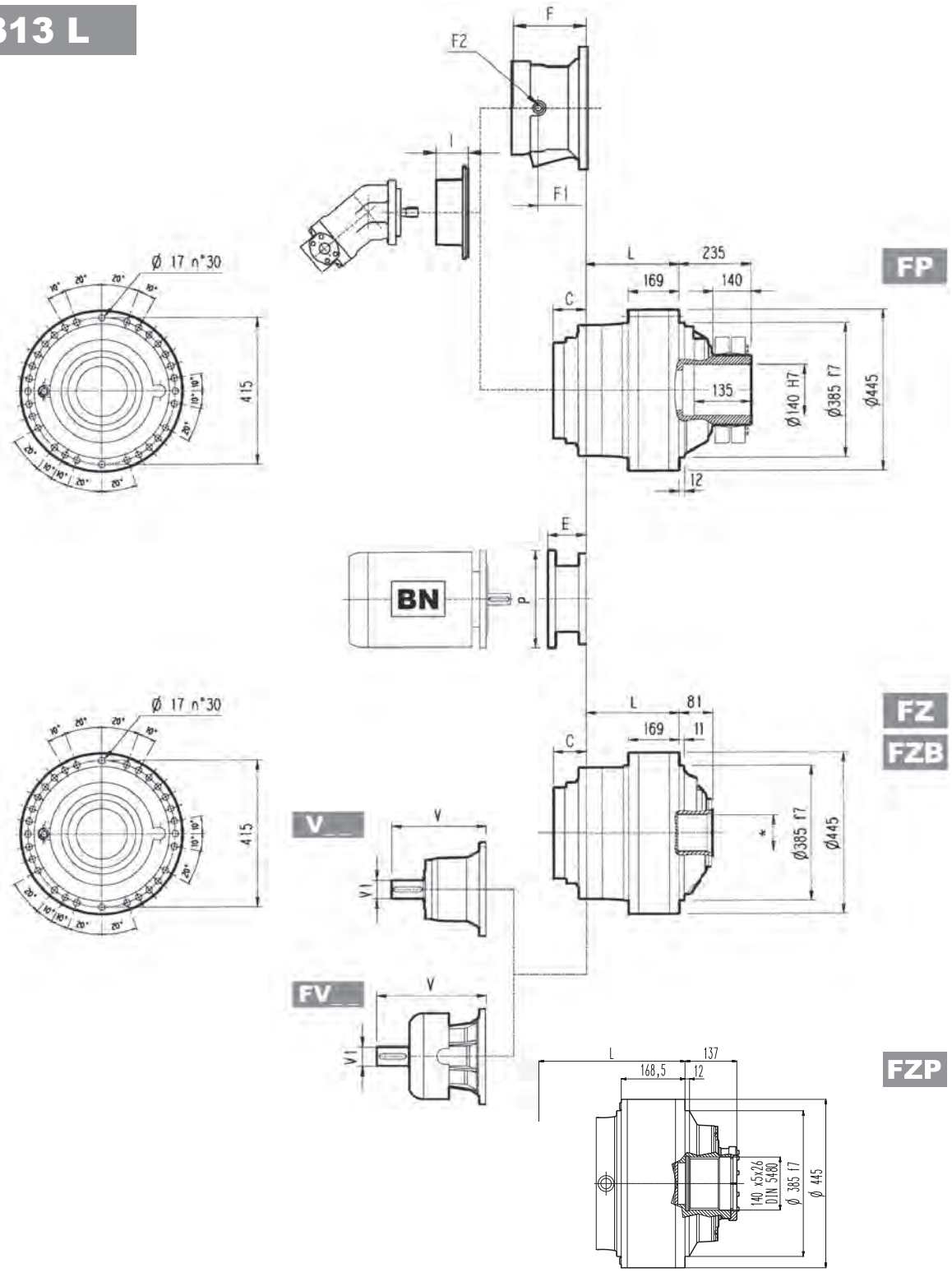

FP | **M_{2max} = 79000 Nm**

* For dimensions refer to page 366

	P71		P80		P90		P100		P112		P132		P160		P180		P200		P225		P250	
	E	P	E	P	E	P	E	P	E	P	E	P	E	P	E	P	E	P	E	P	E	P
313 L2	—	—	—	—	—	—	—	—	—	—	—	—	—	—	195	350	186	400	216	450	216	550
313 L3	—	—	—	—	—	—	—	—	—	—	114	300	144	350	144	350	174	400	—	—	—	—
313 L4	65	160	84	200	84	200	94	250	94	250	114	300	144	350	—	—	—	—	—	—	—	—

313 R

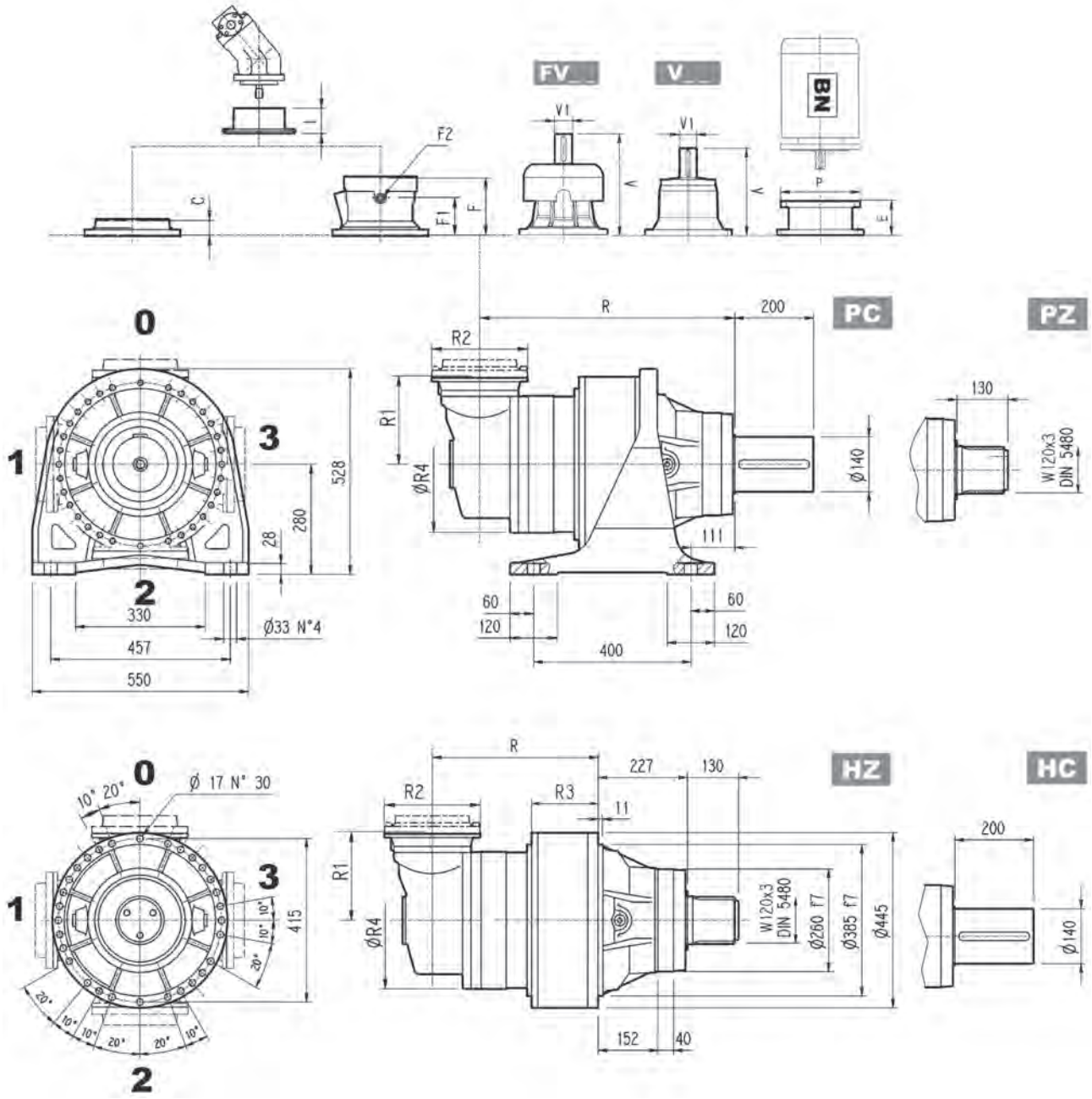

	R				R1	R2	R3			R4	Kg			
	PC-PZ	HC-HZ	FZ - FZP	FP			HC-HZ	FZ	FP		PC-PZ	HC-HZ	FZ - FZP	FP
313 R2 (B)	611	384	384	384	345	292	199	199	199	400	450	360	330	350
313 R2 (C)	611	384	384	384	390	292	168	168	168	480	460	370	340	360
313 R3	650	423	423	423	225	245	169	169	169	345	430	340	310	330
313 R4	712	485	485	485	140	186	169	169	169	244	412	322	292	312

	V	V1	Kg	V	V1	Kg	V	V1	Kg	V	V1	Kg	C	Input	I	F	F1	F2	Type	Input	Kg
313 R2 (B)	307	60	23	—	—	—	357	60	28	—	—	—	45	B		195	147	1/4 G	6	B	28
313 R2 (C)	307	60	23	—	—	—	357	60	28	—	—	—	45	B		195	147	1/4 G	6	B	28
313 R3	239	48	15	—	—	—	276	48	17	—	—	—	37	A	457	145	95	1/4 G	5	A	16
313 R4	137.5	24	6	158	38	7	—	—	—	—	—	—	37	A		105	65	1/4 G	4	A	10

313 R

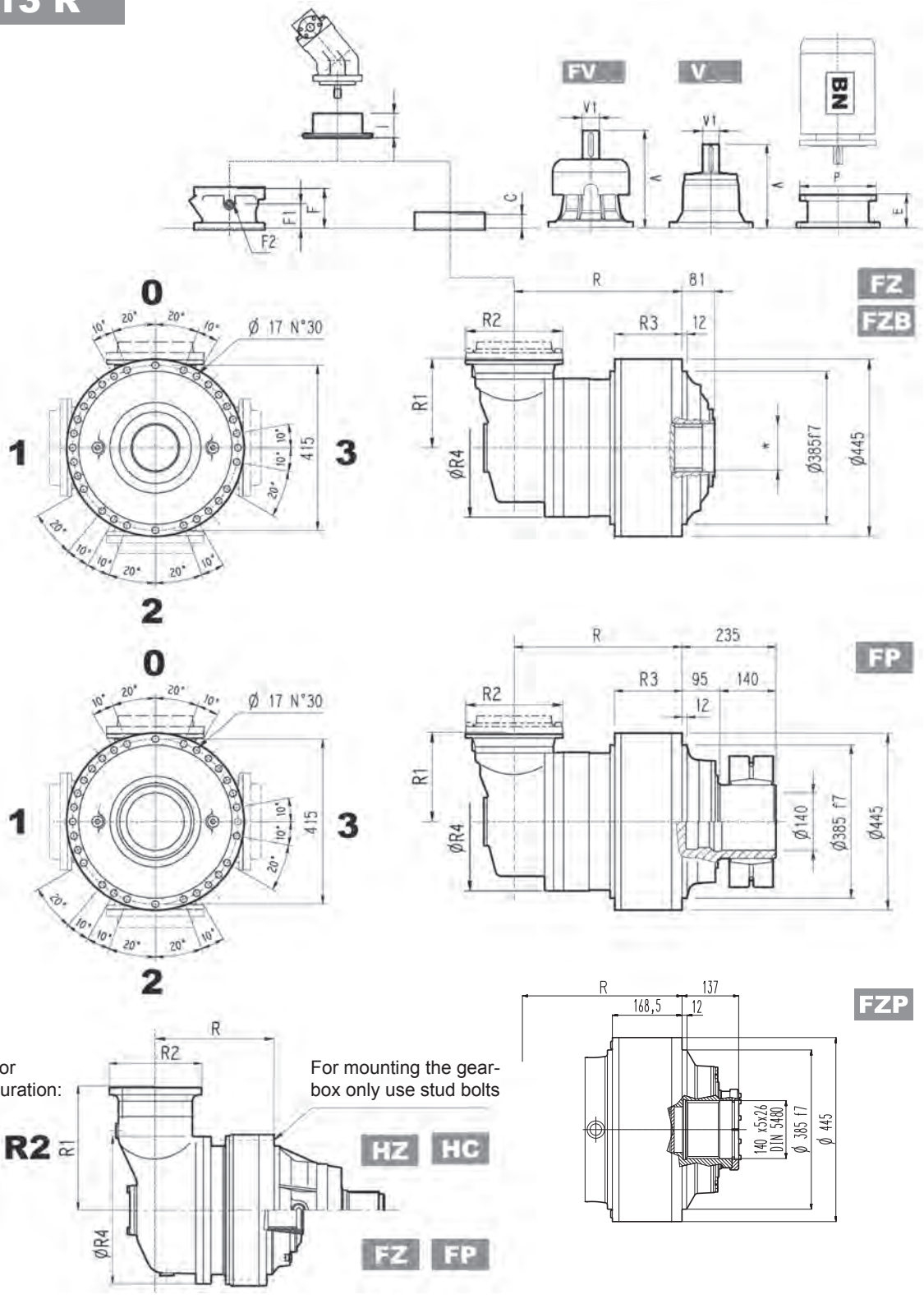

FP | M_{2max} = 79000 Nm

* For dimensions refer to page 366

	P71		P80		P90		P100		P112		P132		P160		P180		P200		P225		P250	
	E	P	E	P	E	P	E	P	E	P	E	P	E	P	E	P	E	P	E	P	E	P
313 R2 (B)	—	—	—	—	—	—	—	—	—	—	—	—	—	—	152	350	182	400	212	450	193	550
313 R2 (C)	—	—	—	—	—	—	—	—	—	—	—	—	—	—	152	350	182	400	212	450	193	550
313 R3	—	—	—	—	—	—	—	—	—	—	114	300	144	350	144	350	174	400	—	—	—	—
313 R4	65	160	84	200	84	200	94	250	94	250	114	300	144	350	—	—	—	—	—	—	—	—

3/V 13 L3

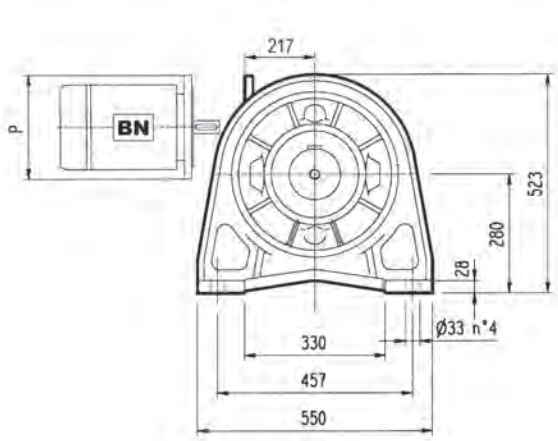

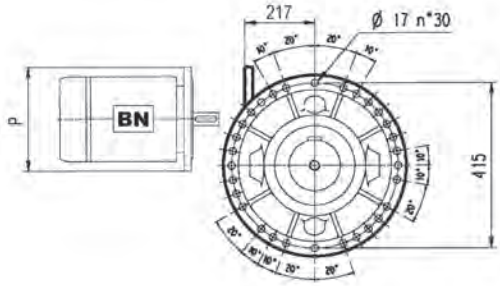

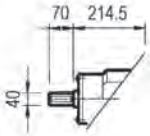

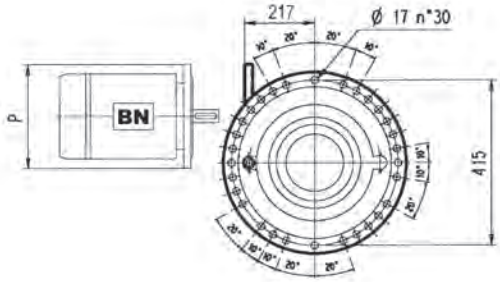

PC

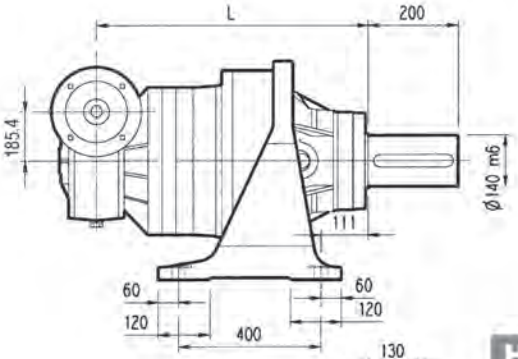

HZ **PZ**

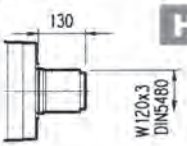

HC

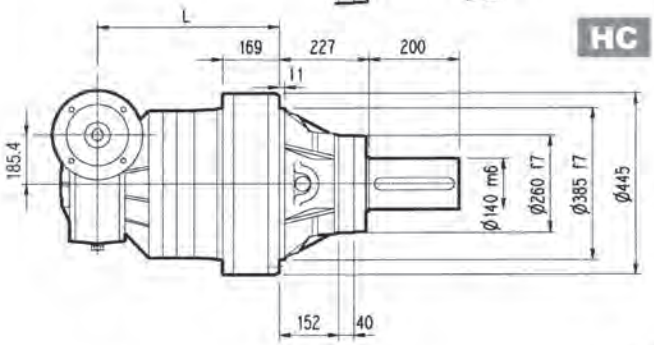

FP

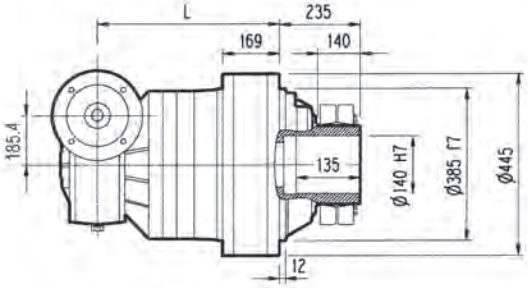

FZ
FZB

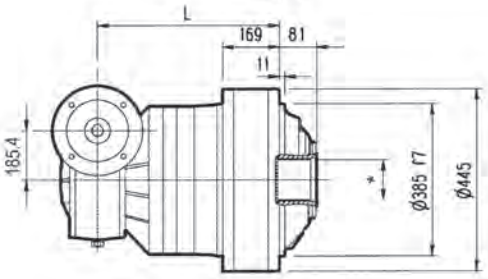

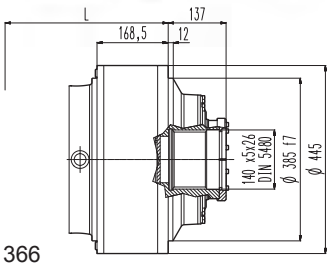

FP | **M_{2max} = 79000 Nm**

* For dimensions refer to page 366

	L				Kg				P80	P90	P100	P112	P132	P160	P180
	PC - PZ	HC - HZ	FZ - FZP	FP	PC - PZ	HC - HZ	FZ - FZP	FP	P	P	P	P	P	P	P
3/V 13 L3	732	505	505	505	475	385	355	375	—	—	250	250	300	350	350

3/V 13 L4

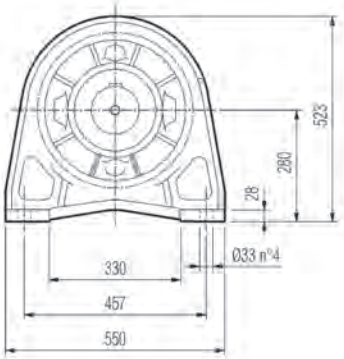

PC

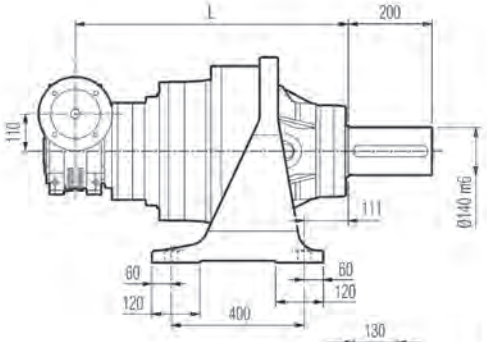

HZ PZ

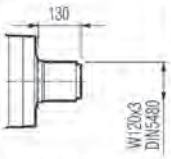

HC

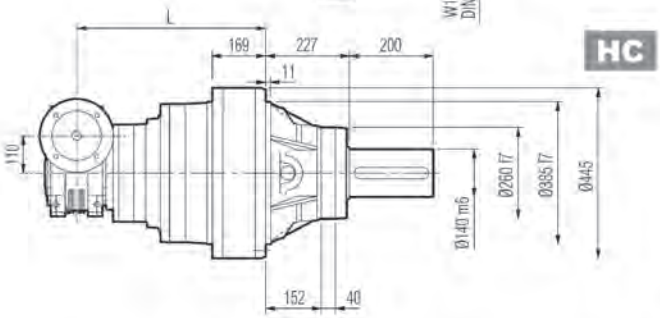

FP

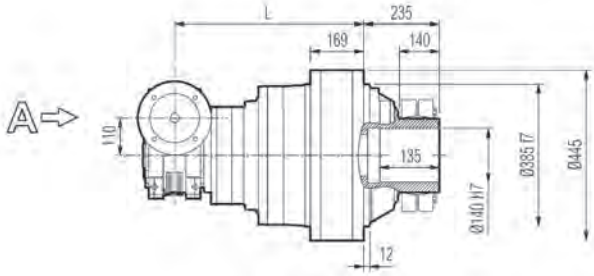

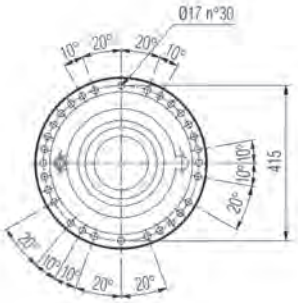

FZ
FZB

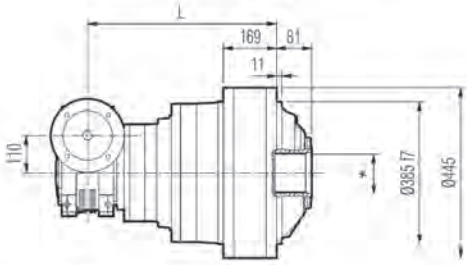

FZP

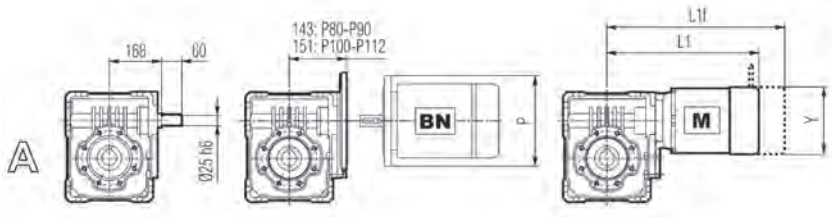

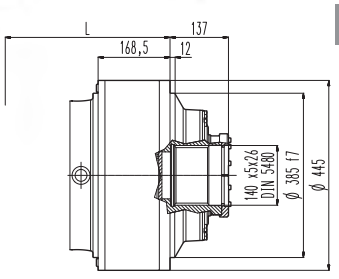

FP | **M_{2max} = 79000 Nm**

* For dimensions refer to page 366

	L				Kg			
	PC - PZ	HC - HZ	FZ - FZP	FP	PC - PZ	HC - HZ	FZ - FZP	FP
3/V 13 L4	780	553	553	553	425	335	305	325

	P80	P90	P100	P112	S2 + M2S			S3 + M3S			S3 + M3L		
	P	P	P	P	L1	L1f	Y	L1	L1f	Y	L1	L1f	Y
3/V 13 L4	200	200	250	250	364	440	156	407	503	193	439	530	193

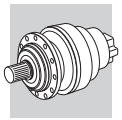

313 L | 313 R | 3/V 13 L

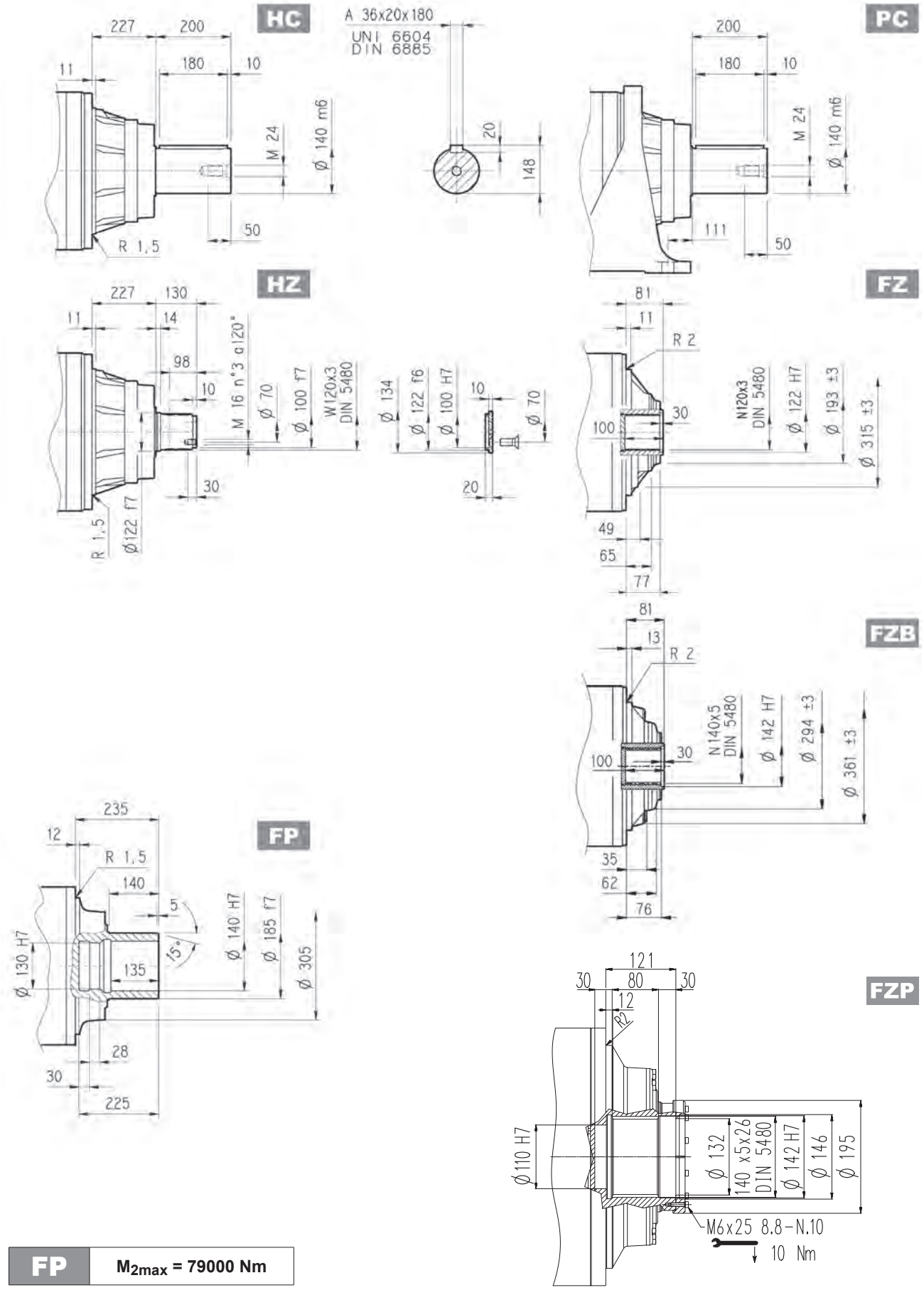

FP	M_{2max} = 79000 Nm

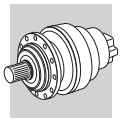

313 L | 313 R | 3/V 13 L

Flange

W0A

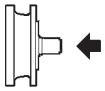

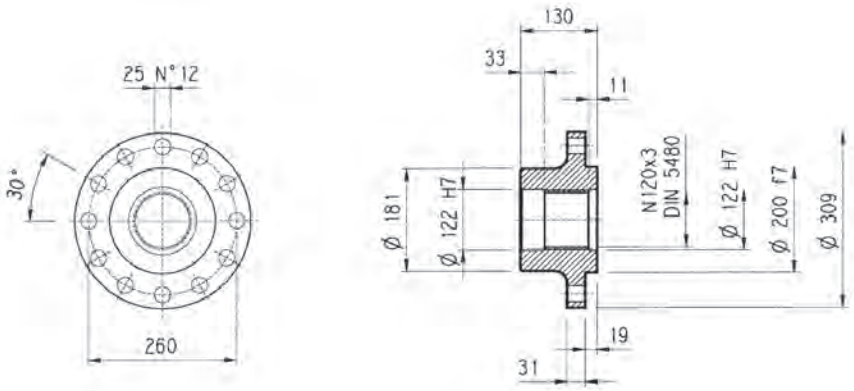

Material: Steel C40

Pinions

P...

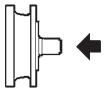

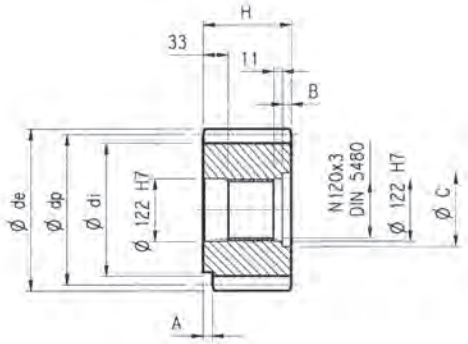

α = 20°

	m	z	x	dp	di	de	H	A	B	C	Material
PPH	16	17	0.500	272	247	315	135	—	5	136	Steel 39NiCrMo3 hardened and tempered
PRI	18	18	0.333	324	294	365	140	—	10	140	

Sleeve coupling

M0A

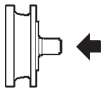

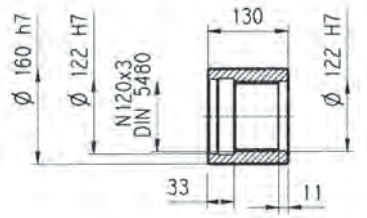

Material: Steel 16CrNi4

Splined bars

B0A

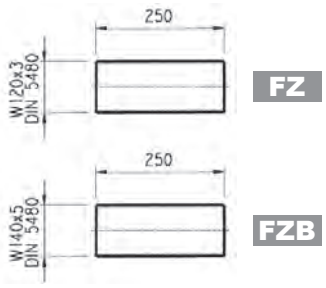

Material: Case hardening steel 18NiCrMo5 UNI 5331
must be case hardened 50-55 HRC

Shrink disc

G0A

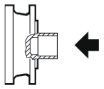

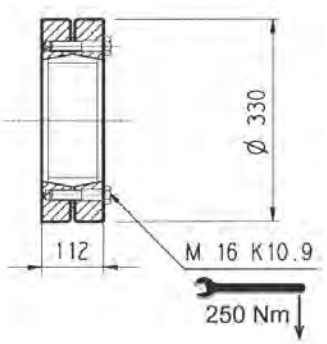

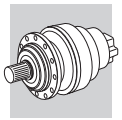

313 L 313 R

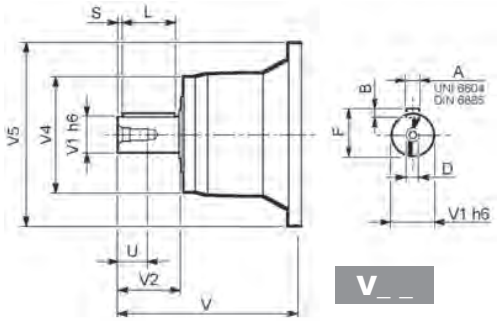

V_ _

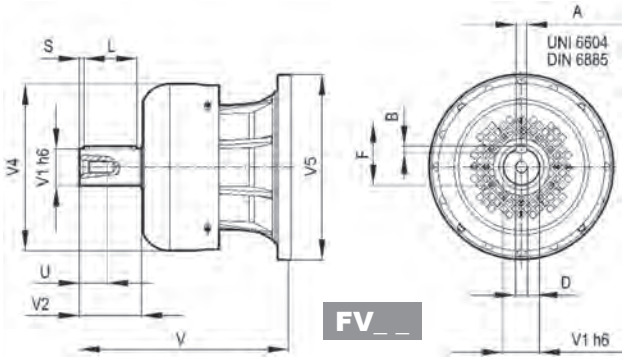

FV_ _

		V	V1	V2	V4	V5	A	B	F	L	S	D	U
313 L1	**V11B**	343	80	130	200	445	22	14	85	110	10	M16	36
	FV11B	451	80	130	347.5	445	22	14	85	110	10	M16	36
313 L2	**V07B**	315	80	130	200	345	22	14	85	110	10	M16	36
	FV07B	375	80	130	347.5	348	22	14	85	110	10	M16	36
	V07A	313	60	105	155	345	18	11	64	90	7.5	M16	36
	FV07A	363	60	105	309	348	18	11	64	90	7.5	M16	36
313 L3	**V05B**	239	48	82	155	245	14	9	51.5	70	6	M16	36
	FV05B	276	48	82	219.5	244	14	9	51.5	70	6	M16	36
313 L4	**V01A**	137.5	24	36	120	186	8	7	27	30	3	M8	19
	V01B	158	38	58	120	186	10	8	41	50	4	M12	28
313 R2 (B) (C)	**V06B**	307	60	105	155	292	18	11	64	90	7.5	M16	36
	FV06B	357	60	105	309	292	18	11	64	90	7.5	M16	36
313 R3	**V05B**	239	48	82	155	245	14	9	51.5	70	6	M16	36
	FV05B	276	48	82	219.5	244	14	9	51.5	70	6	M16	36
313 R4	**V01A**	137.5	24	36	120	186	8	7	27	30	3	M8	19
	V01B	158	38	58	120	186	10	8	41	50	4	M12	28

313 L 313 R

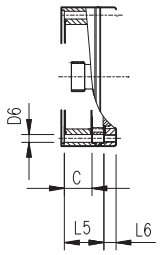

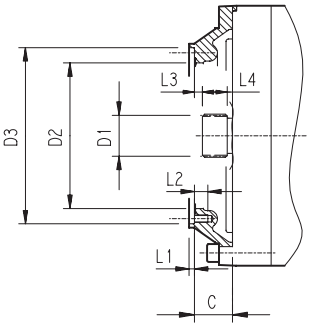

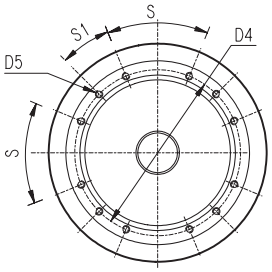

		C	D1	D2	D3	D4	D5	D6	L1	L2	L3	L4	L5	L6	S	S1	Input
313 L1	**V9AD**	75	80x74 DIN 5482	270	335 H7	314	M16 n°8	—	5	30	9.5	40	—	—	60°	30°	D
313 L2	**V9AB**	51	58x53 DIN 5482	195	236 H7	222	M10 n°12	—	4	18	11	22	—	—	45°	22.5°	B
313 L3	**V9AA**	37	40x36 DIN 5482	140	178 H7	165	M10 n°8	—	4	18	9	18	—	—	45°	45°	A
313 L4	**V9AA**	37	40x36 DIN 5482	140	178 H7	165	M10 n°8	11	4	—	9	18	65	18	45°	45°	A
313 R3	**V9AA**	37	40x36 DIN 5482	140	178 H7	165	M10 n°8	11	4	18	9	18	—	—	45°	45°	A
313 R2 (B) (C)	**V9AB**	45	58x53 DIN 5482	195	236 H7	222	M10 n°12	—	4	18	11	22	—	—	45°	22.5°	B
313 R4	**V9AA**	37	40x36 DIN 5482	140	178 H7	165	M10 n°8	11	4	—	9	18	37	18	45°	45°	A

3/V 13 L

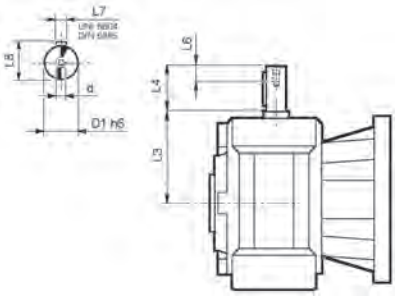

	D1 h6	L3	L4	L6	L7	L8	d
3/V 13 L3_HS	40	214.5	70	20	12	43	M8
3/V 13 L4_HS	25	168	60	19	8	28	M8

Bonfiglioli Riduttori

313 L | 313 R | 3/V 13 L

Permissible radial and axial loads on output shaft with $Fh_2 : n_2 \cdot h = 100000$

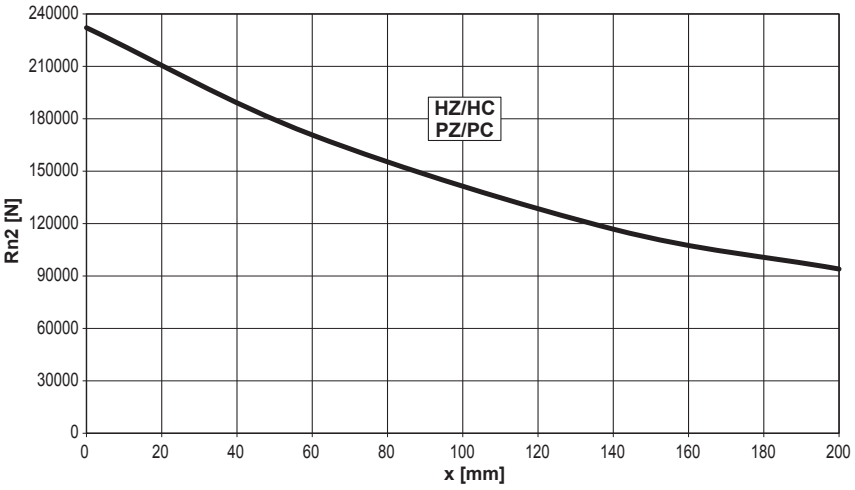

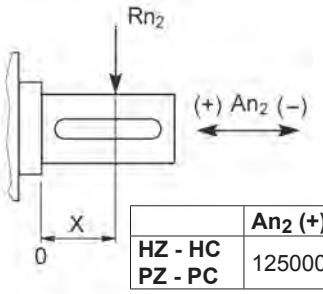

	An2 (+)	An2 (-)
HZ - HC PZ - PC	125000	80000

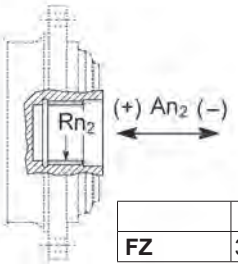

	Rn2	An2 (+/-)
FZ	37133	34812

Load corrective factor fh_2 on shafts	$Fh_2 = n_2 \cdot h$		10000	25000	50000	100000	500000	1000000
	fh_2	FZ	**2.15**	**1.59**	**1.26**	**1.00**	**0.58**	**0.46**
		HZ - HC - PZ - PC	**1.32**	**1.20**	**1.20**	**1.00**	**0.62**	**0.50**

Permissible radial loads on input shaft with $Fh_1 : n_1 \cdot h = 250000$

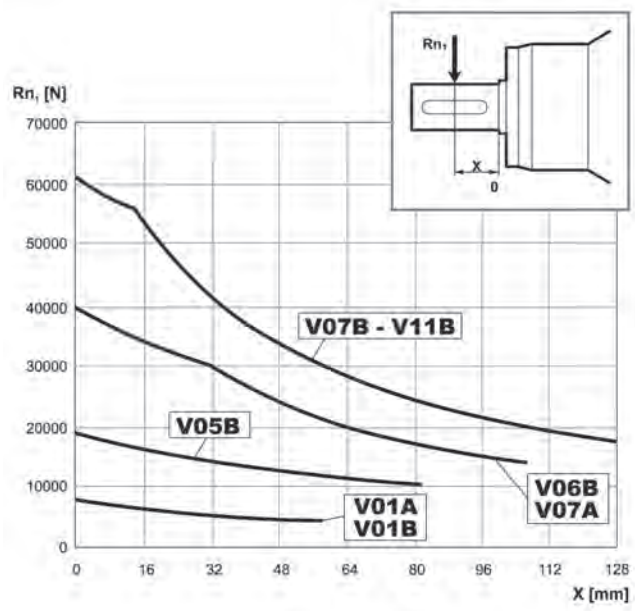

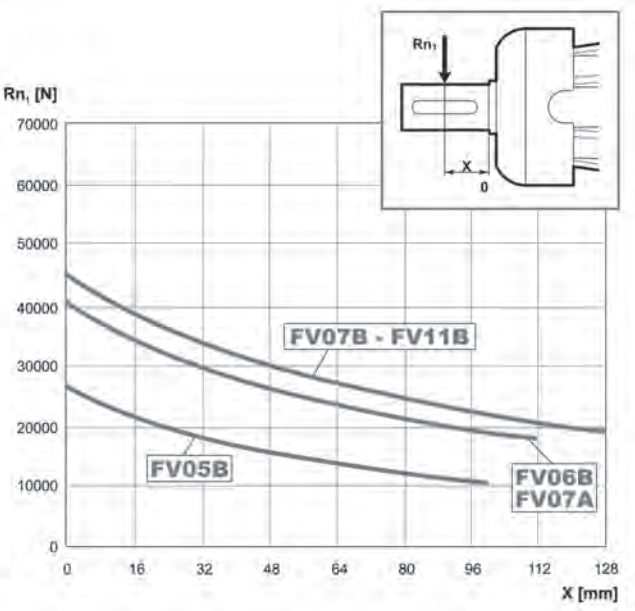

Load corrective factor fh_1 on shafts	$Fh_1 = n_1 \cdot h$	250000	500000	1000000	2000000	5000000	10000000
	fh_1	**1**	**0.79**	**0.63**	**0.50**	**0.37**	**0.29**

313 VK

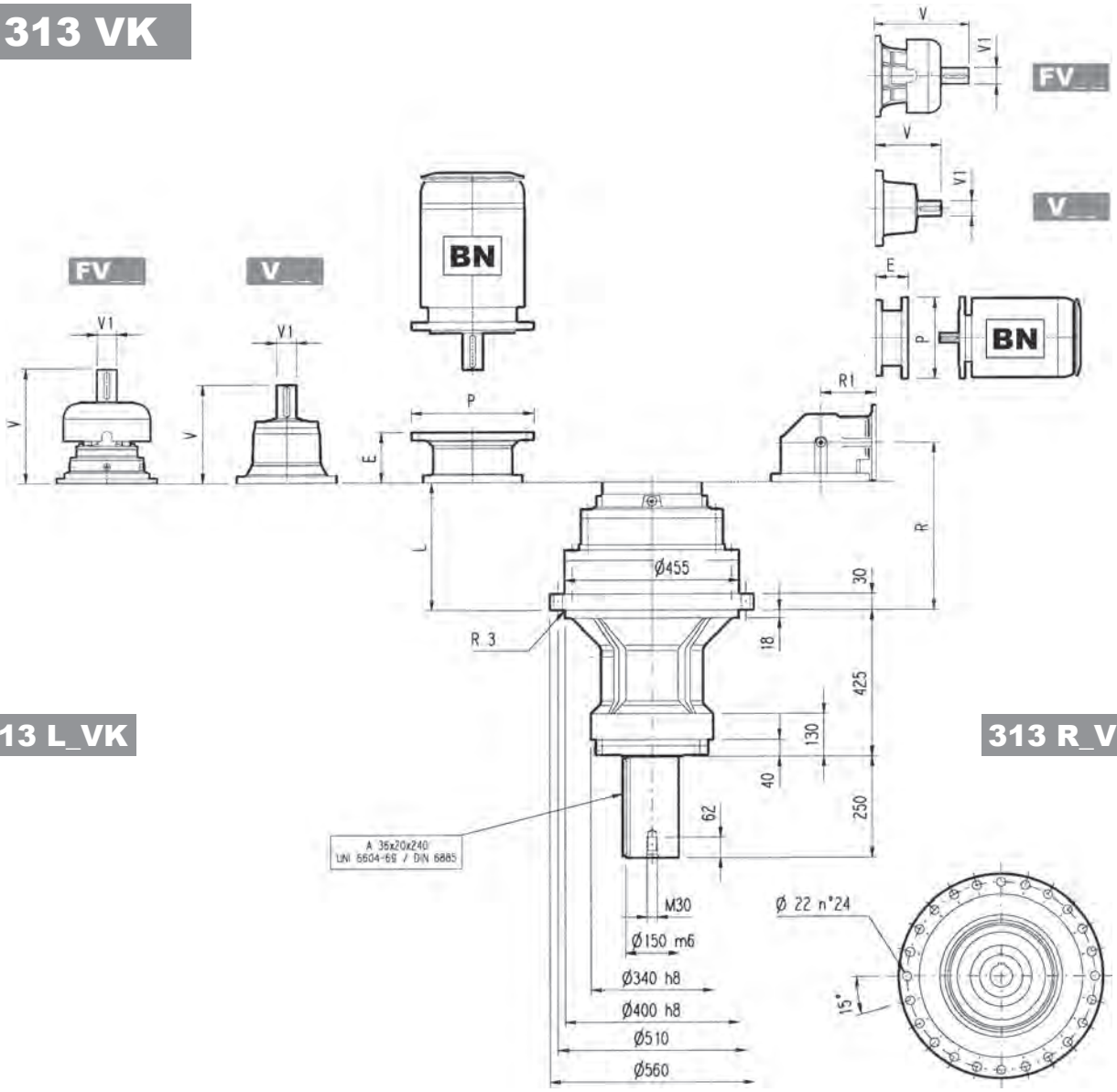

313 L_VK

313 R_VK

	L	Kg	V	V1	Kg	V	V1	Kg	V	V1	Kg	V	V1	Kg
313 L1	158	380	343	80	55	—	—	—	451	80	71	—	—	—
313 L2	308	440	315	80	35	313	60	28	375	80	48	363	60	34
313 L3	397	450	239	48	15	—	—	—	276	48	17	—	—	—
313 L4	462	460	137.5	24	6	158	38	7	—	—	—	—	—	—

	P71		P80		P90		P100		P112		P132		P160		P180		P200		P225		P250	
	E	P	E	P	E	P	E	P	E	P	E	P	E	P	E	P	E	P	E	P	E	P
313 L2	—	—	—	—	—	—	—	—	—	—	—	—	—	—	195	350	186	400	216	450	216	550
313 L3	—	—	—	—	—	—	—	—	—	—	114	300	144	350	144	350	174	400	—	—	—	—
313 L4	65	160	84	200	84	200	94	250	94	250	114	300	144	350	—	—	—	—	—	—	—	—

	R	R1	Kg	V	V1	Kg	V	V1	Kg	V	V1	Kg	V	V1	Kg
313 R2 (B)	388	345	510	307	60	23	—	—	—	357	60	28	—	—	—
313 R2 (C)	388	390	520	307	60	23	—	—	—	357	60	28	—	—	—
313 R3	427	225	490	239	48	15	—	—	—	—	—	—	—	—	—
313 R4	489	140	470	137.5	24	6	158	38	7	—	—	—	—	—	—

	P71		P80		P90		P100		P112		P132		P160		P180		P200		P225		P250	
	E	P	E	P	E	P	E	P	E	P	E	P	E	P	E	P	E	P	E	P	E	P
313 R2 (B)	—	—	—	—	—	—	—	—	—	—	—	—	—	—	152	350	182	400	212	450	193	550
313 R2 (C)	—	—	—	—	—	—	—	—	—	—	—	—	—	—	152	350	182	400	212	450	193	550
313 R3	—	—	—	—	—	—	—	—	—	—	114	300	144	350	144	350	174	400	—	—	—	—
313 R4	65	160	84	200	84	200	94	250	94	250	114	300	144	350	—	—	—	—	—	—	—	—

313 VK

The diagram below allows the calculation of permitted overhung load R_{x2} on the output shaft of gearbox, with radial force applying at a distance x from shaft shoulder.
The curves are relevant to value resulting from the relationship of trust load A_{n2} to radial load R_{n2}, based on n_2 = 10 min^{-1} and 10000 hrs theoretical lifetime.

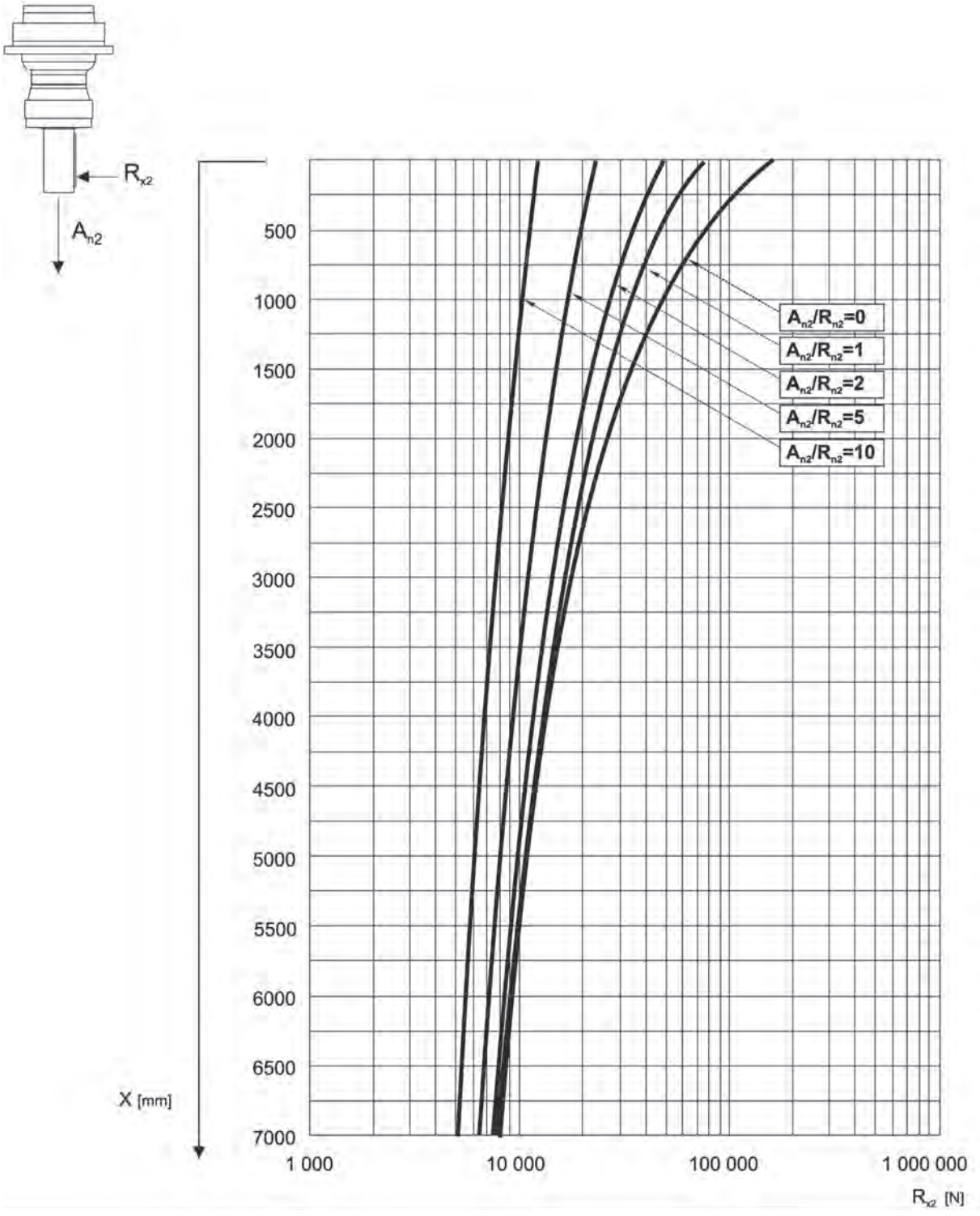

314 L

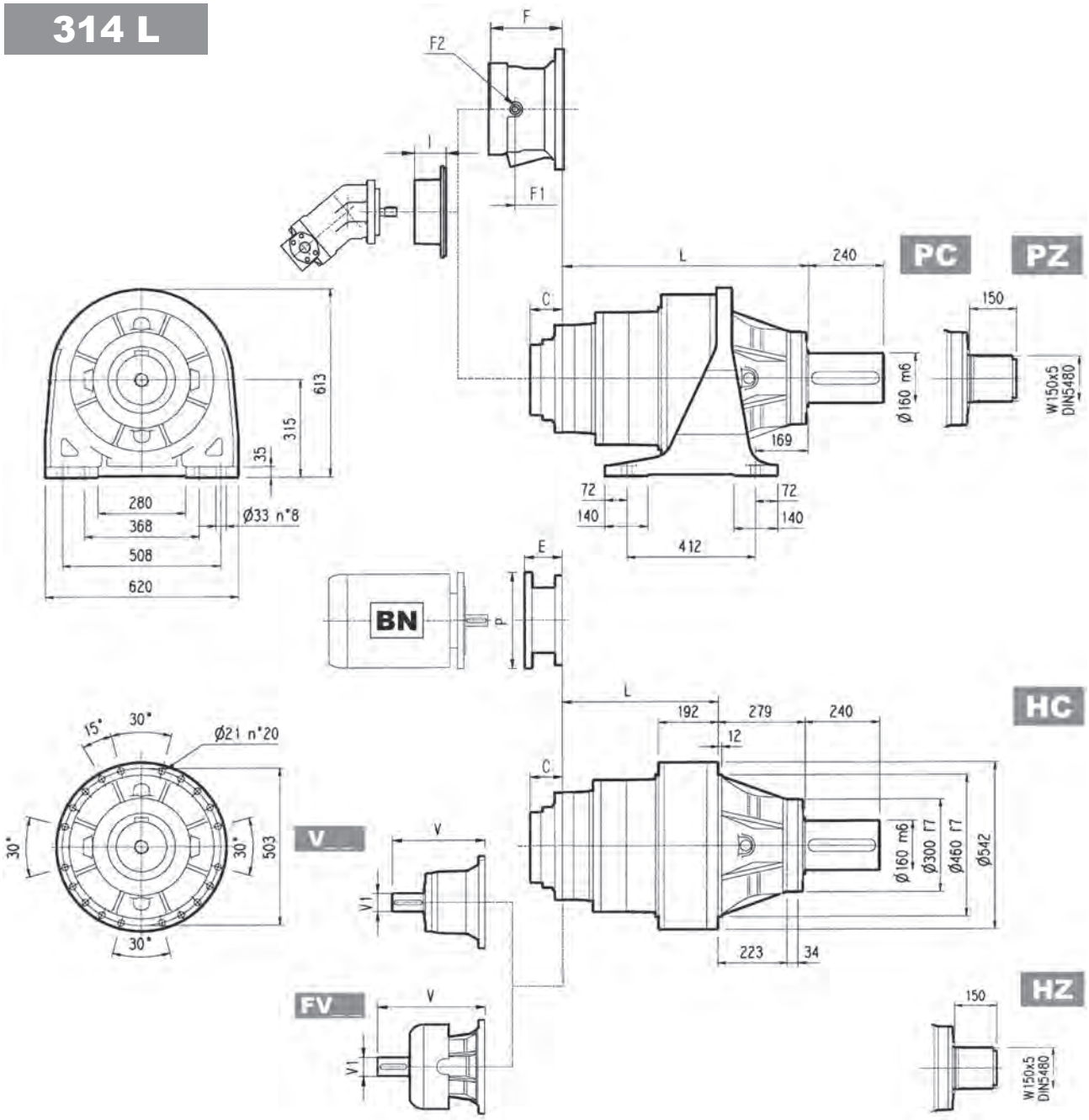

	L				Kg			
	PC - PZ	HC - HZ	FZ - FZP	FP	PC - PZ	HC - HZ	FZ - FZP	FP
314 L1	453	174	174	174	500	370	280	330
314 L2	641	362	362	362	545	415	325	375
314 L3	777	498	498	498	590	460	370	420
314 L4	842	563	563	563	600	470	380	430

	V	V1	Kg	V	V1	Kg	V	V1	Kg	V	V1	Kg	C	Input	I	F	F1	F2	Type	Input	Kg
314 L1	—	—	—	—	—	—	—	—	—	—	—	—	120	L		—	—	—	—	—	—
314 L2	377	80	50	—	—	—	457	80	63	—	—	—	88	C		195	147	1/4 G	6	B	28
314 L3	307	60	23	—	—	—	357	60	28	—	—	—	45	B	457	145	95	1/4 G	5	B	16
314 L4	239	48	15	—	—	—	276	48	17	—	—	—	37	A		105	65	1/4 G	5	A	10

314 L

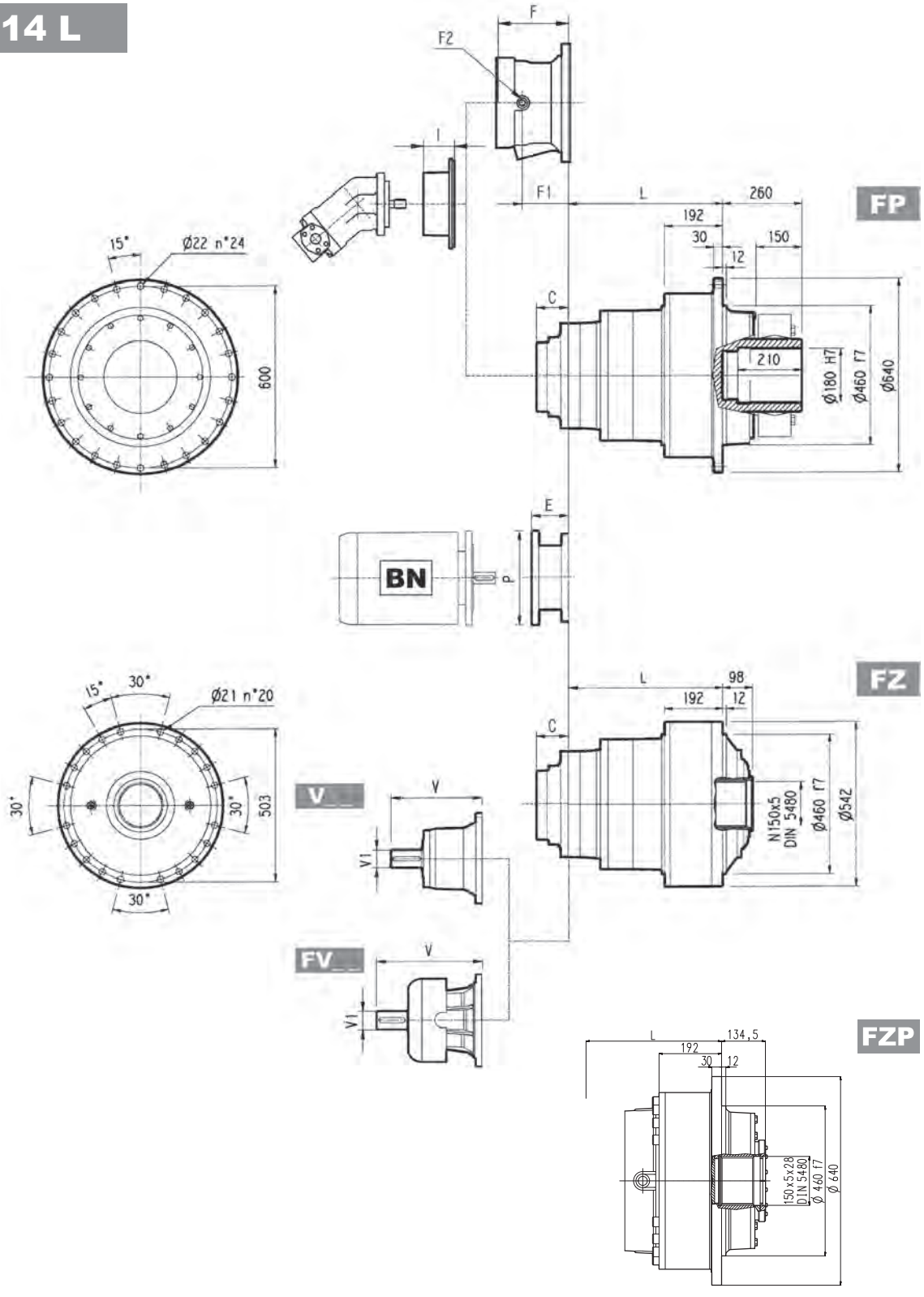

FP | **M_{2max} = 115000 Nm**

	P132		P160		P180		P200		P225		P250	
	E	P	E	P	E	P	E	P	E	P	E	P
314 L2	—	—	—	—	—	—	271	400	301	450	281	550
314 L3	—	—	153	350	153	350	183	400	213	450	193	550
314 L4	114	300	144	350	144	350	174	400	—	—	—	—

314 R

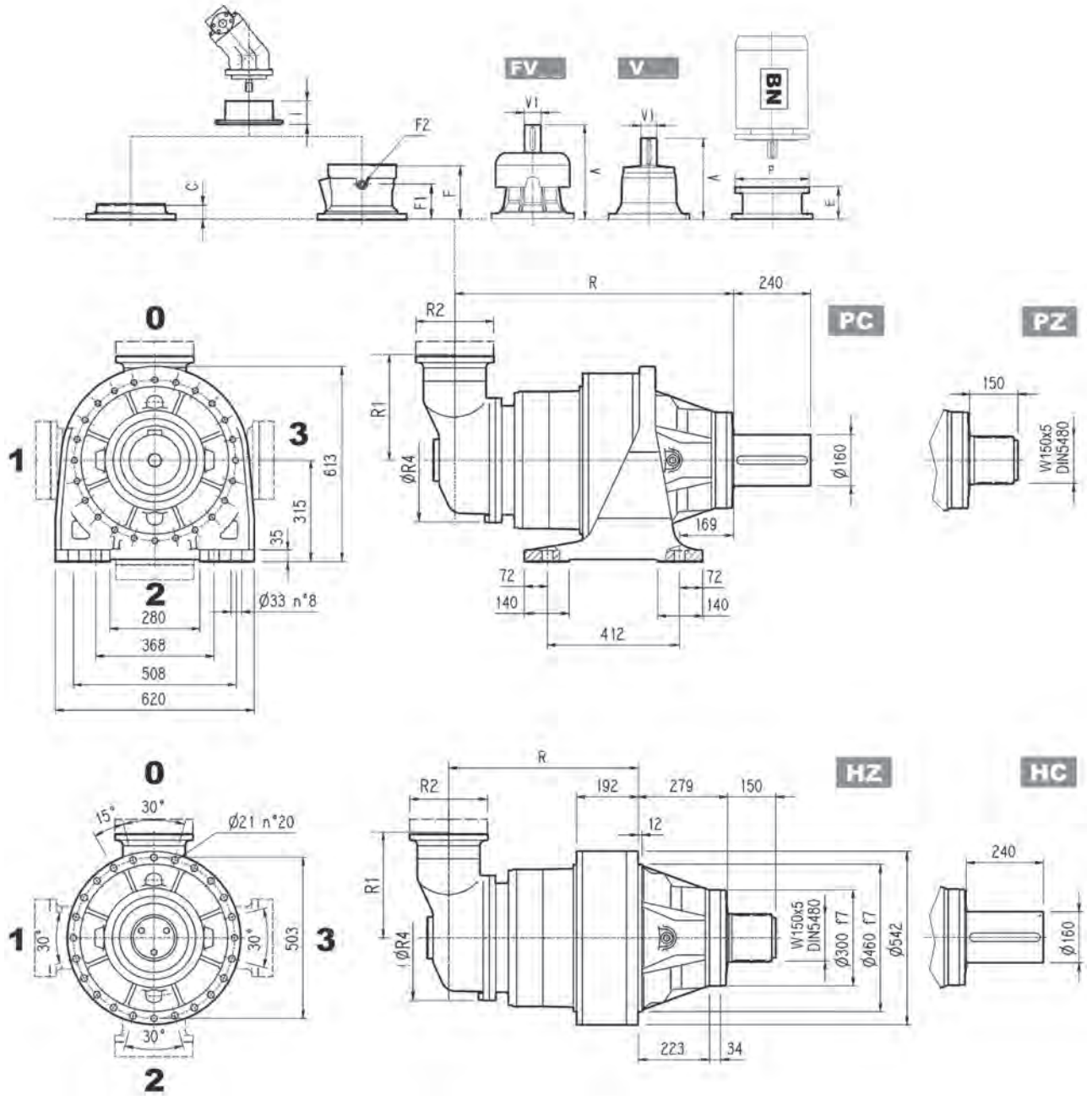

	R				R1	R2	R4	Kg			
	PC-PZ	HC-HZ	FZ - FZP	FP				PC-PZ	HC-HZ	FZ - FZP	FP
314 R3 (B)	848	569	569	569	345	292	400	720	590	500	550
314 R3 (C)	856	587	587	587	390	292	480	730	600	510	560
314 R4	914	635	635	635	140	186	244	680	550	460	510

	V	V1	Kg	V	V1	Kg	V	V1	Kg	V	V1	Kg	C	Input	I	F	F1	F2	Type	Input	Kg
314 R3 (B)	307	60	23	—	—	—	357	60	28	—	—	—	45	B		195	147	1/4 G	6	B	28
314 R3 (C)	307	60	23	—	—	—	357	60	28	—	—	—	45	B		195	147	1/4 G	6	B	28
314 R4	137.5	24	6	158	38	7	—	—	—	—	—	—	37	A	457	105	65	1/4 G	4	A	10

314 R

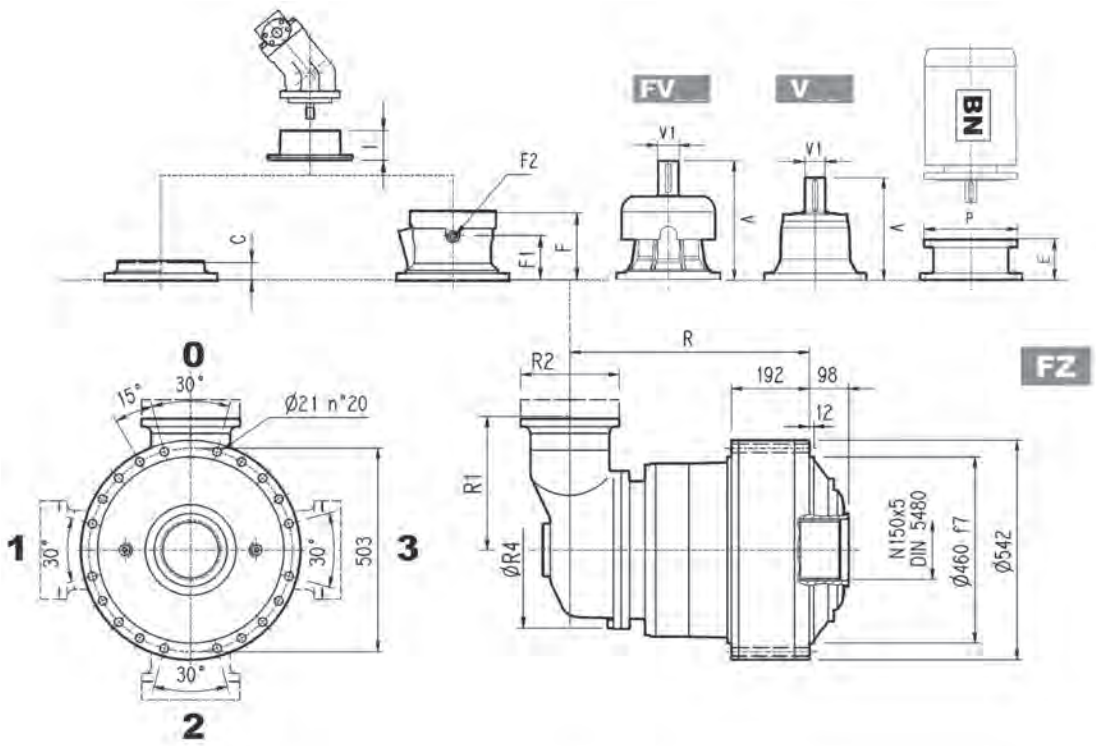

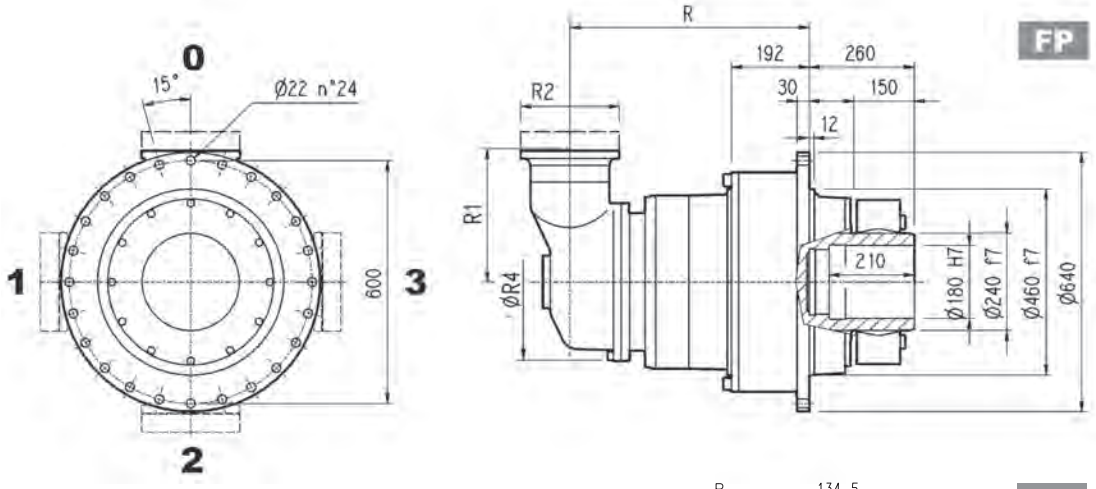

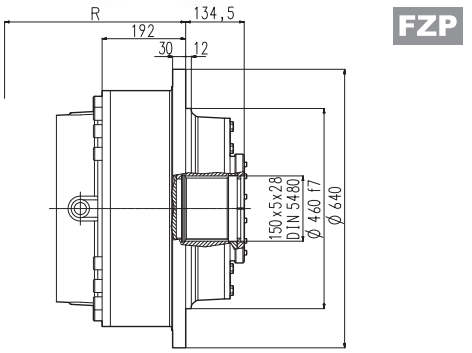

FP M_{2max} = 115000 Nm

	P71		P80		P90		P100		P112		P132		P160		P180		P200		P225		P250	
	E	P	E	P	E	P	E	P	E	P	E	P	E	P	E	P	E	P	E	P	E	P
314 R3 (B)	—	—	—	—	—	—	—	—	—	—	—	—	—	—	152	350	182	400	212	450	193	550
314 R3 (C)	—	—	—	—	—	—	—	—	—	—	—	—	—	—	152	350	182	400	212	450	193	550
314 R4	65	160	84	200	84	200	94	250	94	250	114	300	144	350	—	—	—	—	—	—	—	—

3/V 14 L3

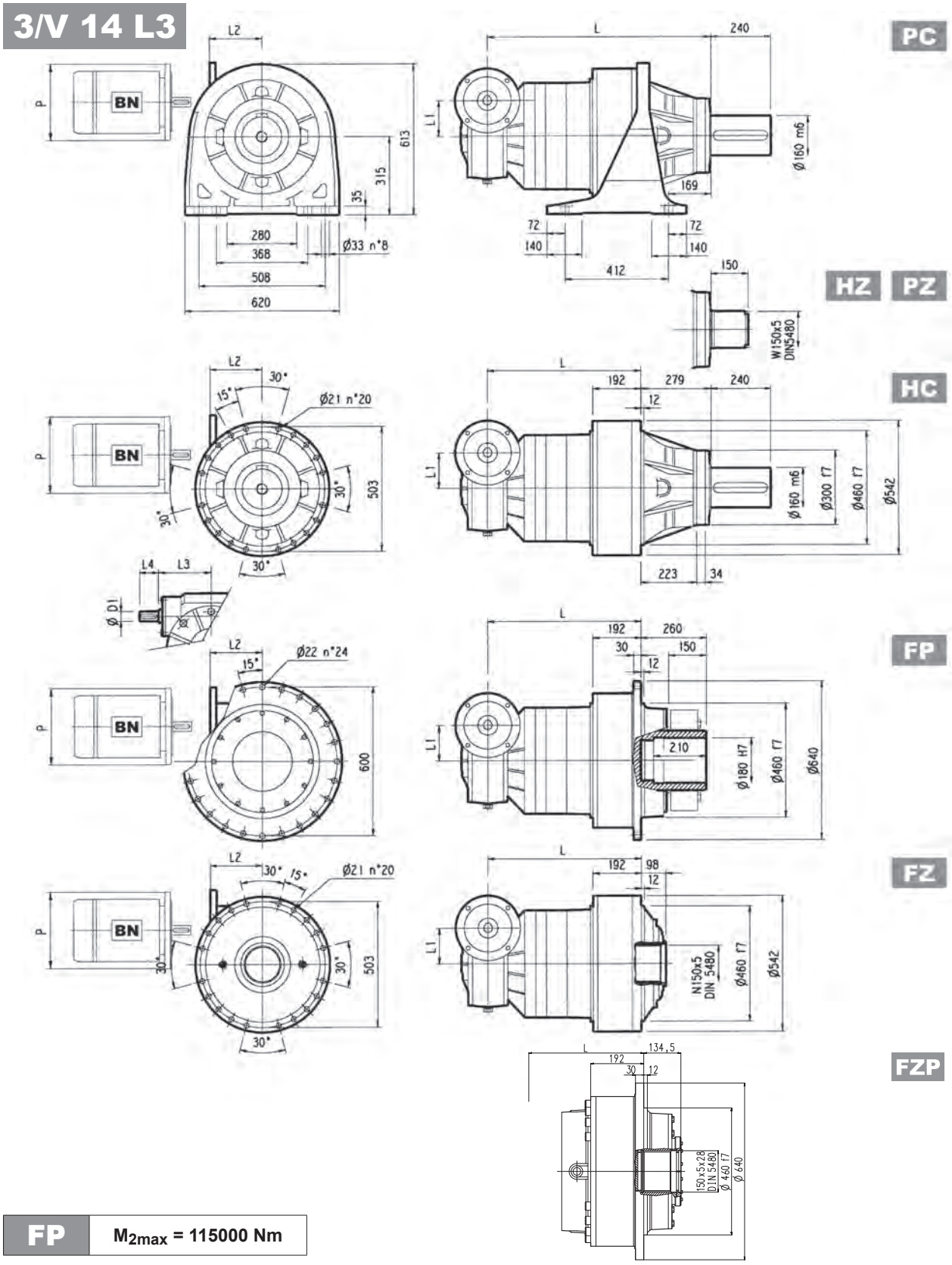

FP M_{2max} = 115000 Nm

	L				L1	L2	D1	L3	L4	Kg			
	PC - PZ	HC - HZ	FZ - FZP	FP						PC - PZ	HC - HZ	FZ - FZP	FP
3/V 14 L3	920	641	641	641	185	217	40	214.5	70	665	535	445	495

	P100	P112	P132		P160		P180	
	P	P	L2	P	L2	P	L2	P
3/V 14 L3	250	250	—	300	—	350	—	350

3/V 14 L4

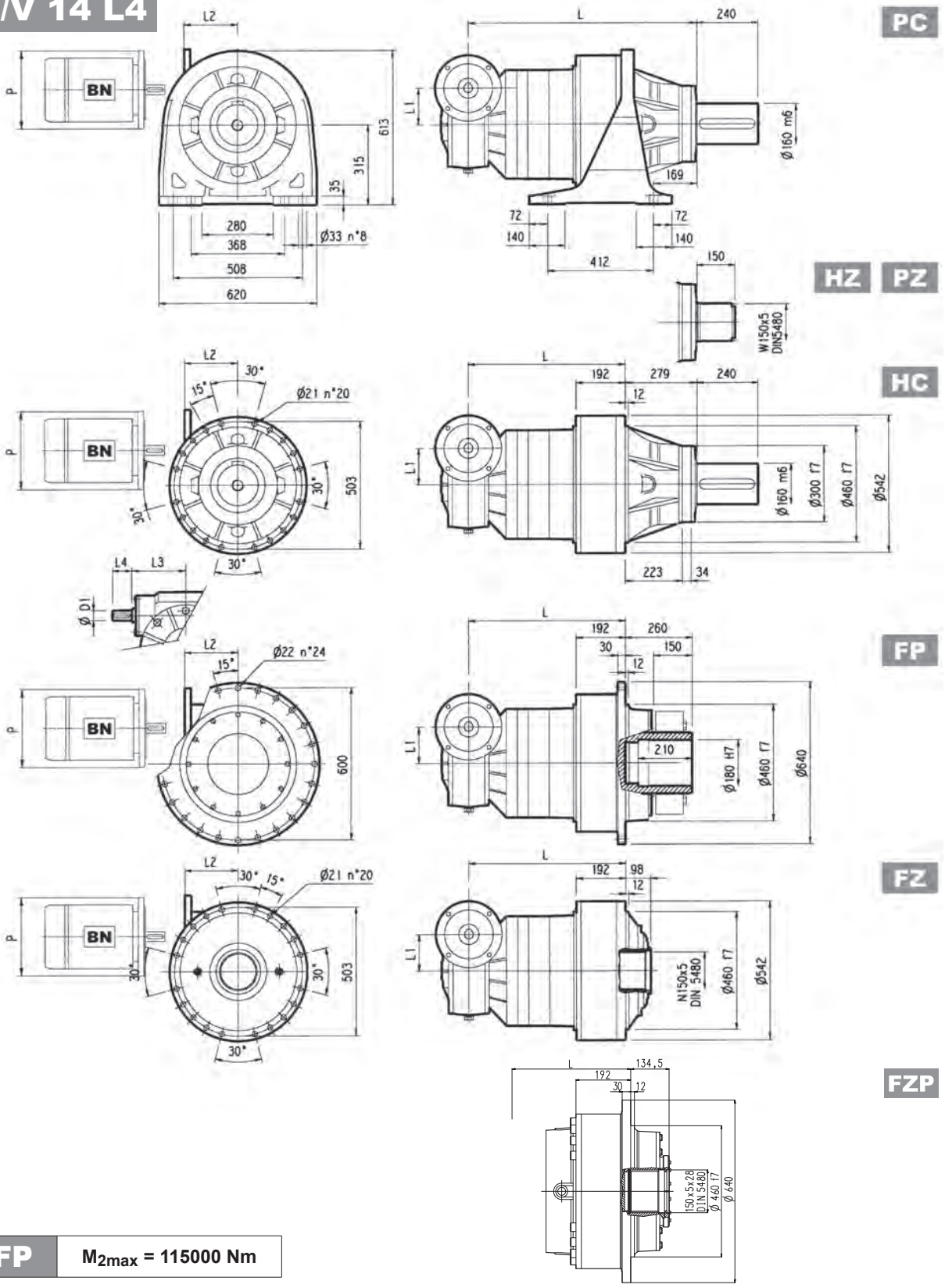

FP M_{2max} = 115000 Nm

	L				L1	L2	D1	L3	L4	Kg			
	PC - PZ	HC - HZ	FZ - FZP	FP						PC - PZ	HC - HZ	FZ - FZP	FP
3/V 14 L4	961	682	682	682	150	190	35	185	65	690	560	470	520

	P100	P112	P132		P160		P180	
	P	P	L2	P	L2	P	L2	P
3/V 14 L4	250	250	—	300	—	350	—	—

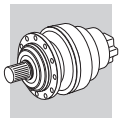

314 L | 314 R | 3/V 14 L

HC

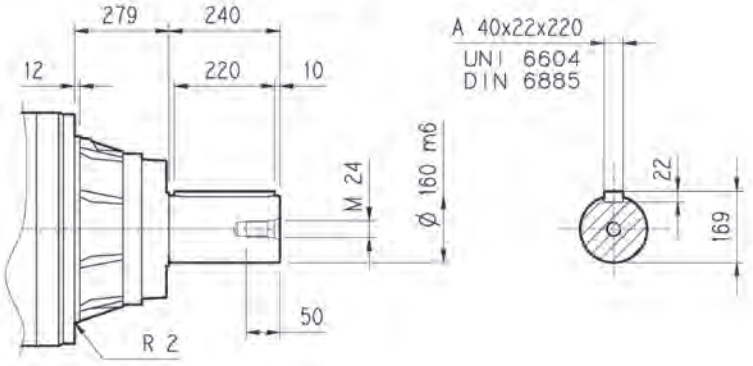

PC

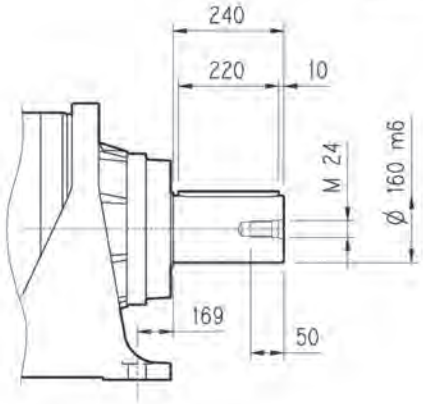

HZ

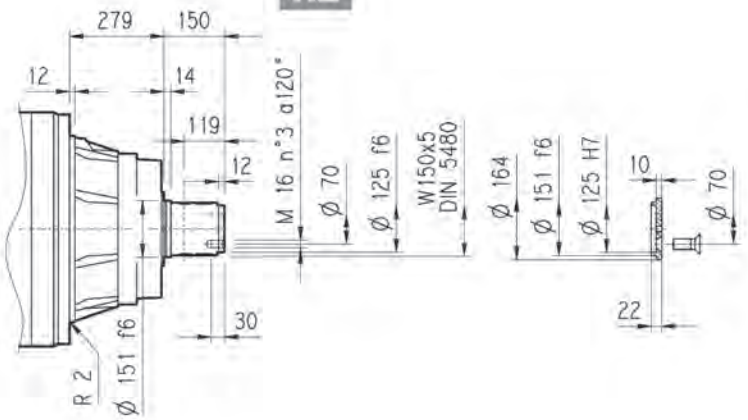

FZ

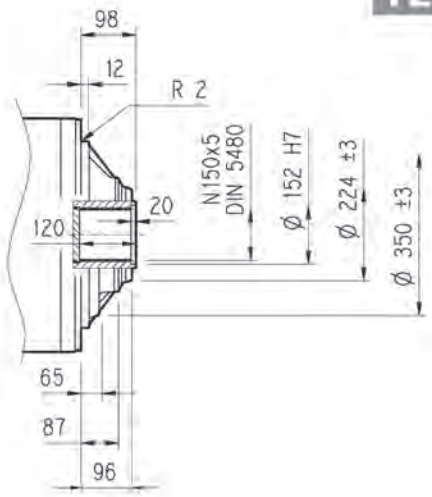

FP

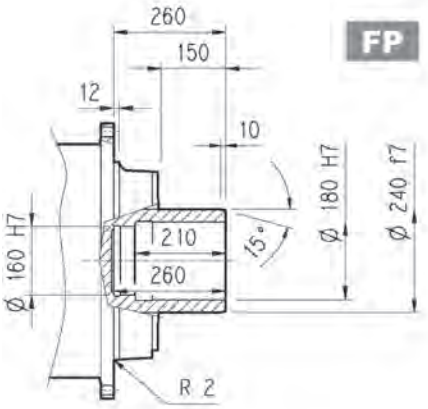

FZP

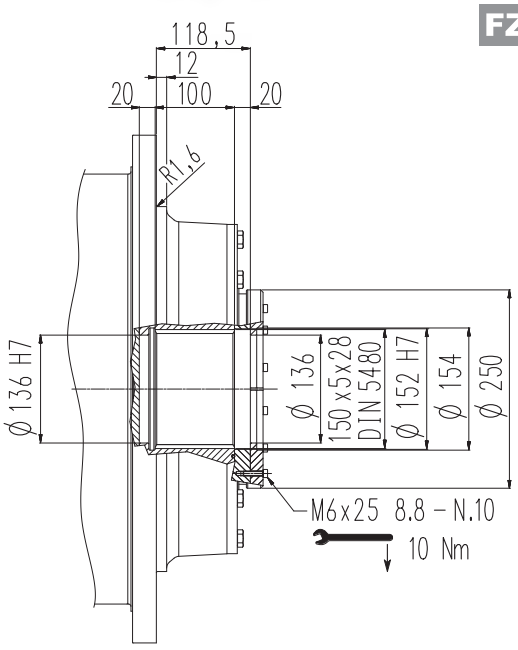

FP	M_{2max} = 115000 Nm

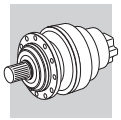

314 L | 314 R | 3/V 14 L

Flange

W0A

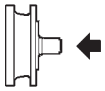

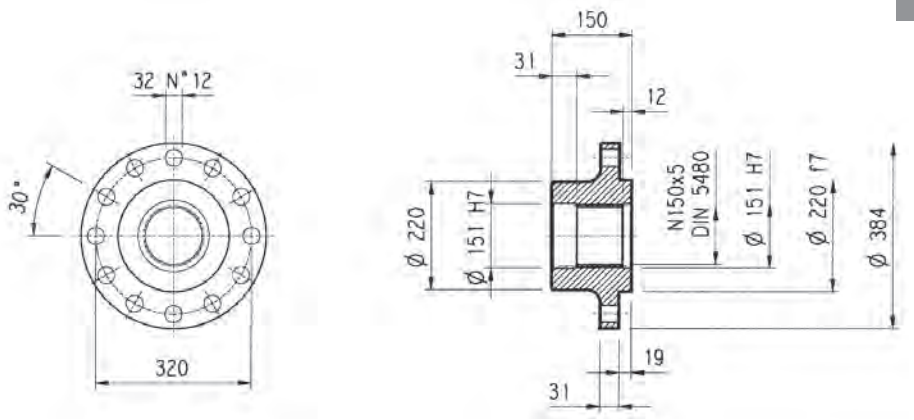

Material: Steel C40

Pinions

P...

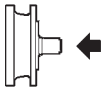

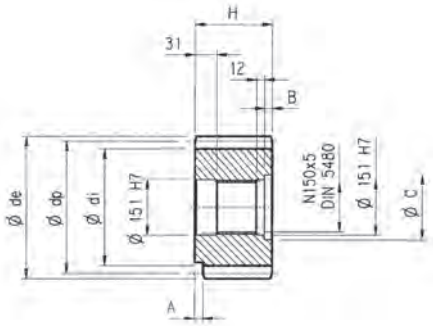

$\alpha = 20°$

	m	z	x	dp	di	de	H	A	B	C	Material
PRG1	18	16	0.500	288	261	342	160	—	10	166	Steel 18NiCrMo5 case hardened
PRG2	18	16	0.617	288	271	339	150	30	—	—	Steel 39NiCrMo3 hardened and tempered

Sleeve coupling

M0A

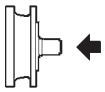

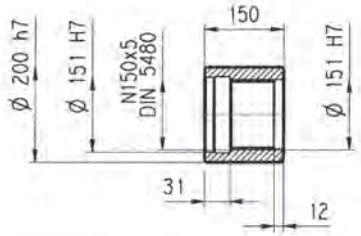

Material: Steel 16CrNi4

Splined bars

B0A

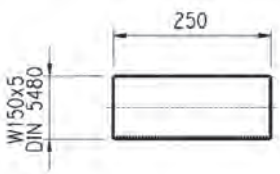

Material: Case hardening steel 18NiCrMo5 UNI 5331
must be case hardened 50-55 HRC

Shrink disc

G0A

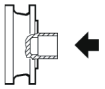

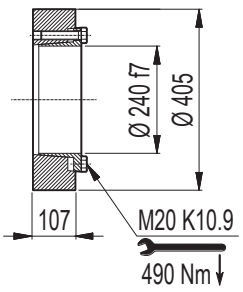

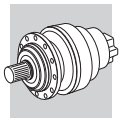

314 L 314 R

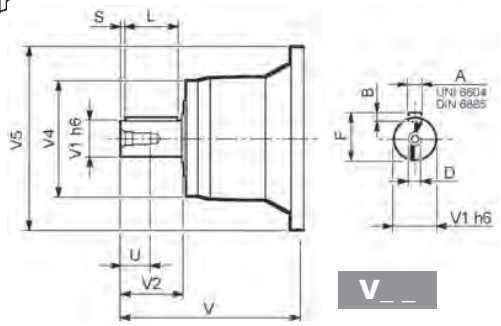

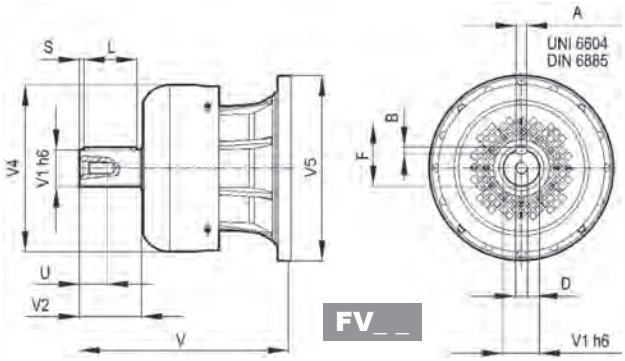

		V	V1	V2	V4	V5	A	B	F	L	S	D	U
314 L2	**V10B**	377	80	130	200	400	22	14	85	110	10	M16	36
	FV10B	457	80	130	347.5	400	22	14	85	110	10	M16	36
314 L3	**V06B**	307	60	105	155	292	18	11	64	90	7.5	M16	36
	FV06B	357	60	105	309	292	18	11	64	90	7.5	M16	36
314 L4	**V05B**	239	48	82	155	245	14	9	51.5	70	6	M16	36
	FV05B	276	48	82	219.5	244	14	9	51.5	70	6	M16	36
314 R3 (B) (C)	**V06B**	307	60	105	155	292	18	11	64	90	7.5	M16	36
	FV06B	357	60	105	309	292	18	11	64	90	7.5	M16	36
314 R4	**V01A**	137.5	24	36	120	186	8	7	27	30	3	M8	19
	V01B	158	38	58	120	186	10	8	41	50	4	M12	28

314 L 314 R

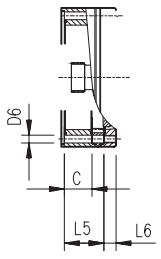

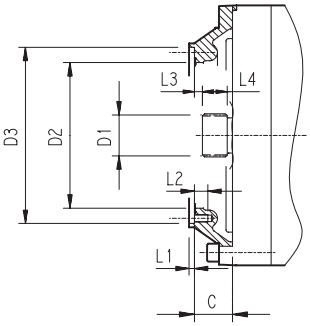

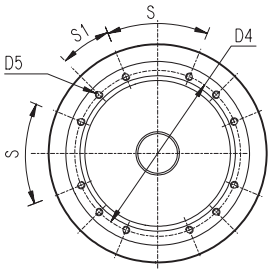

		C	D1	D2	D3	D4	D5	D6	L1	L2	L3	L4	L5	L6	S	S1	Input
314 L1	**V9AL**	120	100x94 DIN 5482	295	336 H7	370	M16 n°15	—	8	21	13	55	—	—	24°	24°	L
314 L2	**V9AC**	88	70x64 DIN 5482	200	282 H7	266	M12 n°12	—	4	22	11	32	—	—	45°	45°	C
314 L3	**V9AB**	45	58x53 DIN 5482	195	236 H7	222	M10 n°12	—	4	18	11	22	—	—	45°	22.5°	B
314 L4	**V9AA**	37	40x36 DIN 5482	140	178 H7	165	M10 n°8	—	4	18	9	18	—	—	45°	45°	A
314 R3 (B) (C)	**V9AB**	45	58x53 DIN 5482	195	236 H7	222	M10 n°12	—	4	18	11	22	—	—	45°	22.5°	B
314 R4	**V9AA**	37	40x36 DIN 5482	140	178 H7	165	M10 n°8	11	4	—	9	18	37	18	45°	45°	A

3/V 14 L

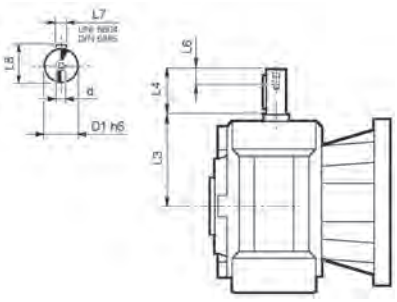

	D1 h6	L3	L4	L6	L7	L8	d
3/V 14 L3_HS	40	214.5	70	20	12	43	M8
3/V 14 L4_HS	35	185	65	20	10	38	M8

314 L | 314 R | 3/V 14 L

Permissible radial and axial loads on output shaft with $Fh_2 : n_2 \cdot h = 100000$

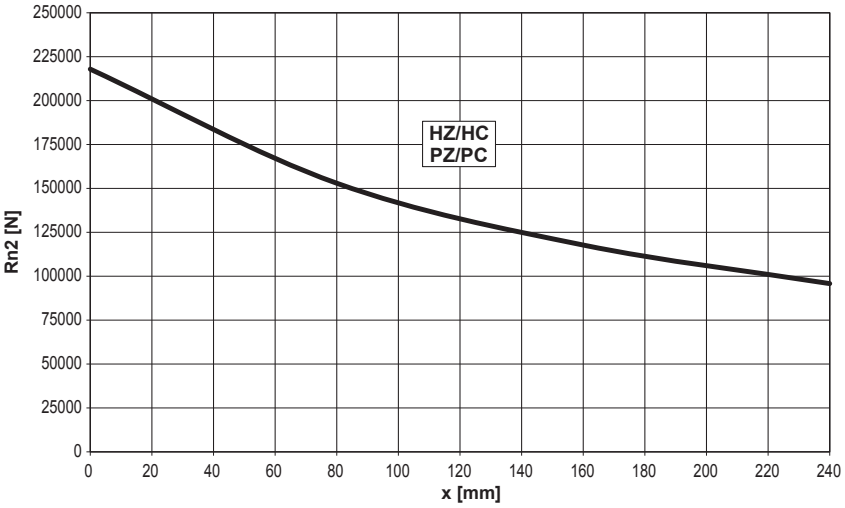

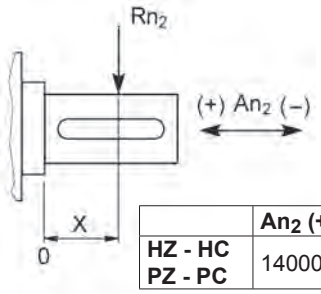

	An_2 (+)	An_2 (-)
HZ - HC PZ - PC	140000	105000

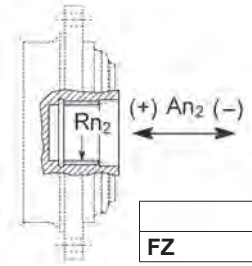

	Rn_2	An_2 (+/-)
FZ	41774	41774

Load corrective factor fh_2 on shafts	$Fh_2 = n_2 \cdot h$		10000	25000	50000	100000	500000	1000000
	fh_2	FZ	**2.15**	**1.59**	**1.26**	**1.00**	**0.58**	**0.46**
		HZ - HC - PZ - PC	**2.00**	**1.52**	**1.23**	**1.00**	**0.62**	**0.50**

Permissible radial loads on input shaft with $Fh_1 : n_1 \cdot h = 250000$

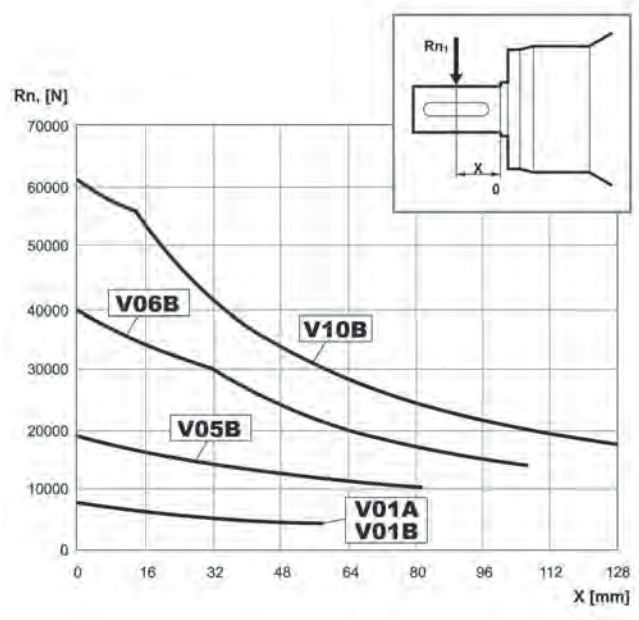

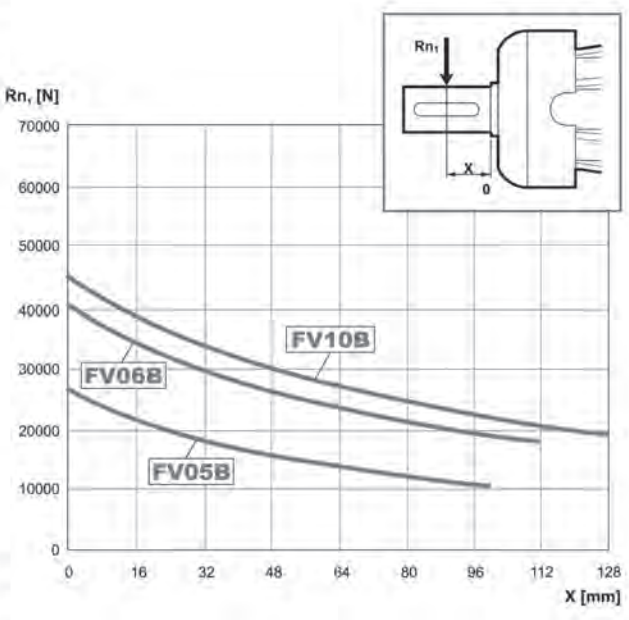

Load corrective factor fh_1 on shafts	$Fh_1 = n_1 \cdot h$	250000	500000	1000000	2000000	5000000	10000000
	fh_1	**1**	**0.79**	**0.63**	**0.50**	**0.37**	**0.29**

314 VK

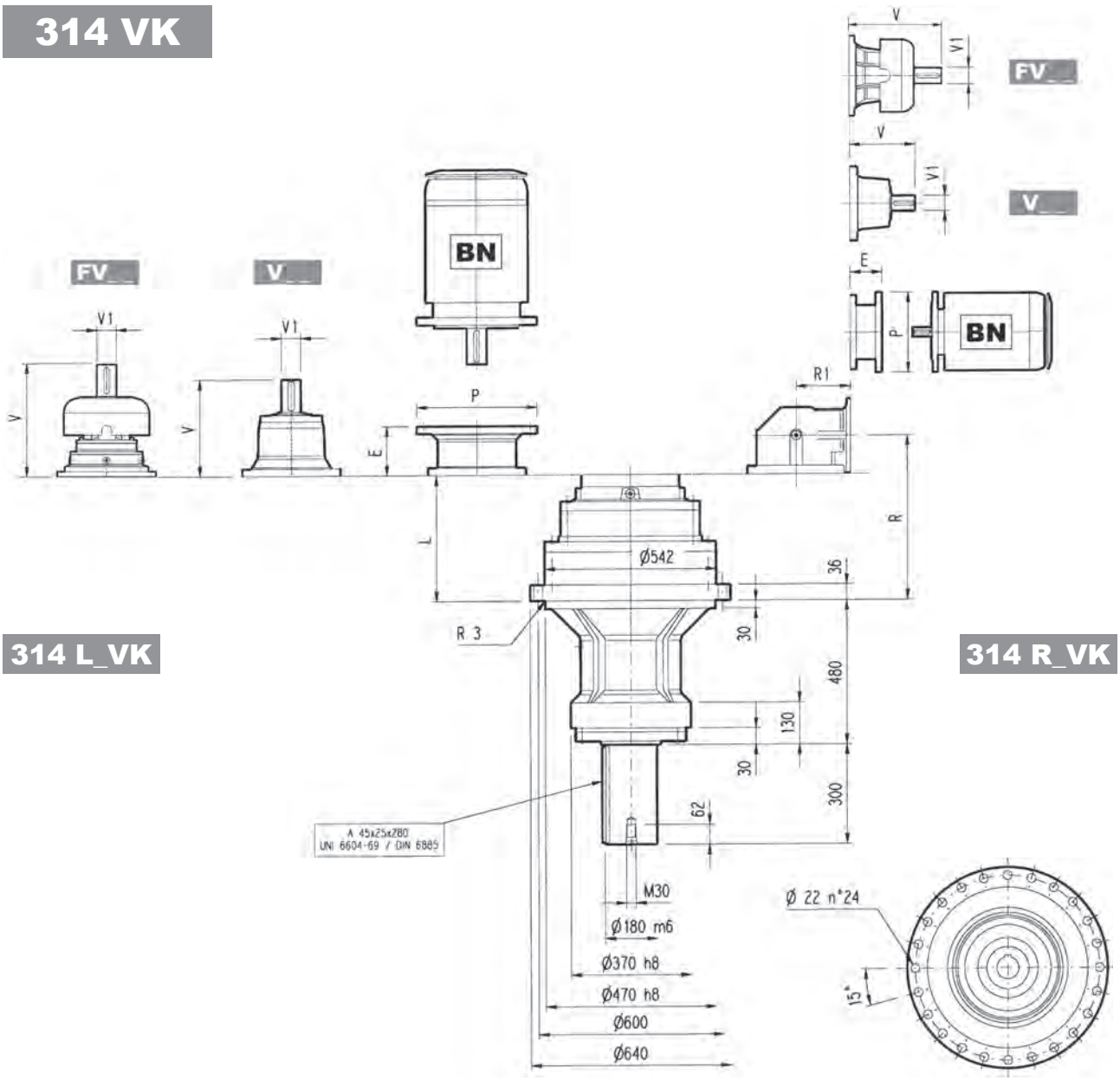

314 L_VK

314 R_VK

	L	Kg	V	V1	Kg	V	V1	Kg	V	V1	Kg	V	V1	Kg	P132 E	P132 P	P160 E	P160 P	P180 E	P180 P	P200 E	P200 P	P225 E	P225 P	P250 E	P250 P
314 L2	386	650	348	80	55	—	—	—	457	80	63	—	—	—	—	—	—	—	—	—	271	400	301	450	281	550
314 L3	519	700	315	80	35	313	60	28	357	60	28	—	—	—	—	—	153	350	153	350	183	400	213	450	193	550
314 L4	608	710	239	48	15	—	—	—	276	48	17	—	—	—	114	300	144	350	144	350	174	400	—	—	—	—

	R	R1	Kg	V	V1	Kg	V	V1	Kg	V	V1	Kg	V	V1	Kg
314 R3 (B)	611	345	720	307	60	23	—	—	—	357	60	28	—	—	—
314 R3 (C)	611	390	730	307	60	23	—	—	—	357	60	28	—	—	—
314 R4	638	225	690	137.5	24	6	158	38	7	—	—	—	—	—	—

	P71 E	P71 P	P80 E	P80 P	P90 E	P90 P	P100 E	P100 P	P112 E	P112 P	P132 E	P132 P	P160 E	P160 P	P180 E	P180 P	P200 E	P200 P	P225 E	P225 P	P250 E	P250 P
314 R3 (B)	—	—	—	—	—	—	—	—	—	—	—	—	—	—	152	350	182	400	212	450	193	550
314 R3 (C)	—	—	—	—	—	—	—	—	—	—	—	—	—	—	152	350	182	400	212	450	193	550
314 R4	65	160	84	200	84	200	94	250	94	250	114	300	144	350	—	—	—	—	—	—	—	—

314 VK

The diagram below allows the calculation of permitted overhung load R_{x2} on the output shaft of gearbox, with radial force applying at a distance x from shaft shoulder.
The curves are relevant to value resulting from the relationship of trust load A_{n2} to radial load R_{n2}, based on n_2 = 10 min^{-1} and 10000 hrs theoretical lifetime.

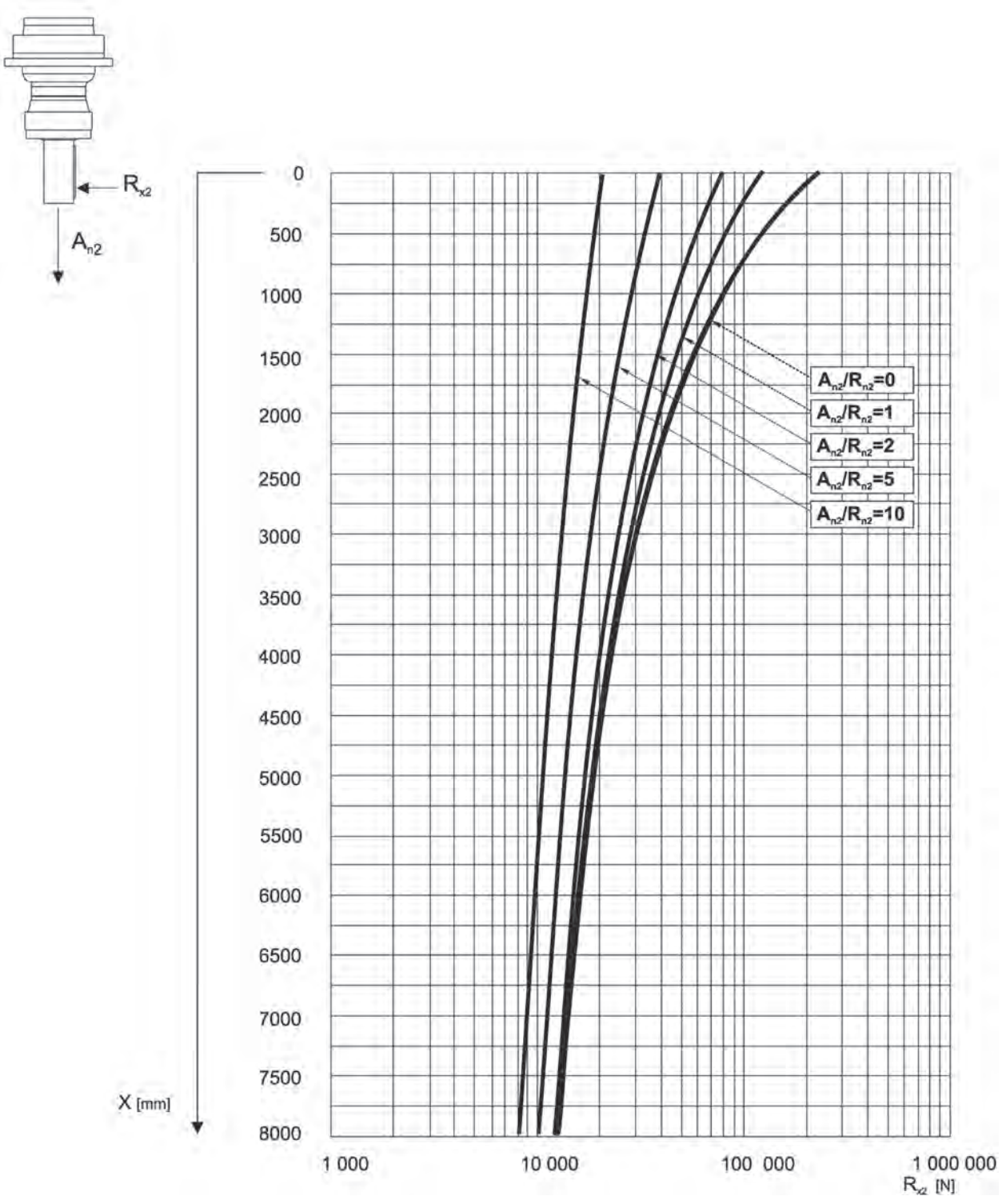

315 L

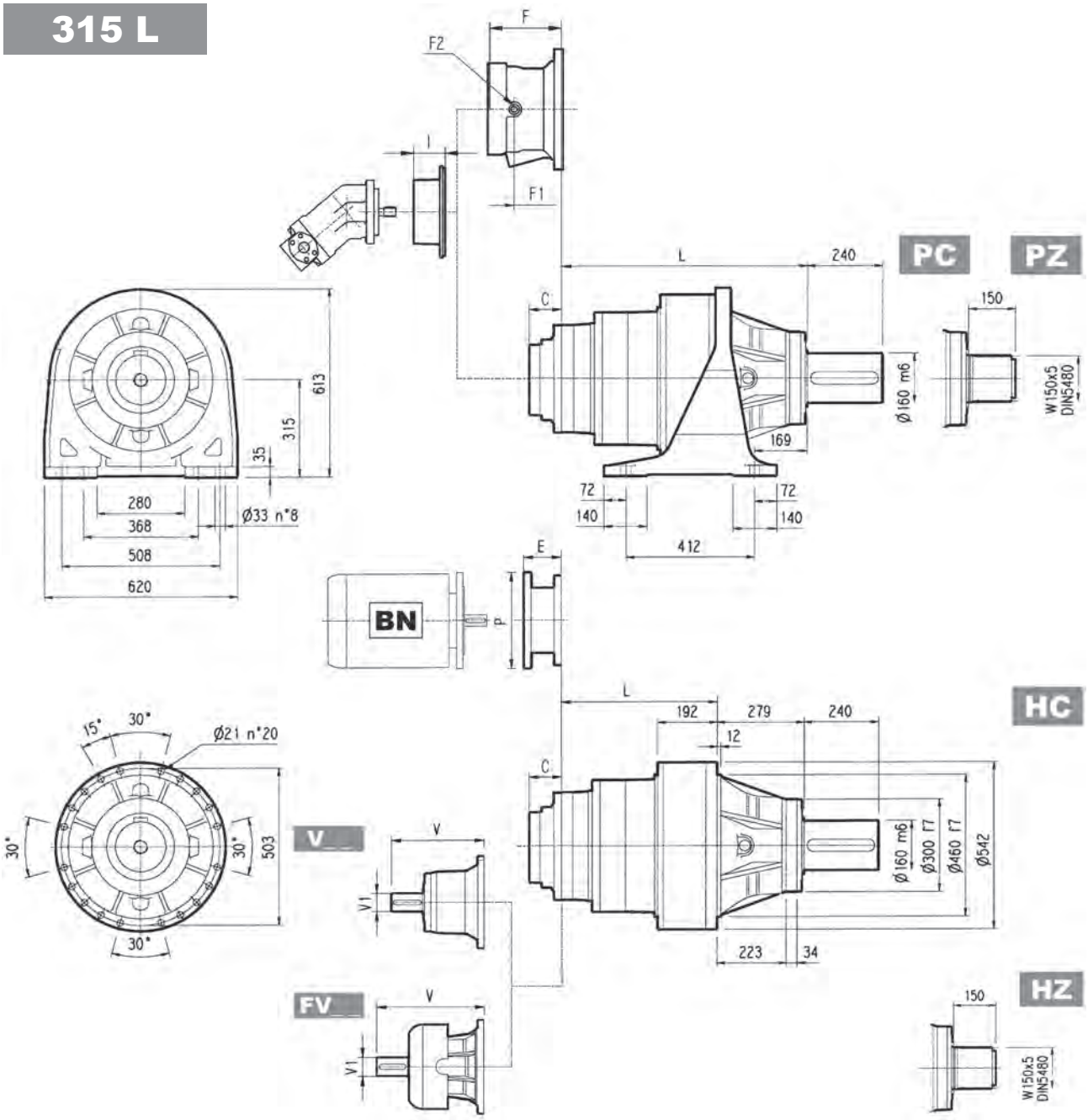

	L				Kg			
	PC - PZ	HC - HZ	FZ - FZP	FP	PC - PZ	HC - HZ	FZ - FZP	FP
315 L1	453	174	174	174	500	370	280	330
315 L2	665	386	386	386	585	455	365	415
315 L3	798	519	519	519	630	500	410	460
315 L4	887	608	608	608	642	512	422	472

	V	V1	Kg	V	V1	Kg	V	V1	Kg	V	V1	Kg	C	Input	I	F	F1	F2	Type	Input	Kg
315 L1	556	120	125	—	—	—	—	—	—	—	—	—	116	E		—	—	—	—	—	—
315 L2	348	80	55	—	—	—	456	80	85	—	—	—	81	D		232	185	1/4 G	6	B	35
315 L3	315	80	35	313	60	28	375	80	48	363	60	34	51	B	457	201	153	1/4 G	6	B	28
315 L4	239	48	15	—	—	—	276	48	17	—	—	—	37	A		145	95	1/4 G	5	A	16

315 L

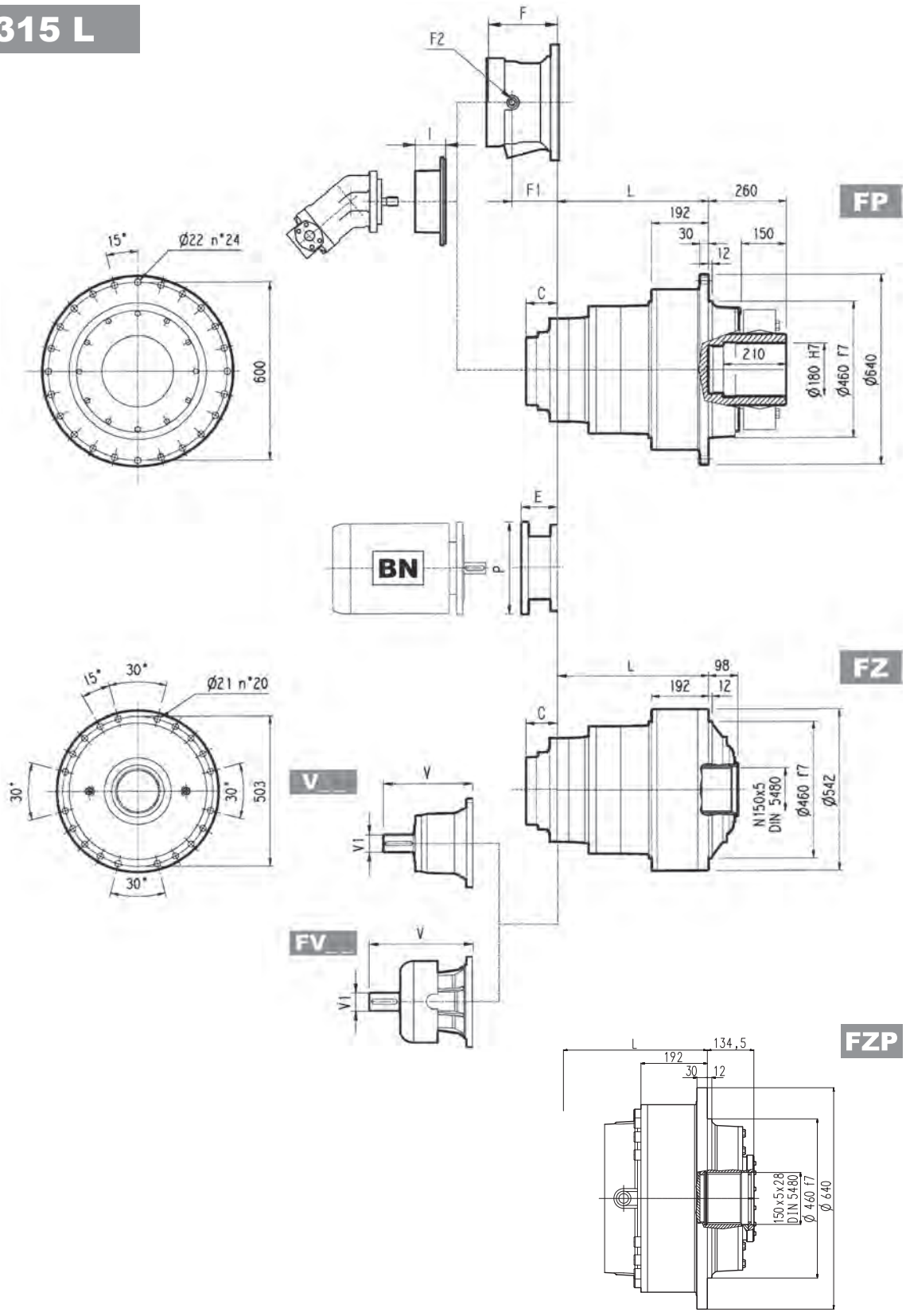

FP | M_{2max} = 135000 Nm

	P132		P160		P180		P200		P225		P250	
	E	P	E	P	E	P	E	P	E	P	E	P
315 L2	—	—	—	—	—	—	267	400	297	450	297	550
315 L3	—	—	—	—	195	350	186	400	216	450	215	550
315 L4	114	300	144	350	144	350	174	400	—	—	—	—

315 R

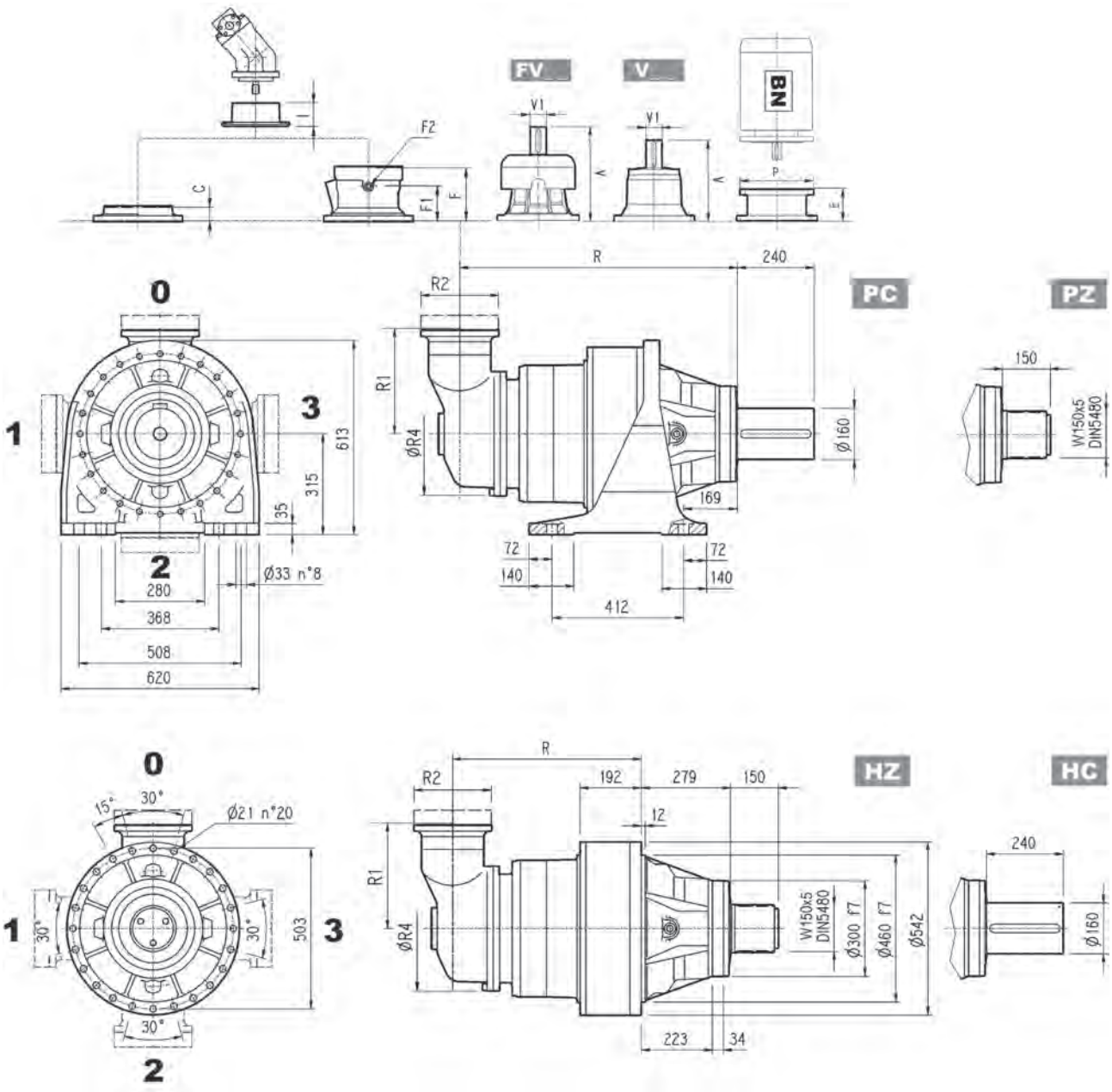

	R				R1	R2	R4	Kg			
	PC-PZ	HC-HZ	FZ - FZP	FP				PC-PZ	HC-HZ	FZ - FZP	FP
315 R3 (B)	890	611	611	611	345	292	400	720	590	500	550
315 R3 (C)	890	611	611	611	390	292	480	730	600	510	560
315 R4	917	638	638	638	225	245	345	680	550	460	510

	V	V1	Kg	V	V1	Kg	V	V1	Kg	V	V1	Kg	C	Input	I	F	F1	F2	Type	Input	Kg
315 R3 (B)	307	60	23	—	—	—	357	60	28	—	—	—	45	B		195	147	1/4 G	6	B	28
315 R3 (C)	307	60	23	—	—	—	357	60	28	—	—	—	45	B		195	147	1/4 G	6	B	28
315 R4	239	48	15	—	—	—	276	48	17	—	—	—	37	A	457	145	95	1/4 G	5	A	16

315 R

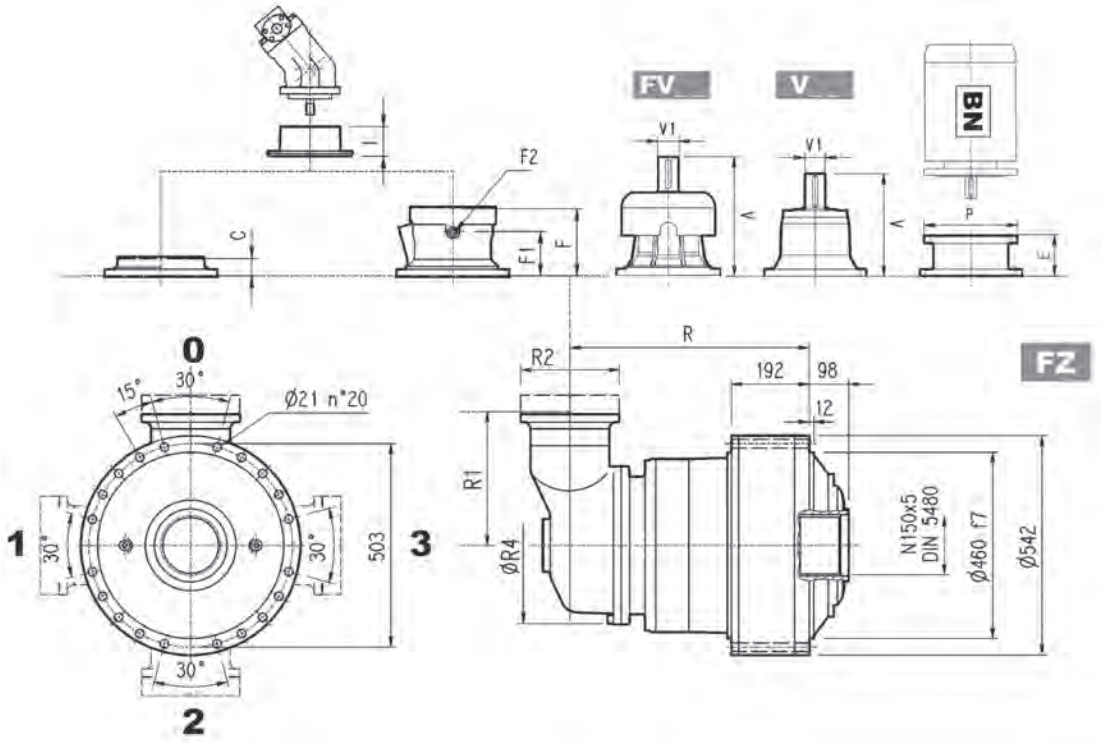

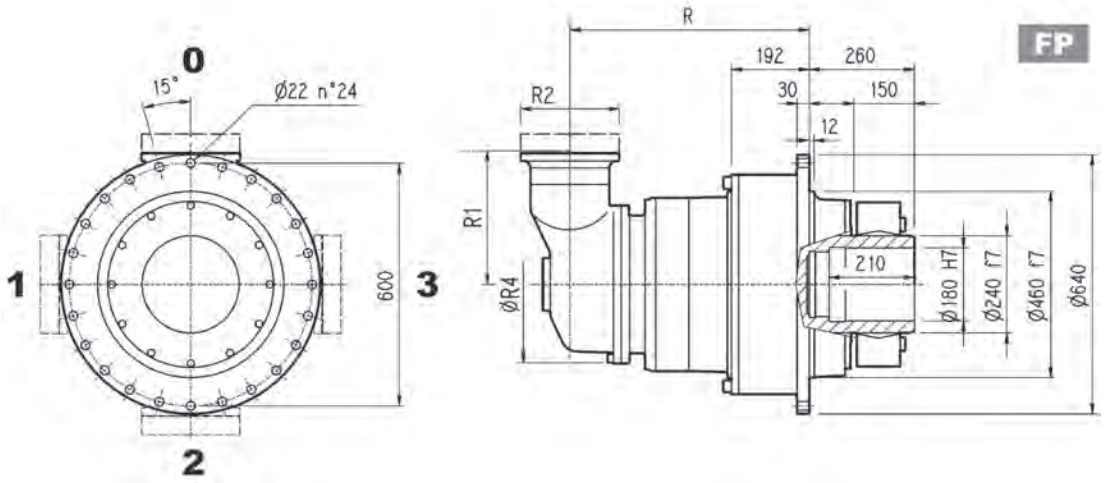

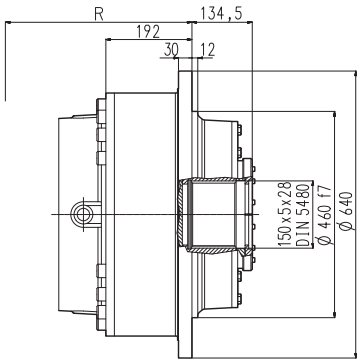

FP | M_{2max} = 135000 Nm

	P132		P160		P180		P200		P225		P250	
	E	P	E	P	E	P	E	P	E	P	E	P
315 R3 (B)	—	—	—	—	152	350	182	400	212	450	193	550
315 R3 (C)	—	—	—	—	152	350	182	400	212	450	193	550
315 R4	114	300	144	350	144	350	174	400	—	—	—	—

3/V 15 L3

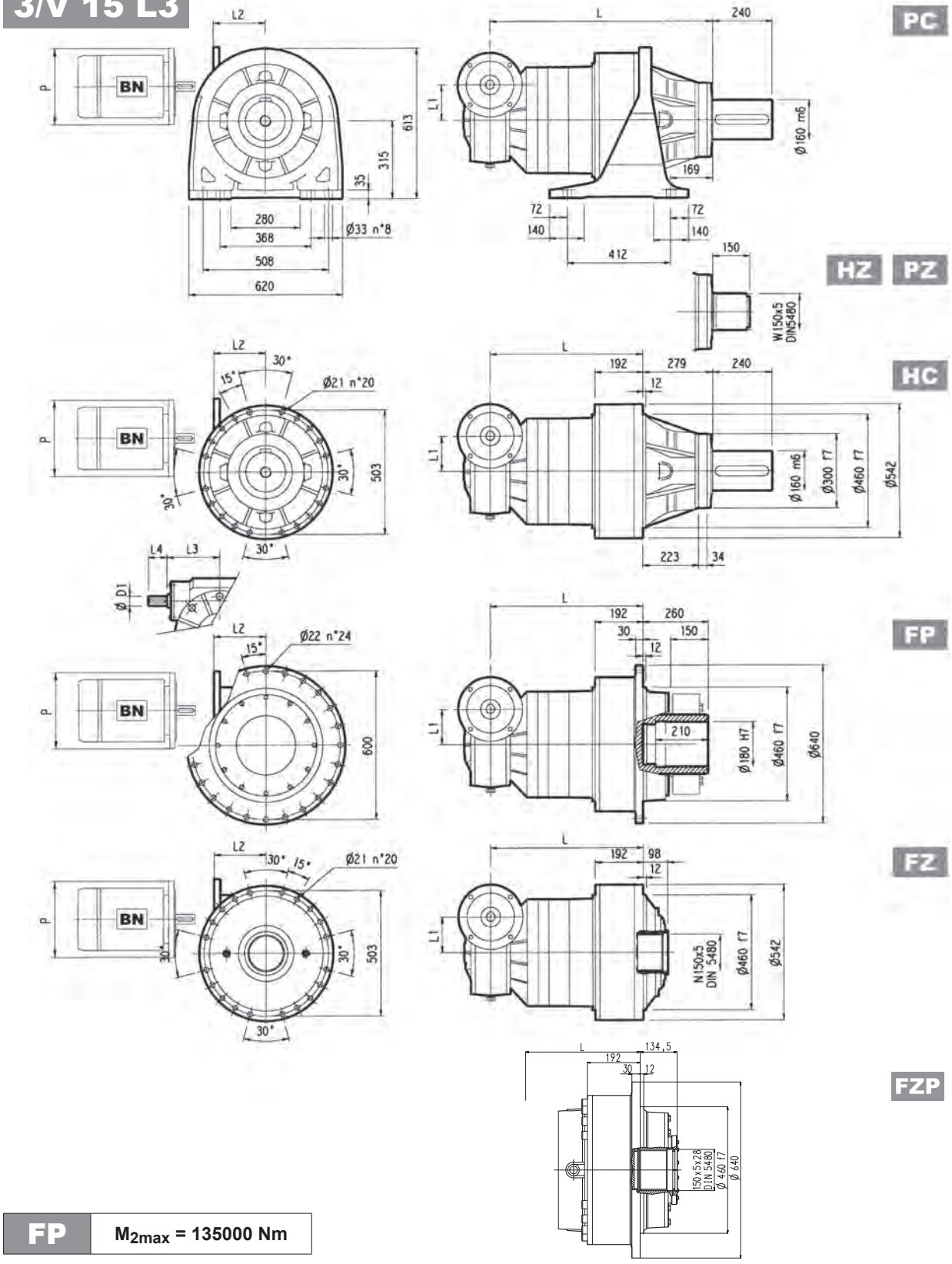

FP M_{2max} = 135000 Nm

	L				L1	L2	D1	L3	L4	Kg			
	PC - PZ	HC - HZ	FZ - FZP	FP						PC - PZ	HC - HZ	FZ - FZP	FP
3/V 15 L3	885	606	606	606	210	—	48	230	110	800	670	575	625

	P100	P112	P132		P160		P180		P200		P225	
	P	P	L2	P	L2	P	L2	P	L2	P	L2	P
3/V 15 L3	—	—	485	300	460	350	460	350	485	400	490	450

3/V 15 L4

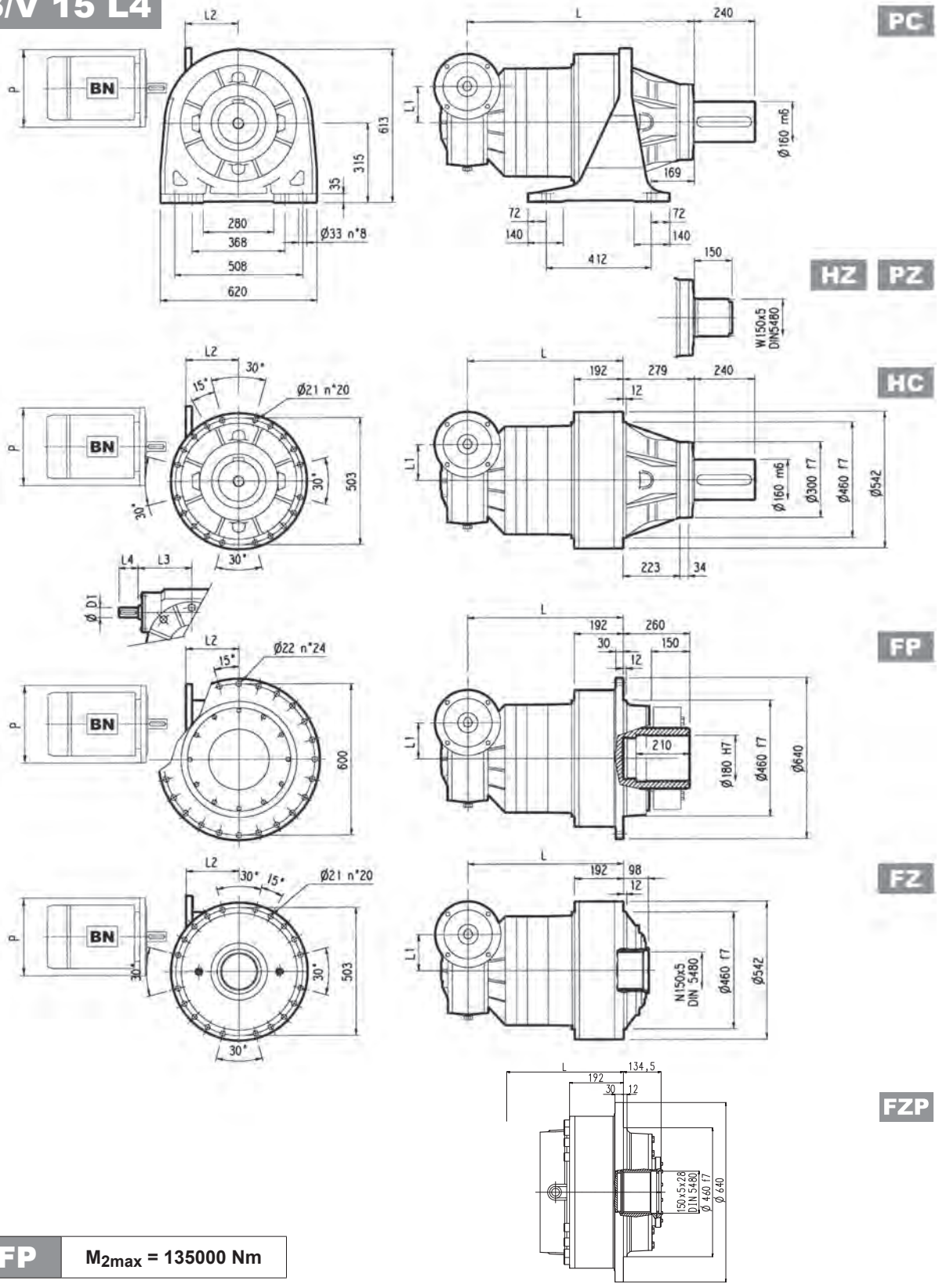

FP M_{2max} = 135000 Nm

	L				L1	L2	D1	L3	L4	Kg			
	PC - PZ	HC - HZ	FZ - FZP	FP						PC - PZ	HC - HZ	FZ - FZP	FP
3/V 15 L4	989	710	710	710	150	190	35	185	65	690	560	470	520

	P100	P112	P132		P160		P180		P200		P225	
	P	P	L2	P	L2	P	L2	P	L2	P	L2	P
3/V 15 L4	250	250	—	300	—	350	—	—	—	—	—	—

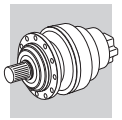

315 L | 315 R | 3/V 15 L

HC

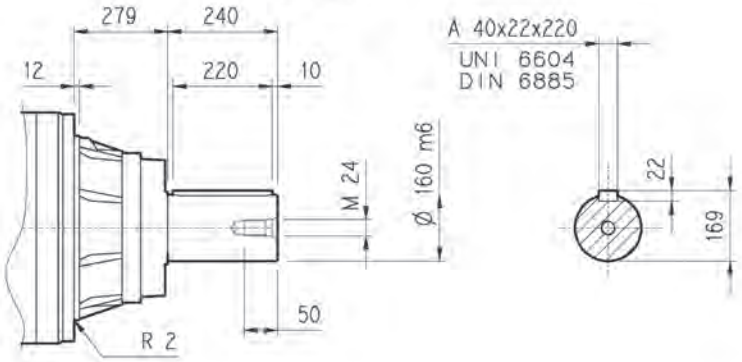

PC

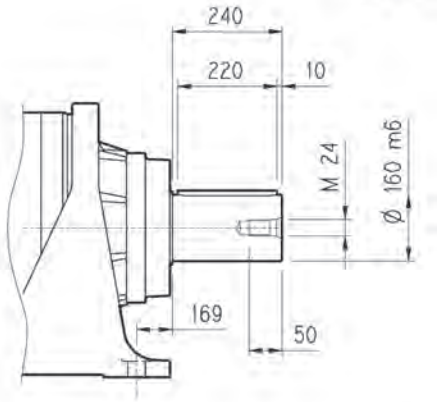

HZ

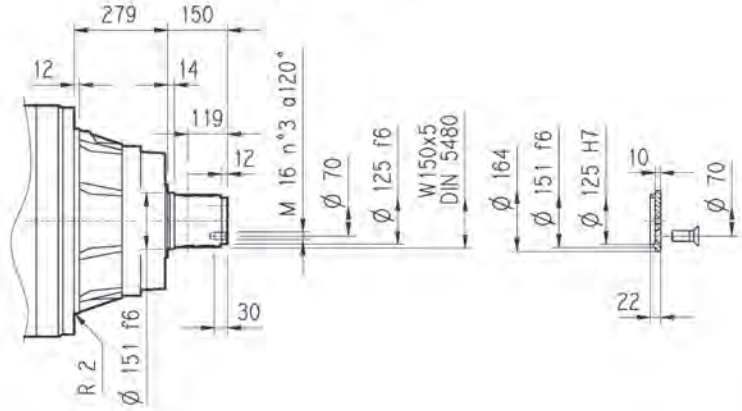

FZ

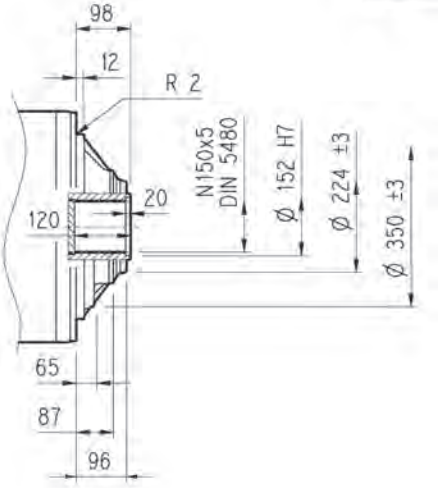

FP

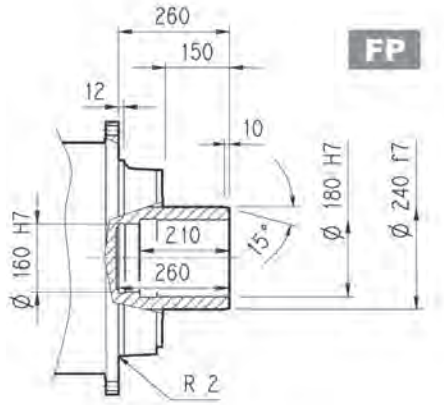

FZP

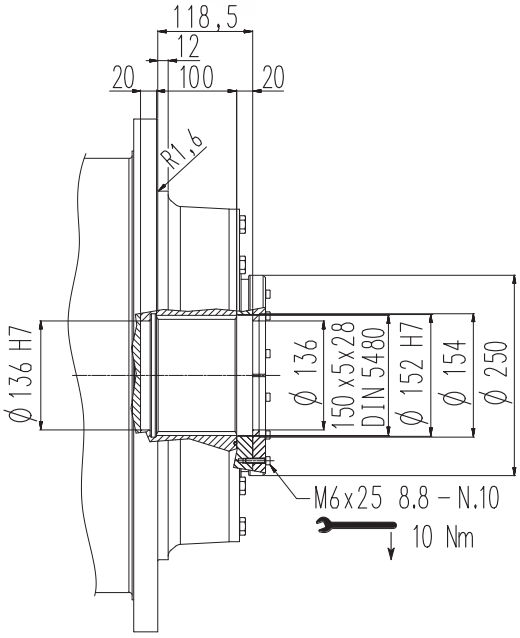

FP	M_{2max} = 135000 Nm

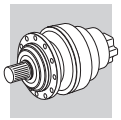

315 L | 315 R | 3/V 15 L

Flange

W0A

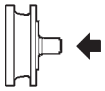

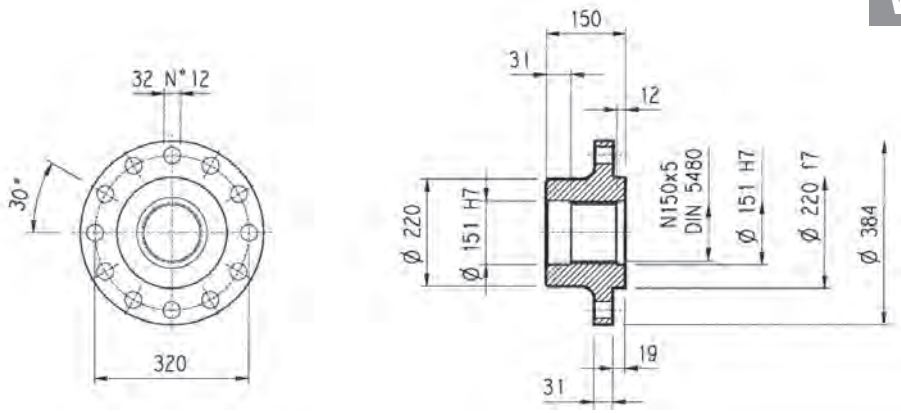

Material: Steel C40

Pinions

P...

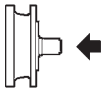

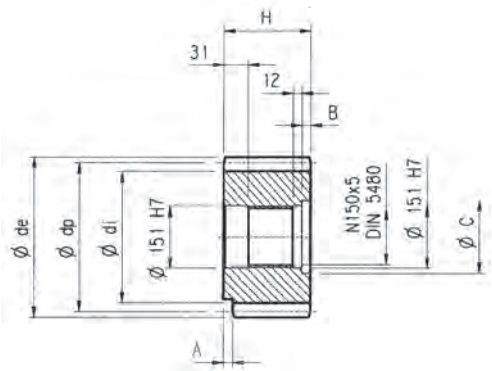

α = 20°

	m	z	x	dp	di	de	H	A	B	C	Material
PRG1	18	16	0.500	288	261	342	160	—	10	166	Steel 18NiCrMo5 case hardened
PRG2	18	16	0.617	288	271	339	150	30	—	—	Steel 39NiCrMo3 hardened and tempered

Sleeve coupling

M0A

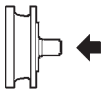

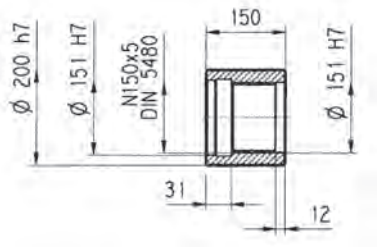

Material: Steel 16CrNi4

Splined bars

B0A

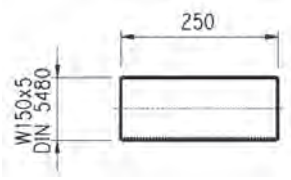

Material: Case hardening steel 18NiCrMo5 UNI 5331
must be case hardened 50-55 HRC

Shrink disc

G0A

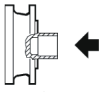

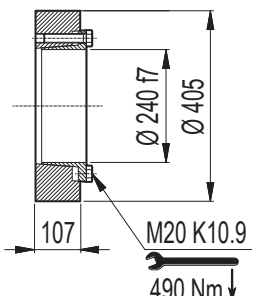

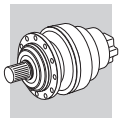

315 L 315 R

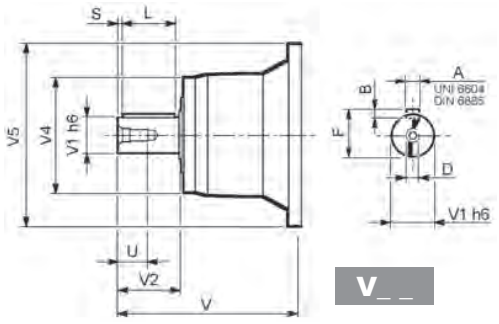

V_ _

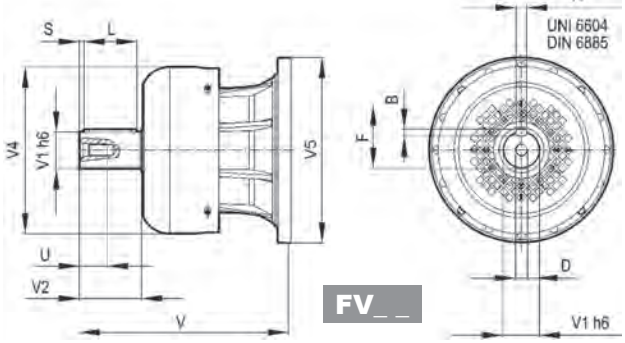

FV_ _

315 L1	**V15B**	523	120	210	320	542	32	18	127	180	15	M24	50
315 L2	**V11B**	348	80	130	200	418	22	14	85	110	10	M16	36
	FV11B	456	80	130	347.5	428	22	14	85	110	10	M16	36
315 L3	**V07B**	315	80	130	200	345	22	14	85	110	10	M16	36
	FV07B	375	80	130	347.5	348	22	14	85	110	10	M16	36
	V07A	313	60	105	155	345	18	11	64	90	7.5	M16	36
	FV07A	363	60	105	309	348	18	11	64	90	7.5	M16	36
315 L4	**V05B**	239	48	82	155	245	14	9	51.5	70	6	M16	36
	FV05B	276	48	82	219.5	244	14	9	51.5	70	6	M16	36
315 R3 (B) (C)	**V06B**	307	60	105	155	292	18	11	64	90	7.5	M16	36
	FV06B	357	60	105	309	292	18	11	64	90	7.5	M16	36
315 R4	**V05B**	239	48	82	155	245	14	9	51.5	70	6	M16	36
	FV05B	276	48	82	219.5	244	14	9	51.5	70	6	M16	36

315 L 315 R

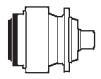

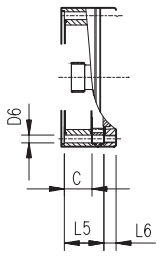

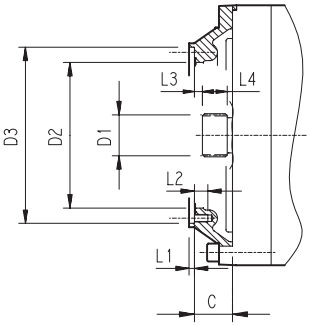

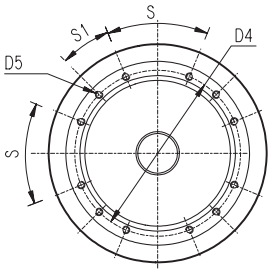

		C	D1	D2	D3	D4	D5	D6	L1	L2	L3	L4	L5	L6	S	S1	Input
315 L1	**V9AE**	116	100x94 DIN 5482	340	412 H7	390	M16 n°18	—	7	30	8	55	—	—	20°	20°	E
315 L2	**V9AD**	81	80x74 DIN 5482	270	335 H7	314	M16 n°8	—	5	30	8.5	40	—	—	60°	30°	D
315 L3	**V9AB**	51	58x53 DIN 5482	195	236 H7	222	M10 n°12	—	4	18	11	22	—	—	45°	22.5°	B
315 L4	**V9AA**	37	40x36 DIN 5482	140	178 H7	165	M10 n°8	—	4	18	9	18	—	—	45°	45°	A
315 R4	**V9AA**	37	40x36 DIN 5482	140	178 H7	165	M10 n°8	11	4	18	9	18	—	—	45°	45°	A
315 R3 (B) (C)	**V9AB**	45	58x53 DIN 5482	195	236 H7	222	M10 n°12	—	4	18	11	22	—	—	45°	22.5°	B

3/V 15 L

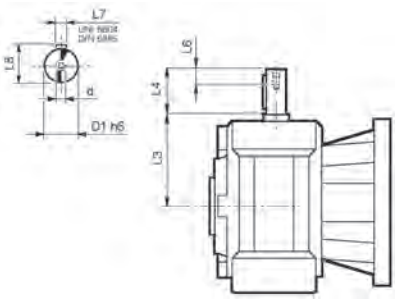

	D1 h6	L3	L4	L6	L7	L8	d
3/V 15 L3_HS	48	230	110	40	14	51.5	M16
3/V 15 L4_HS	35	185	65	20	10	38	M8

Bonfiglioli Riduttori

315 L | 315 R | 3/V 15 L

Permissible radial and axial loads on output shaft with $Fh_2 : n_2 \cdot h = 100000$

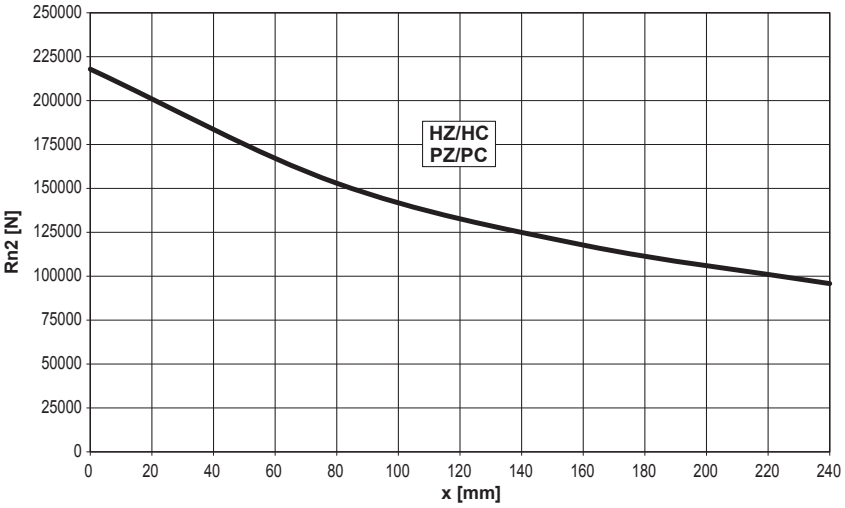

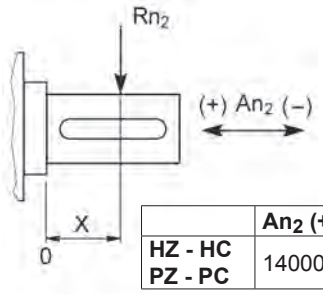

	An_2 (+)	An_2 (-)
HZ - HC PZ - PC	140000	105000

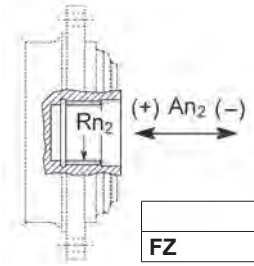

	Rn_2	An_2 (+/-)
FZ	41774	41774

Load corrective factor fh_2 on shafts	$Fh_2 = n_2 \cdot h$	10000	25000	50000	100000	500000	1000000
	FZ	**2.15**	**1.59**	**1.26**	**1.00**	**0.58**	**0.46**
	HZ - HC - PZ - PC	**2.00**	**1.52**	**1.23**	**1.00**	**0.62**	**0.50**

Permissible radial loads on input shaft with $Fh_1 : n_1 \cdot h = 250000$

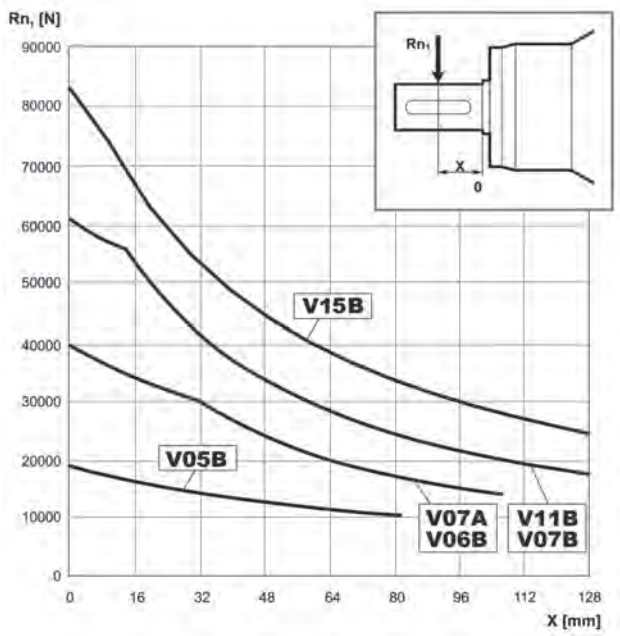

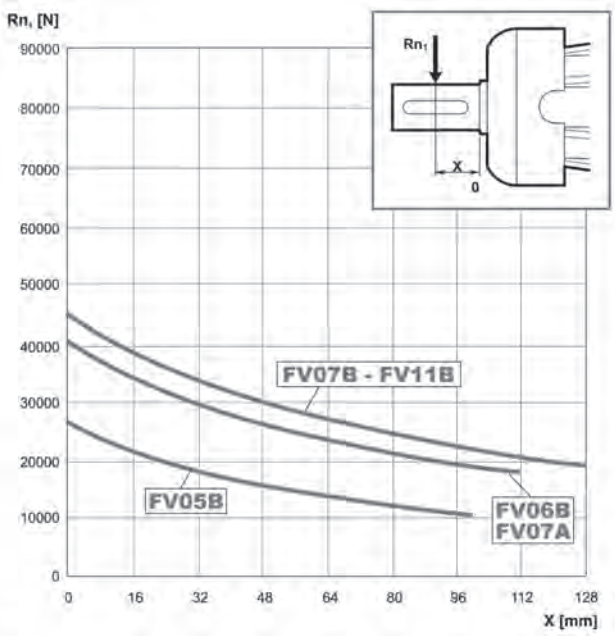

Load corrective factor fh_1 on shafts	$Fh_1 = n_1 \cdot h$	250000	500000	1000000	2000000	5000000	10000000
	fh_1	**1**	**0.79**	**0.63**	**0.50**	**0.37**	**0.29**

315 VK

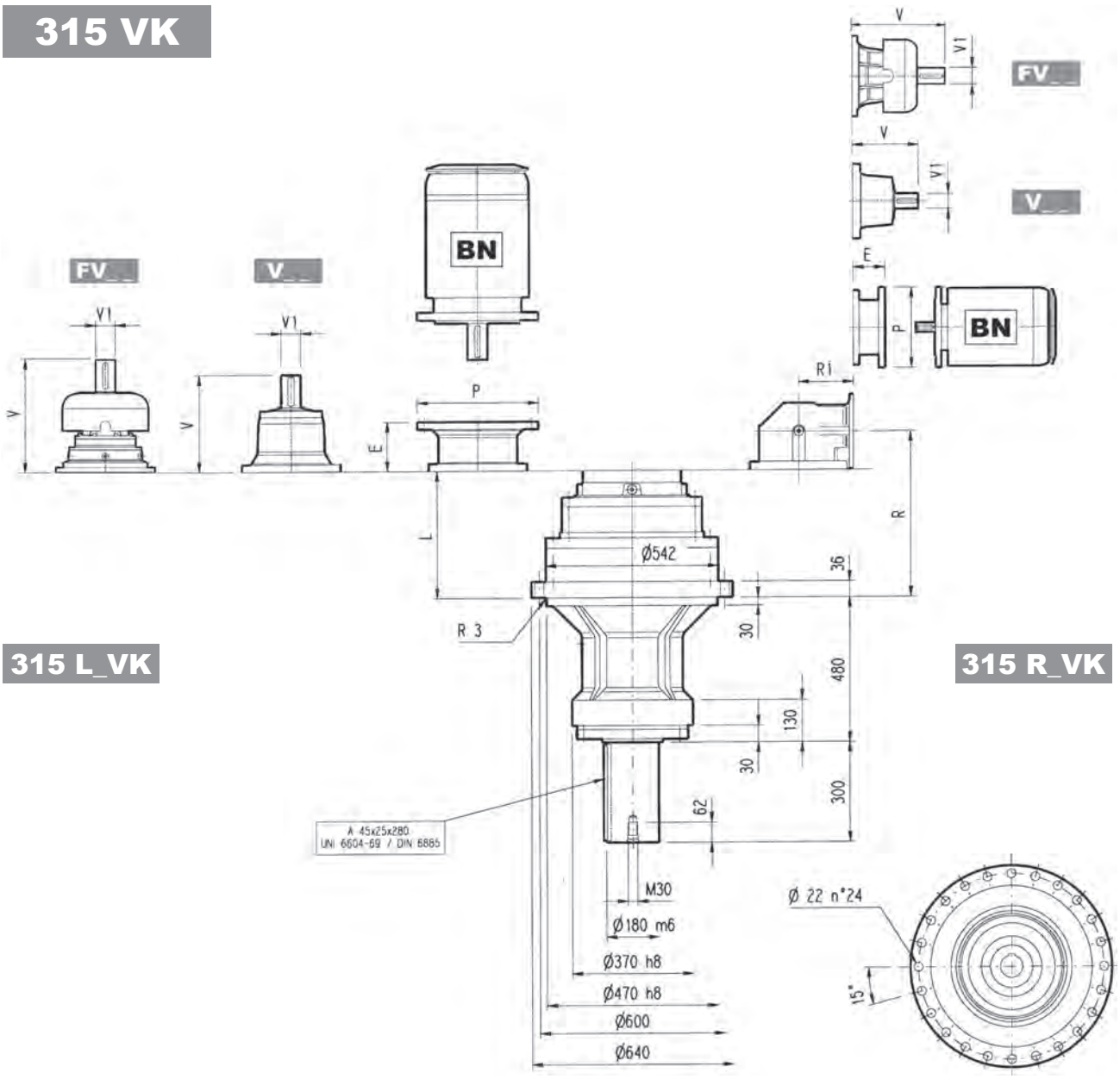

315 L_VK

315 R_VK

	L	Kg	V	V1	Kg	V	V1	Kg	V	V1	Kg	V	V1	Kg	P132		P160		P180		P200		P225		P250	
															E	P	E	P	E	P	E	P	E	P	E	P
315 L2	386	650	348	80	55	—	—	—	456	80	85	—	—	—	—	—	—	—	—	—	—	—	—	—	—	—
315 L3	519	700	315	80	35	313	60	28	375	80	48	363	60	34	—	—	—	—	195	350	186	400	216	450	215	550
315 L4	608	710	239	48	15	—	—	—	276	48	17	—	—	—	114	300	144	350	144	350	174	400	—	—	—	—

	R	R1	Kg	V	V1	Kg	V	V1	Kg	V	V1	Kg	V	V1	Kg	P132		P160		P180		P200		P225		P250	
																E	P	E	P	E	P	E	P	E	P	E	P
315 R3 (B)	611	345	720	307	60	23	—	—	—	357	60	28	—	—	—	—	—	—	—	152	350	182	400	212	450	193	550
315 R3 (C)	611	390	730	307	60	23	—	—	—	357	60	28	—	—	—		—	—	—	152	350	182	400	212	450	193	550
315 R4	638	225	690	239	48	15	—	—	—	276	48	17	—	—	—	114	300	144	350	144	350	174	400	—	—	—	—

315 VK

The diagram below allows the calculation of permitted overhung load R_{x2} on the output shaft of gearbox, with radial force applying at a distance x from shaft shoulder.
The curves are relevant to value resulting from the relationship of trust load A_{n2} to radial load R_{n2}, based on n_2 = 10 min^{-1} and 10000 hrs theoretical lifetime.

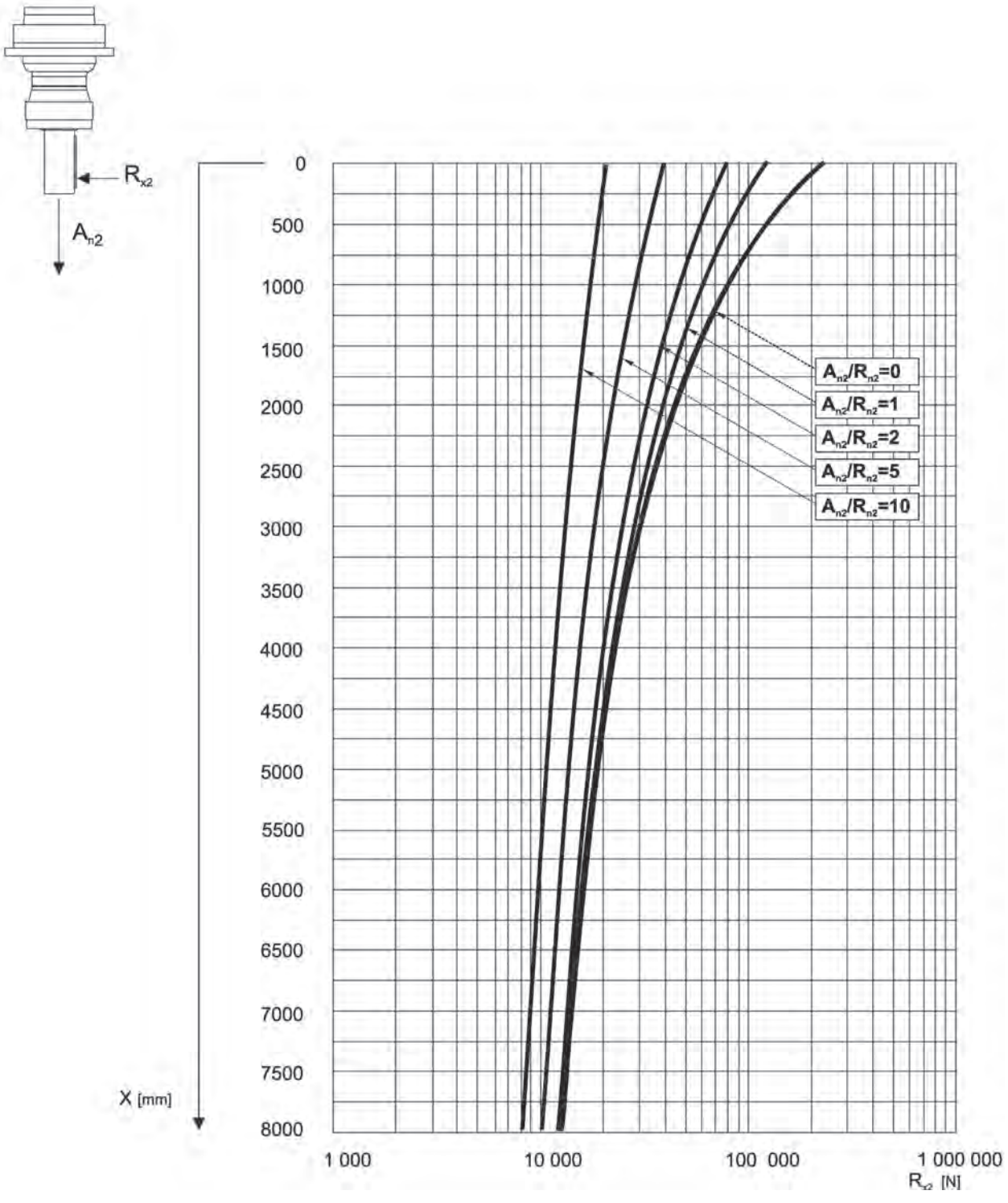

316 L

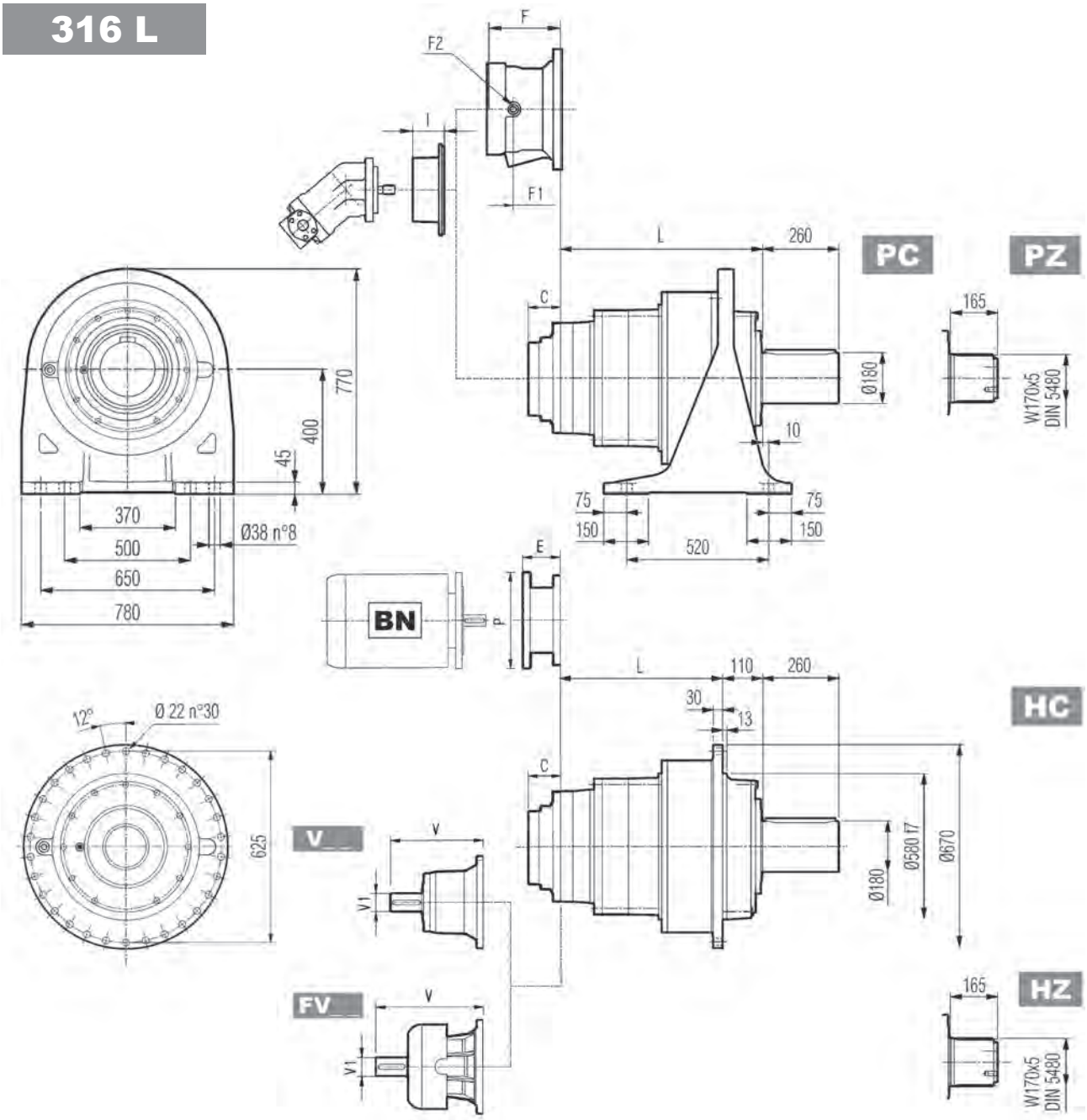

	L				Kg			
	PC - PZ	HC - HZ	FZ - FZP	FP	PC - PZ	HC - HZ	FZ - FZP	FP
316 L1	289	179	179	179	700	500	430	450
316 L2	541	431	431	431	790	590	520	540
316 L3	674	564	564	564	840	640	570	590
316 L4	763	653	653	653	860	660	590	610

	V	V1	Kg	V	V1	Kg	V	V1	Kg	V	V1	Kg	C	Input	I	F	F1	F2	Type	Input	Kg
316 L1	—	—	—	—	—	—	—	—	—	—	—	—	156	E		—	—	—	—	—	—
316 L2	348	80	55	—	—	—	456	80	85	—	—	—	81	D		—	—	—	—	—	—
316 L3	315	80	35	313	60	28	375	80	48	363	60	34	51	B	457	201	153	1/4 G	6	B	28
316 L4	239	48	15	—	—	—	276	48	17	—	—	—	37	A		145	95	1/4 G	5	A	16

316 L

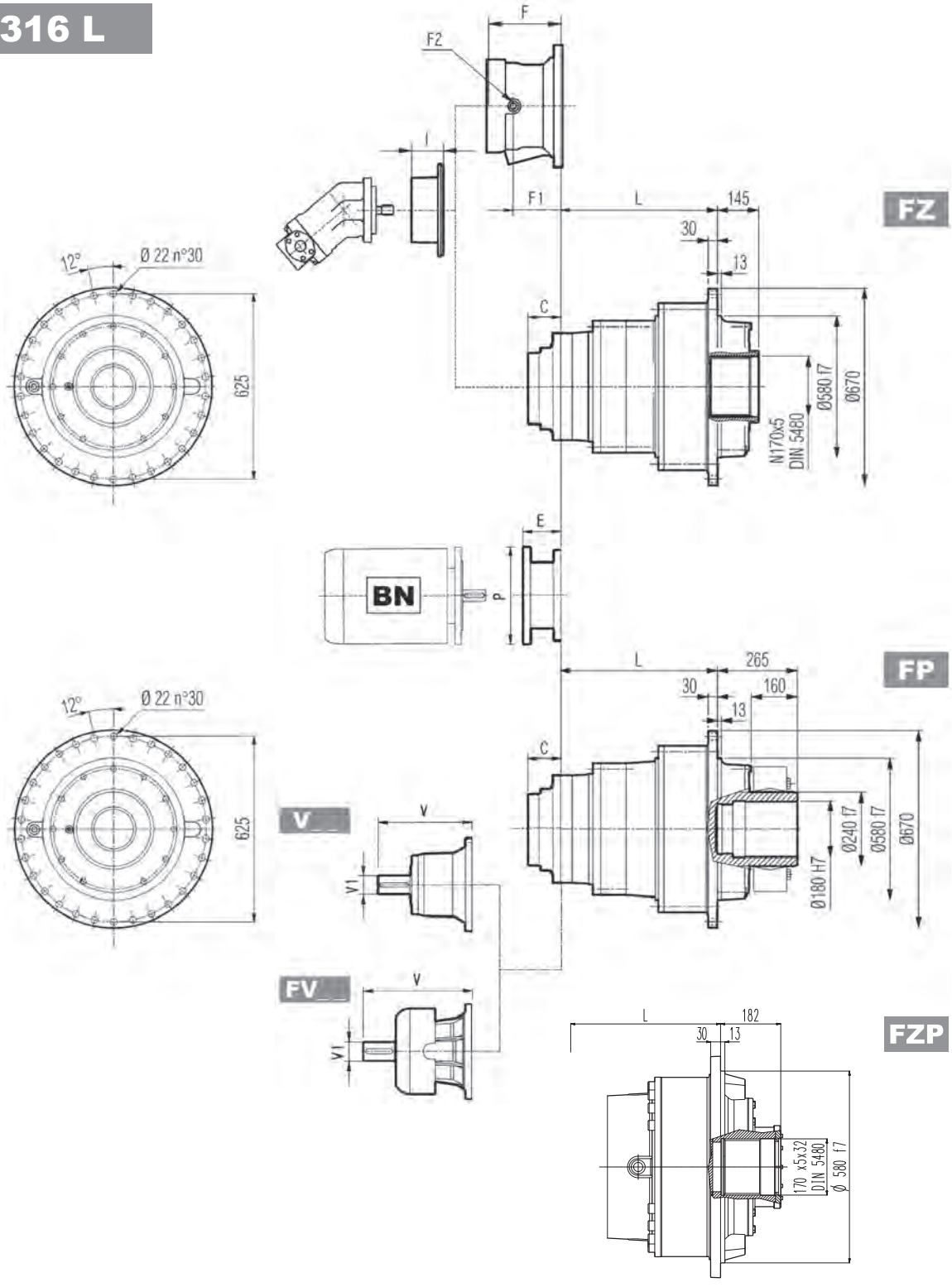

FP M_{2max} = 178000 Nm

	P132		P160		P180		P200		P225		P250	
	E	P	E	P	E	P	E	P	E	P	E	P
316 L2	—	—	—	—	—	—	267	400	297	450	297	550
316 L3	—	—	—	—	195	350	186	400	216	450	215	550
316 L4	114	300	144	350	144	350	174	400	—	—	—	—

316 R

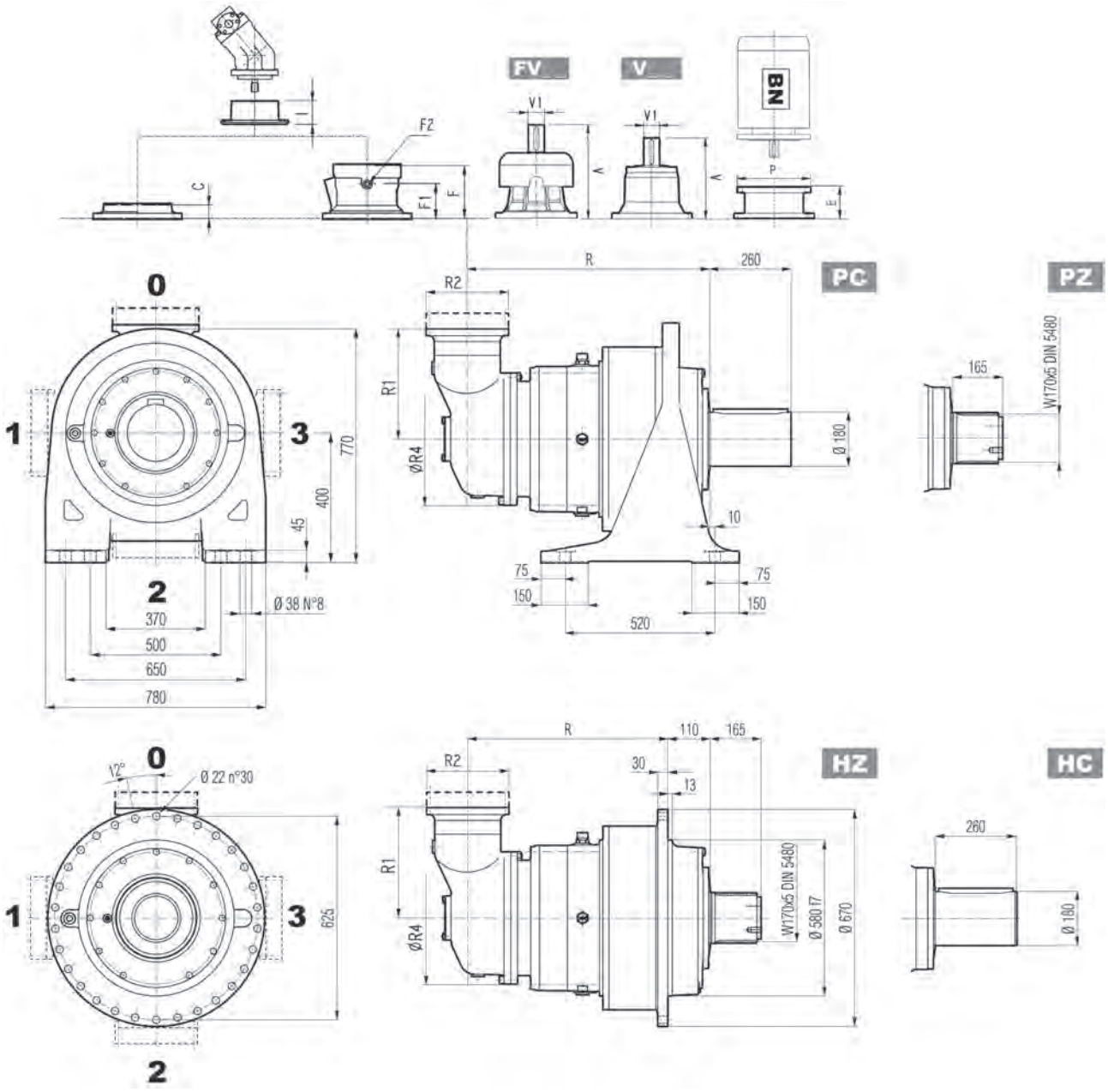

	R				R1	R2	R4	Kg			
	PC-PZ	HC-HZ	FZ - FZP	FP				PC-PZ	HC-HZ	FZ - FZP	FP
316 R3 (B)	766	656	656	656	345	292	400	910	710	640	660
316 R3 (C)	766	656	656	656	390	292	480	920	720	650	670
316 R4	793	683	683	683	225	245	345	890	690	620	640

	V	V1	Kg	V	V1	Kg	V	V1	Kg	V	V1	Kg	C	Input	I	F	F1	F2	Type	Input	Kg
316 R3 (B)	307	60	23	—	—	—	357	60	28	—	—	—	45	B		195	147	1/4 G	6	B	28
316 R3 (C)	307	60	23	—	—	—	357	60	28	—	—	—	45	B		195	147	1/4 G	6	B	28
316 R4	239	48	15	—	—	—	276	48	17	—	—	—	37	A	457	145	95	1/4 G	5	A	16

316 R

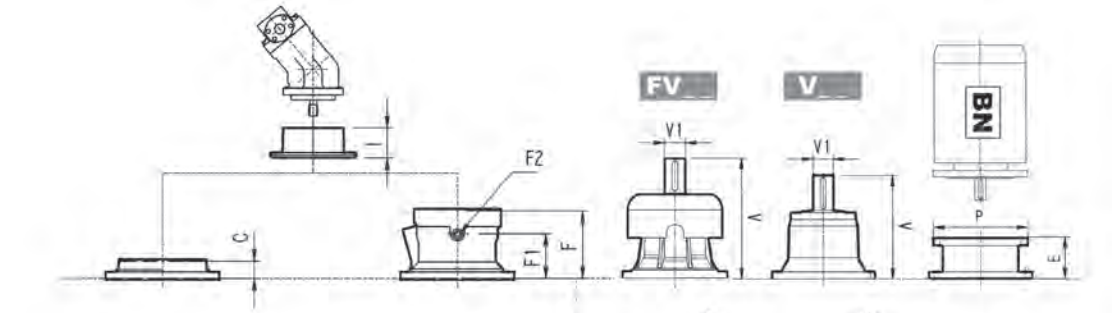

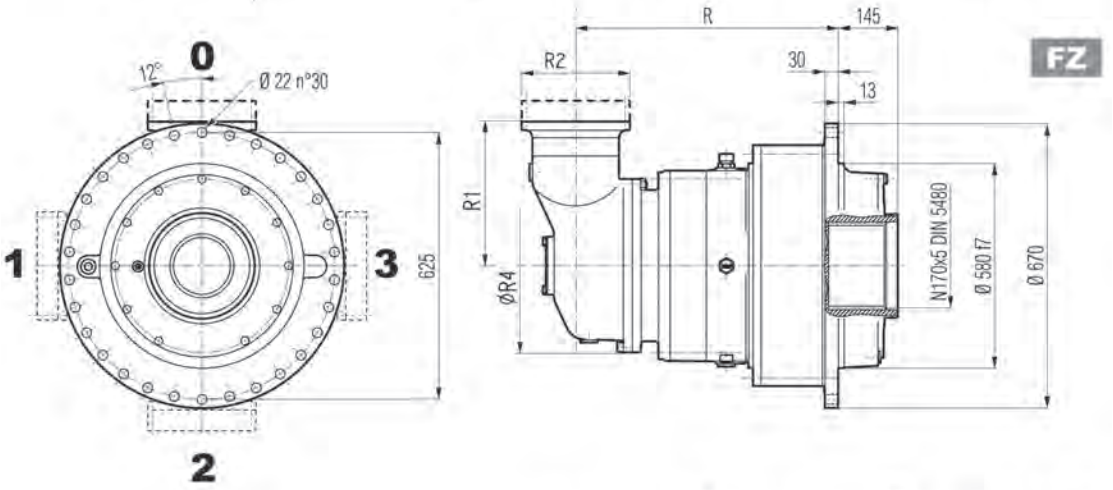

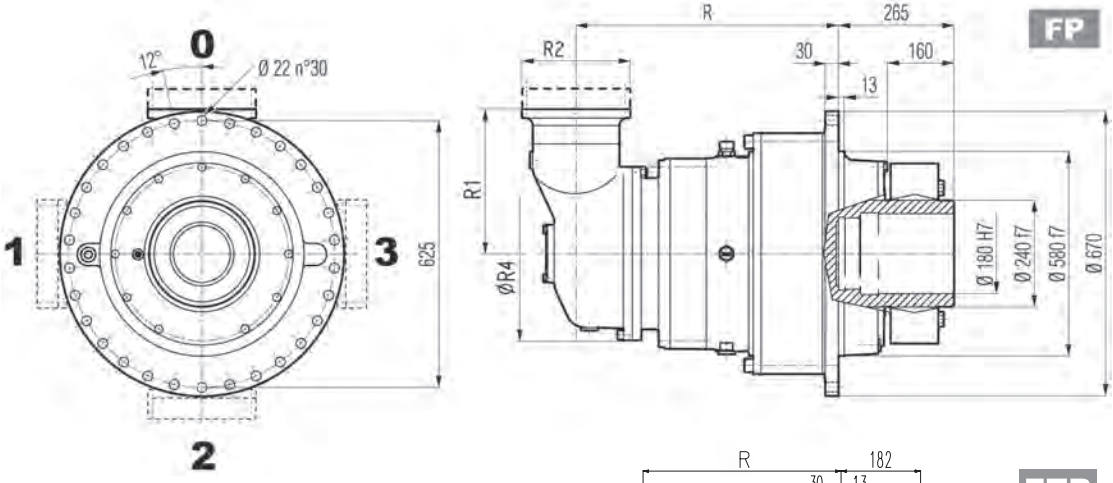

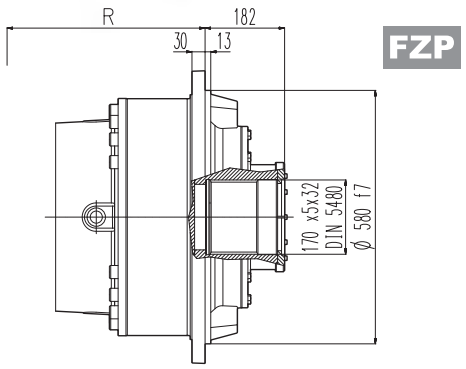

FP M_{2max} = 178000 Nm

	P132		P160		P180		P200		P225		P250	
	E	P	E	P	E	P	E	P	E	P	E	P
316 R3 (B)	—	—	—	—	152	350	182	400	212	450	193	550
316 R3 (C)	—	—	—	—	152	350	182	400	212	450	193	550
316 R4	114	300	144	350	144	350	174	400	—	—	—	—

3/V 16 L3

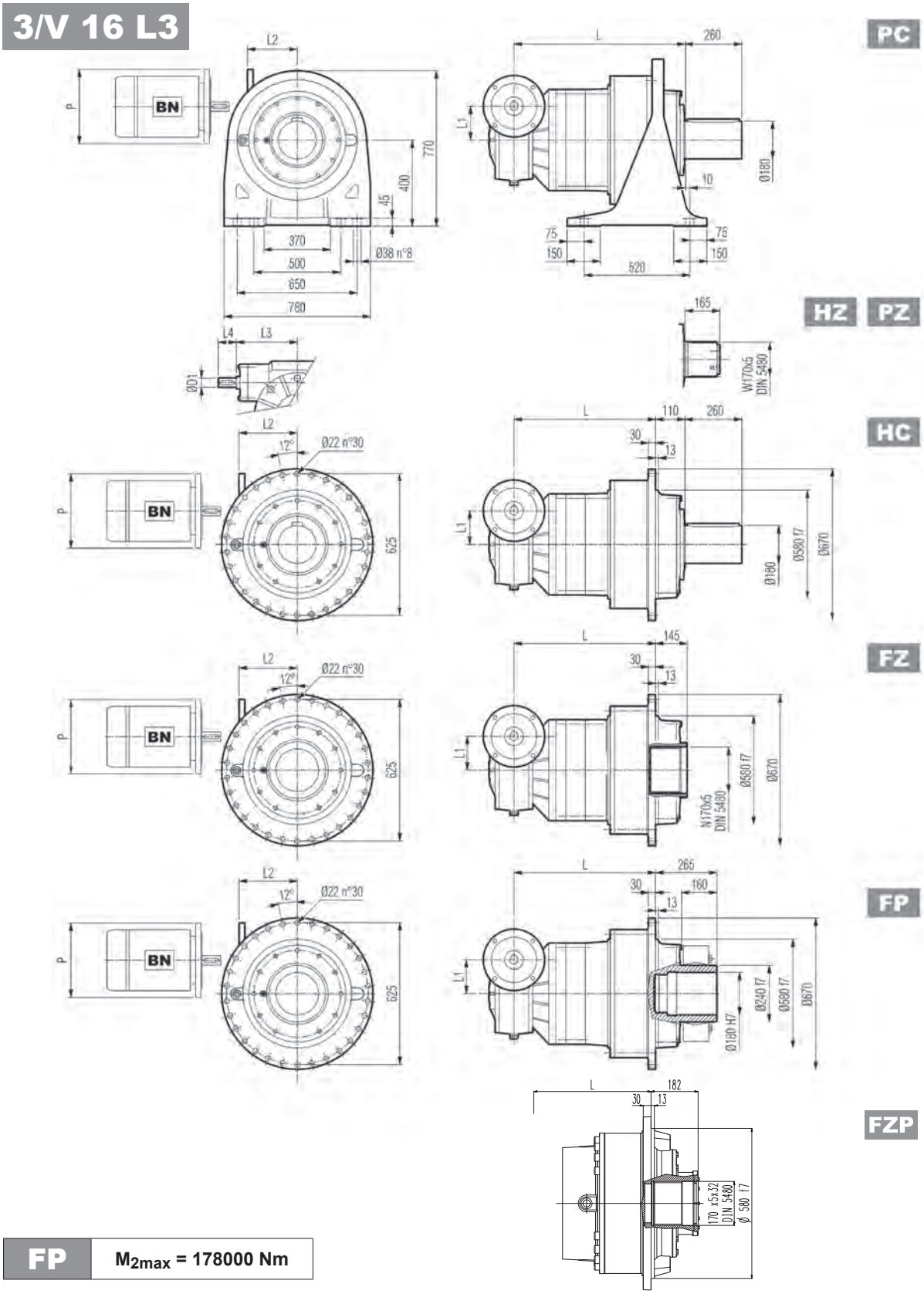

FP | **M_{2max} = 178000 Nm**

	L				L1	D1	L3	L4	Kg			
	PC - PZ	HC - HZ	FZ - FZP	FP					PC - PZ	HC - HZ	FZ - FZP	FP
3/V 16 L3	812	702	702	702	250	55	274	110	1100	900	830	850

	P132		P160		P180		P200		P225	
	L2	P	L2	P	L2	P	L2	P	L2	P
3/V 16 L3	531	300	506	350	506	350	531	400	536	450

3/V 16 L4

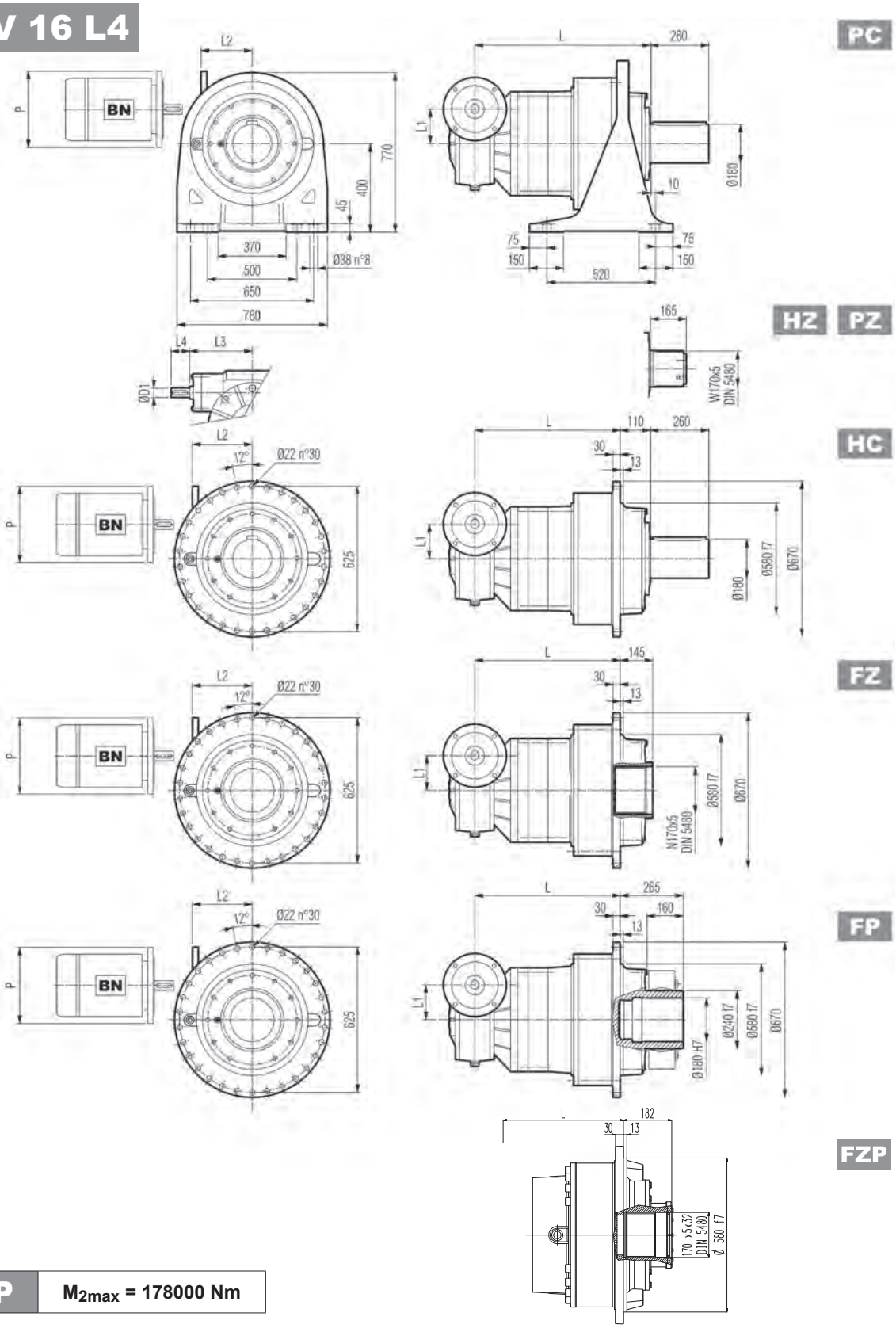

FP M_{2max} = 178000 Nm

	L				L1	D1	L3	L4	Kg			
	PC - PZ	HC - HZ	FZ	FP					PC - PZ	HC - HZ	FZ	FP
3/V 16 L4	865	755	755	755	150	35	185	65	900	700	630	650

	P100		P112		P132		P160	
	L2	P	L2	P	L2	P	L2	P
3/V 16 L4	190	250	190	250	190	300	190	350

316 L | 316 R | 3/V 16 L

HC

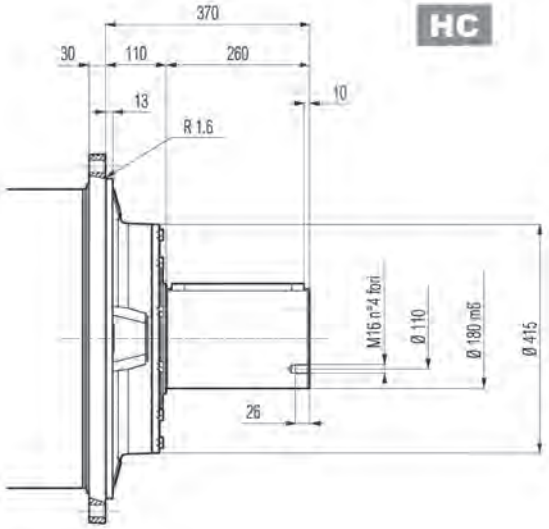

PC

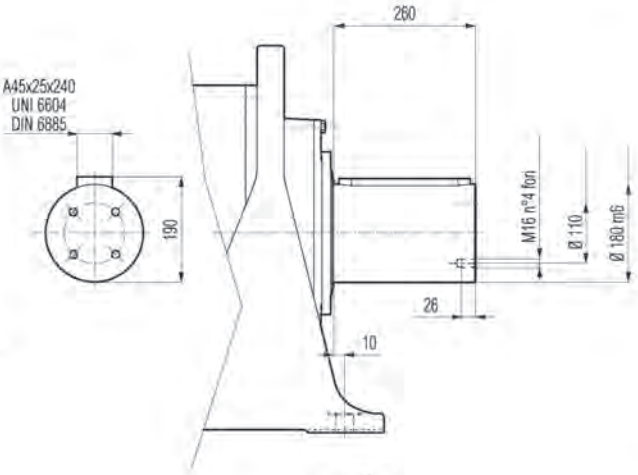

HZ

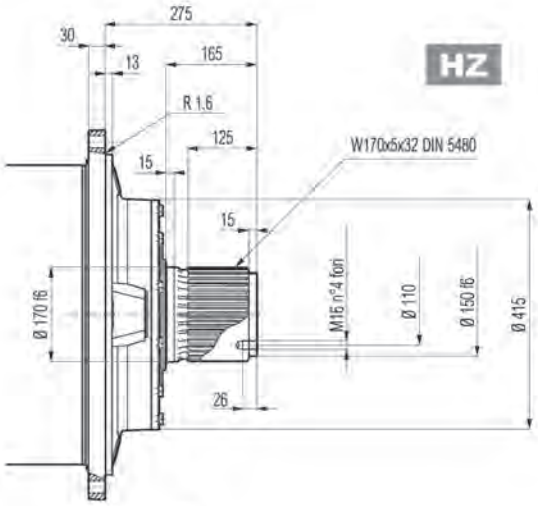

FZ

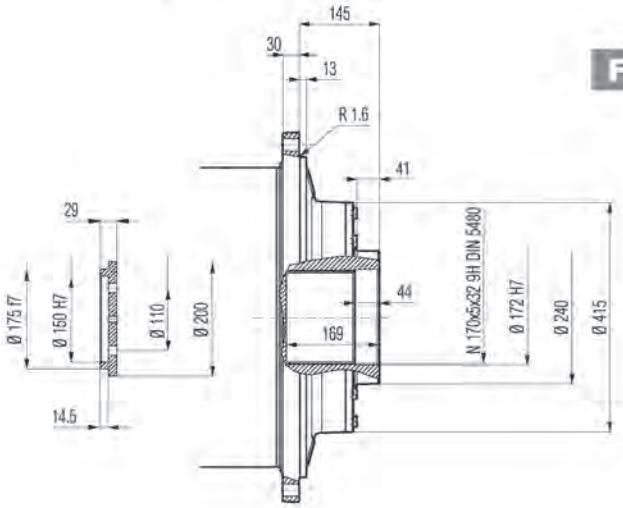

FP

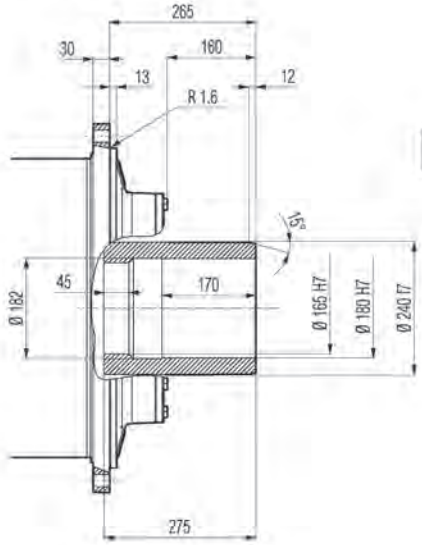

FZP

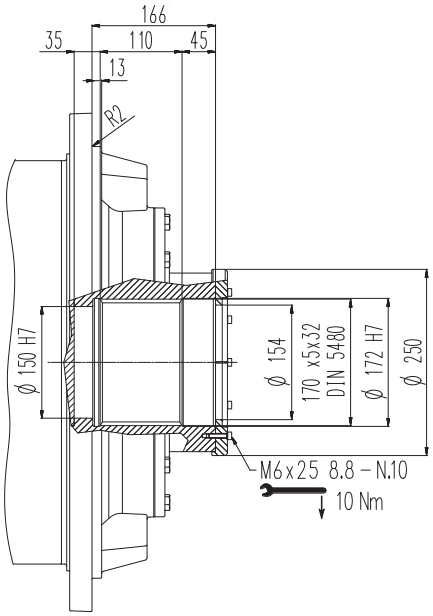

FP	M_{2max} = 178000 Nm

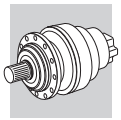

316 L | 316 R | 3/V 16 L

Flange

W0A

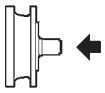

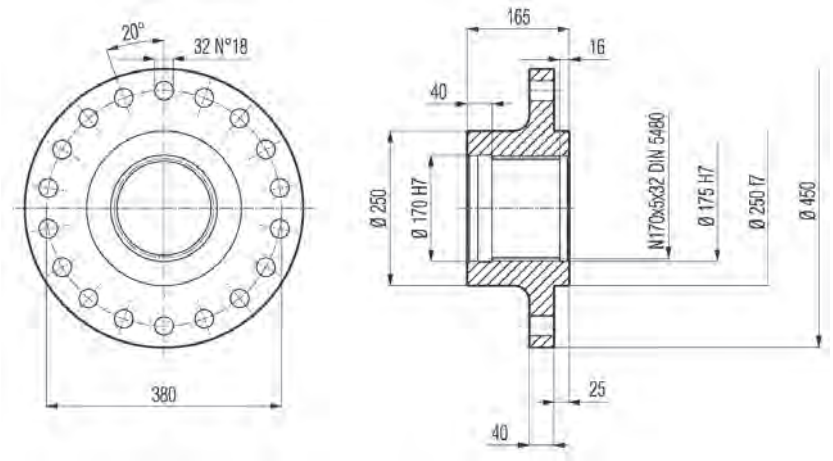

Material: Steel C40

Sleeve coupling

M0A

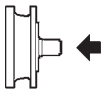

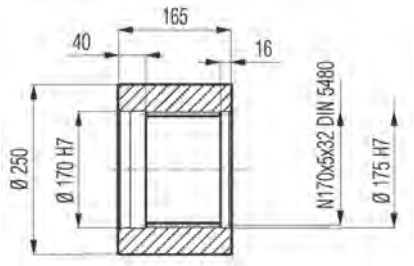

Material: Steel C40

Splined bars

B0A

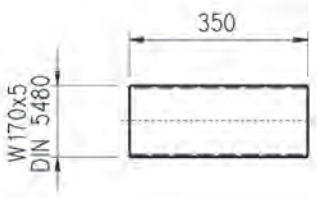

Material: Case hardening steel 18NiCrMo5 UNI 5331
must be case hardened 50-55 HRC

Shrink disc

G0A

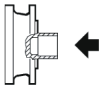

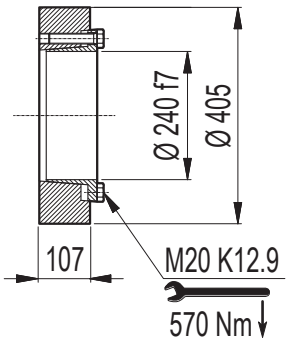

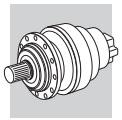

316 L 316 R

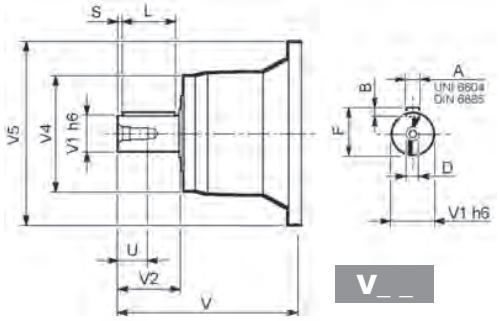

V_ _

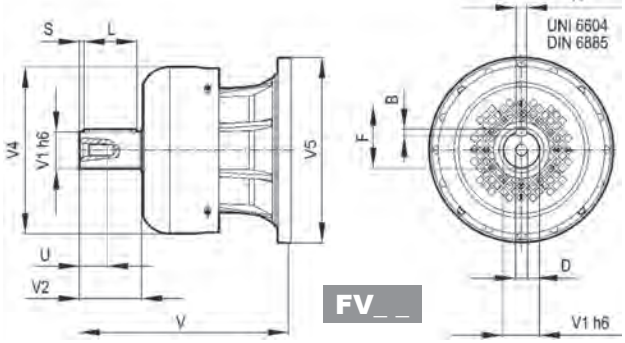

FV_ _

		V	V1	V2	V4	V5	A	B	F	L	S	D	U
316 L2	V11B	348	80	130	200	418	22	14	85	110	10	M16	36
	FV11B	456	80	130	347.5	428	22	14	85	110	10	M16	36
316 L3	V07B	315	80	130	200	345	22	14	85	110	10	M16	36
	FV07B	375	80	130	347.5	348	22	14	85	110	10	M16	36
	V07A	313	60	105	155	345	18	11	64	90	7.5	M16	36
	FV07A	363	60	105	309	348	18	11	64	90	7.5	M16	36
316 L4	V05B	239	48	82	155	245	14	9	51.5	70	6	M16	36
	FV05B	276	48	82	219.5	244	14	9	51.5	70	6	M16	36
316 R3 (B) (C)	V06B	307	60	105	155	292	18	11	64	90	7.5	M16	36
	FV06B	357	60	105	309	292	18	11	64	90	7.5	M16	36
316 R4	V05B	239	48	82	155	245	14	9	51.5	70	6	M16	36
	FV05B	276	48	82	219.5	244	14	9	51.5	70	6	M16	36

316 L 316 R

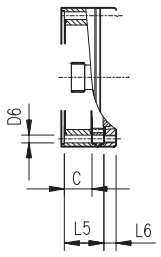

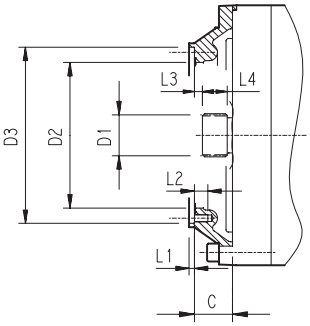

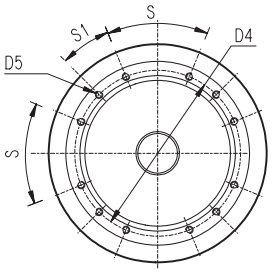

		C	D1	D2	D3	D4	D5	D6	L1	L2	L3	L4	L5	L6	S	S1	Input
316 L1	V9AE	116	100x94 DIN 5482	340	412 H7	390	M16 n° 18	—	7	30	8	55	—	—	20°	20°	E
316 L2	V9AD	81	80x74 DIN 5482	270	335 H7	314	M16 n° 8	—	5	30	8.5	40	—	—	60°	30°	D
316 L3	V9AB	51	58x53 DIN 5482	195	236 H7	222	M10 n° 12	—	4	18	11	22	—	—	45°	22.5°	B
316 L4	V9AA	37	40x36 DIN 5482	140	178 H7	165	M10 n° 8	—	4	18	9	18	—	—	45°	45°	A
316 R3 (B) (C)	V9AB	45	58x53 DIN 5482	195	236 H7	222	M10° 12	—	4	18	11	22	—	—	45°	22.5°	B
316 R4	V9AA	37	40x36 DIN 5482	140	178 H7	165	M10 n° 8	11	4	18	9	18	—	—	45°	45°	A

3/V 16 L

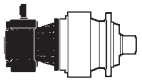

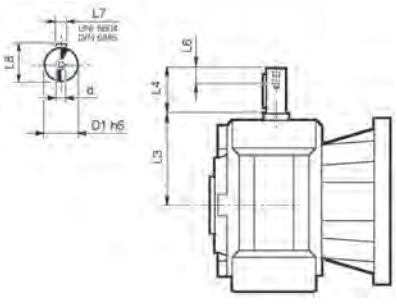

	D1 h6	L3	L4	L6	L7	L8	d
3/V 16 L3_HS	55	274	110	40	16	59	M16
3/V 16 L4_HS	35	185	65	20	10	38	M8

Bonfiglioli Riduttori

Permissible radial and axial loads on output shaft with $Fh_2 : n_2 \cdot h = 100000$

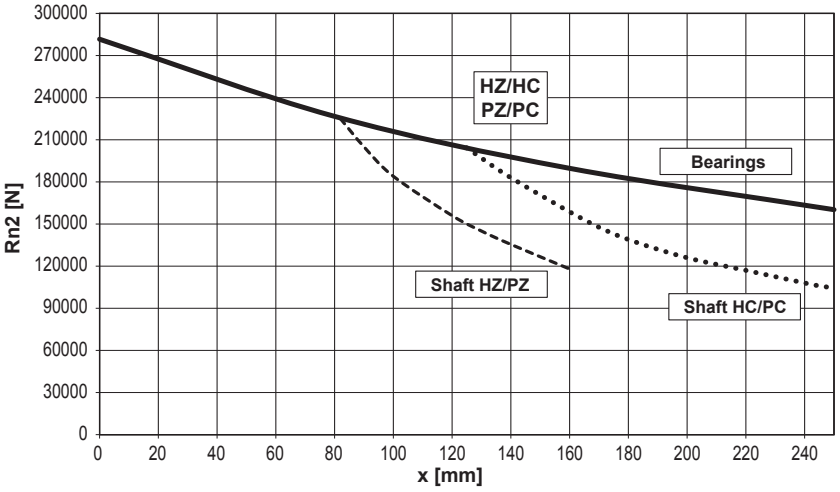

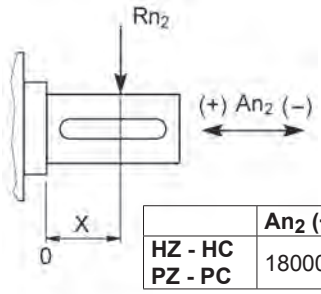

	An2 (+)	An2 (-)
HZ - HC PZ - PC	180000	150000

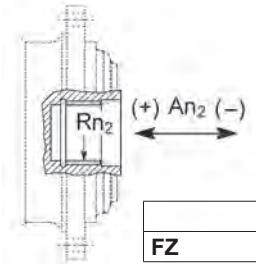

	Rn2	An2 (+/-)
FZ	69624	69624

	Fh2 = n2 · h	10000	25000	50000	100000	500000	1000000
Load corrective factor fh2 on shafts	FZ	2.15	1.59	1.26	1.00	0.58	0.46
	fh2 HC - PC	1.16	1.00	1.00	1.00	0.62	0.50
	HZ - PZ	1.19	1.02	1.02	1.00	0.62	0.50

Permissible radial loads on input shaft with $Fh_1 : n_1 \cdot h = 250000$

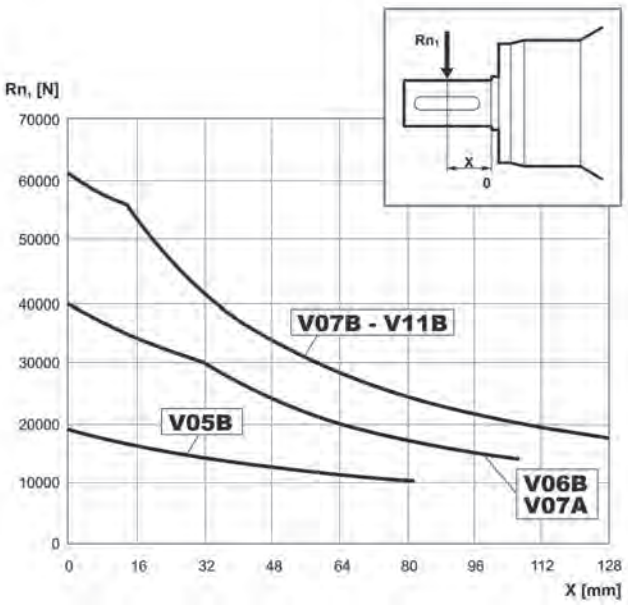

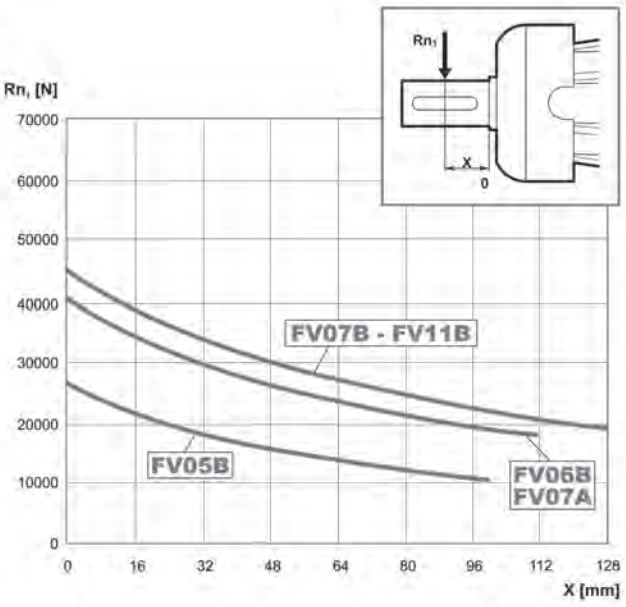

	Fh1 = n1 · h	250000	500000	1000000	2000000	5000000	10000000
Load corrective factor fh1 on shafts	fh1	1	0.79	0.63	0.50	0.37	0.29

317 L

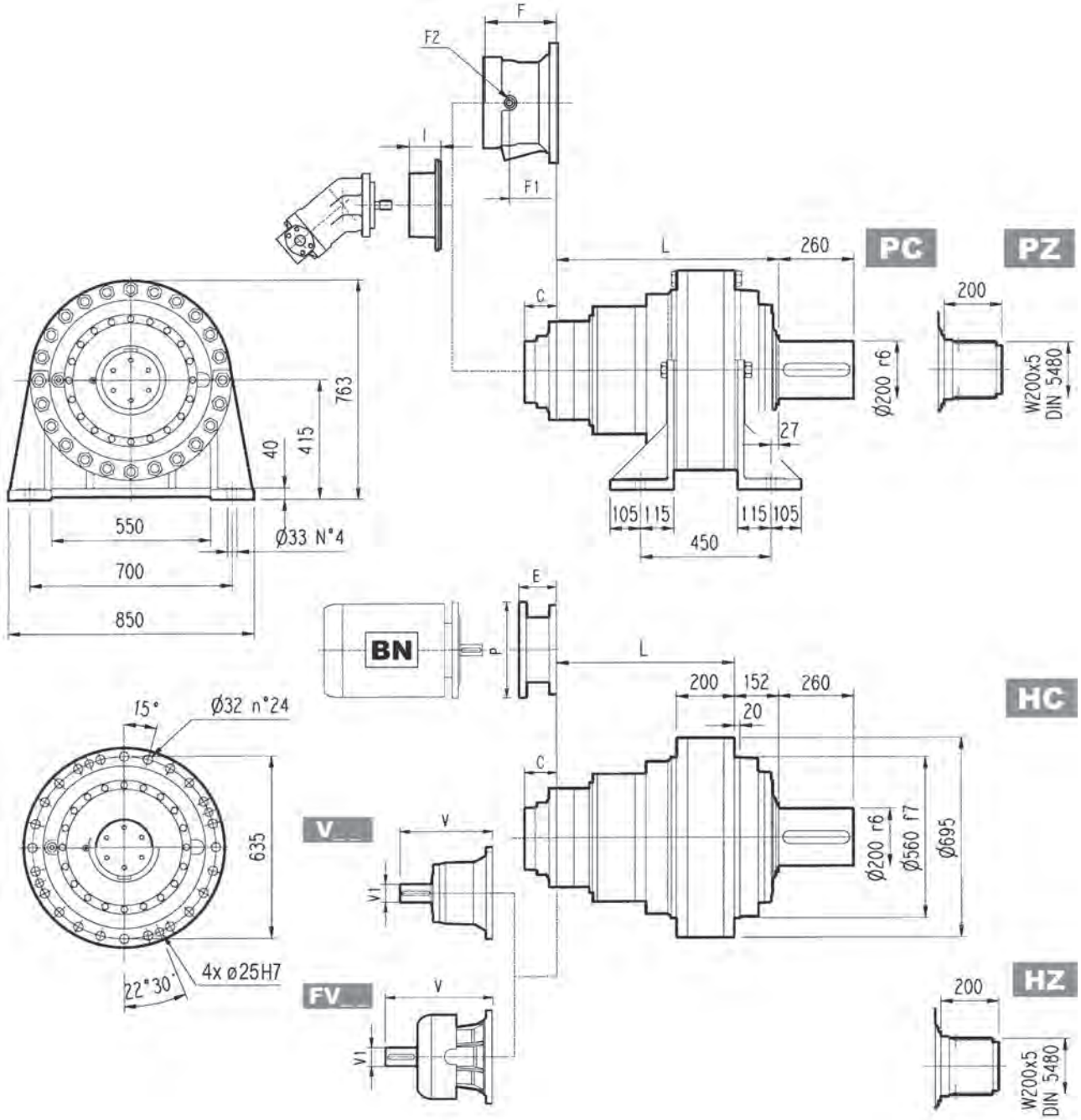

	L				Kg			
	PC - PZ	HC - HZ	FZ - FZP	FP	PC - PZ	HC - HZ	FZ - FZP	FP
317 L1	315	163	163	163	950	800	750	800
317 L2	624	472	472	472	1080	930	880	930
317 L3	774	622	622	622	1140	990	940	990
317 L4	862	710	710	710	1152	1000	952	1000

	V	V1	Kg	V	V1	Kg	V	V1	Kg	V	V1	Kg	C	Input	I	F	F1	F2	Type	Input	Kg
317 L1	—	—	—	—	—	—	—	—	—	—	—	—	181	F		—	—	—	—	—	—
317 L2	343	80	55	—	—	—	451	80	71	—	—	—	75	D		—	—	—	—	—	—
317 L3	315	80	35	313	60	28	375	80	48	363	60	34	51	B	457	201	153	1/4 G	6	B	28
317 L4	239	48	15	—	—	—	276	48	17	—	—	—	37	A		145	95	1/4 G	5	A	16

317 L

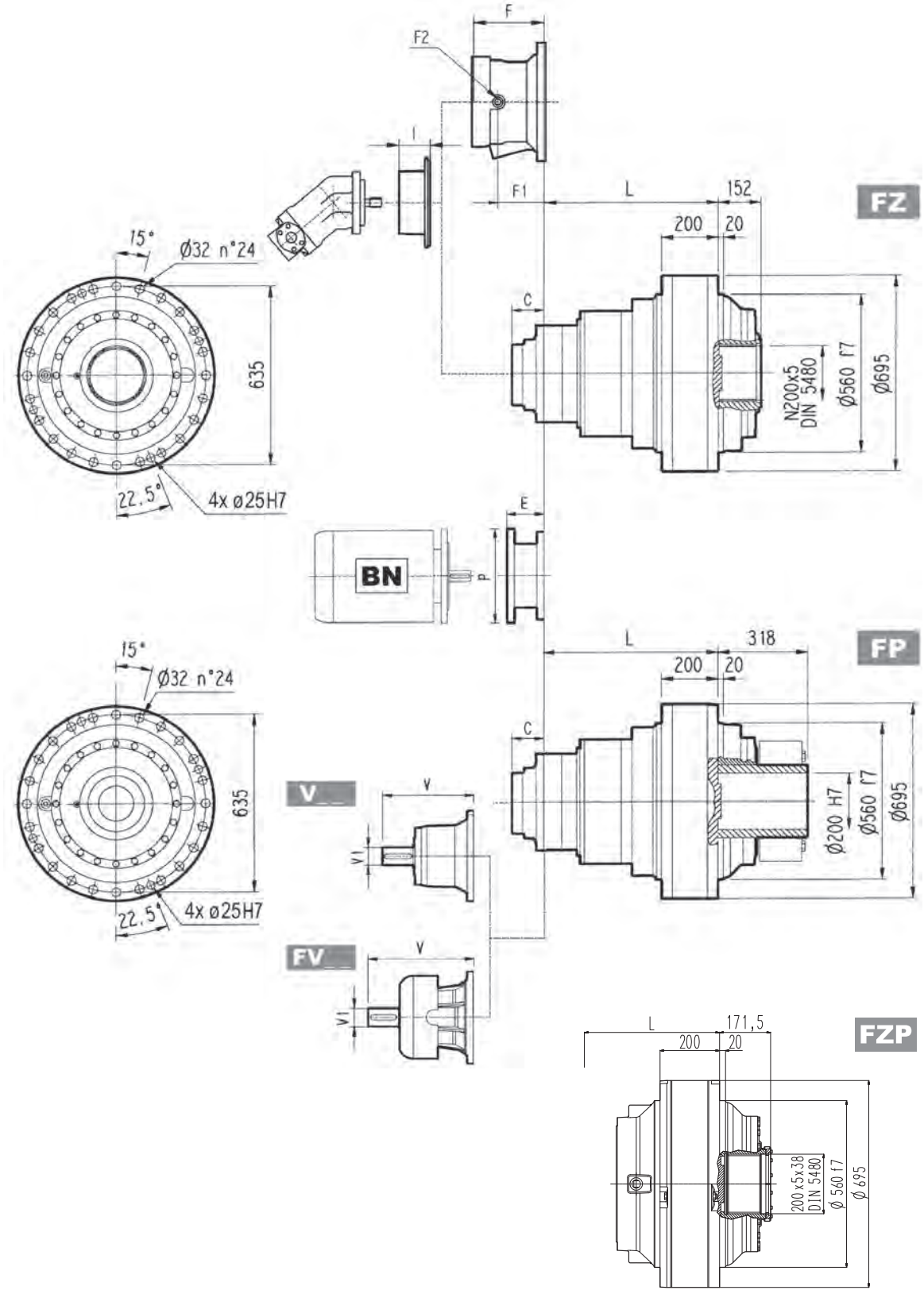

FP M_{2max} = 242000 Nm

	P132		P160		P180		P200		P225		P250	
	E	P	E	P	E	P	E	P	E	P	E	P
317 L3	—	—	—	—	196	350	186	400	216	450	216	550
317 L4	114	300	144	350	144	350	174	400	—	—	—	—

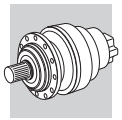

317 R

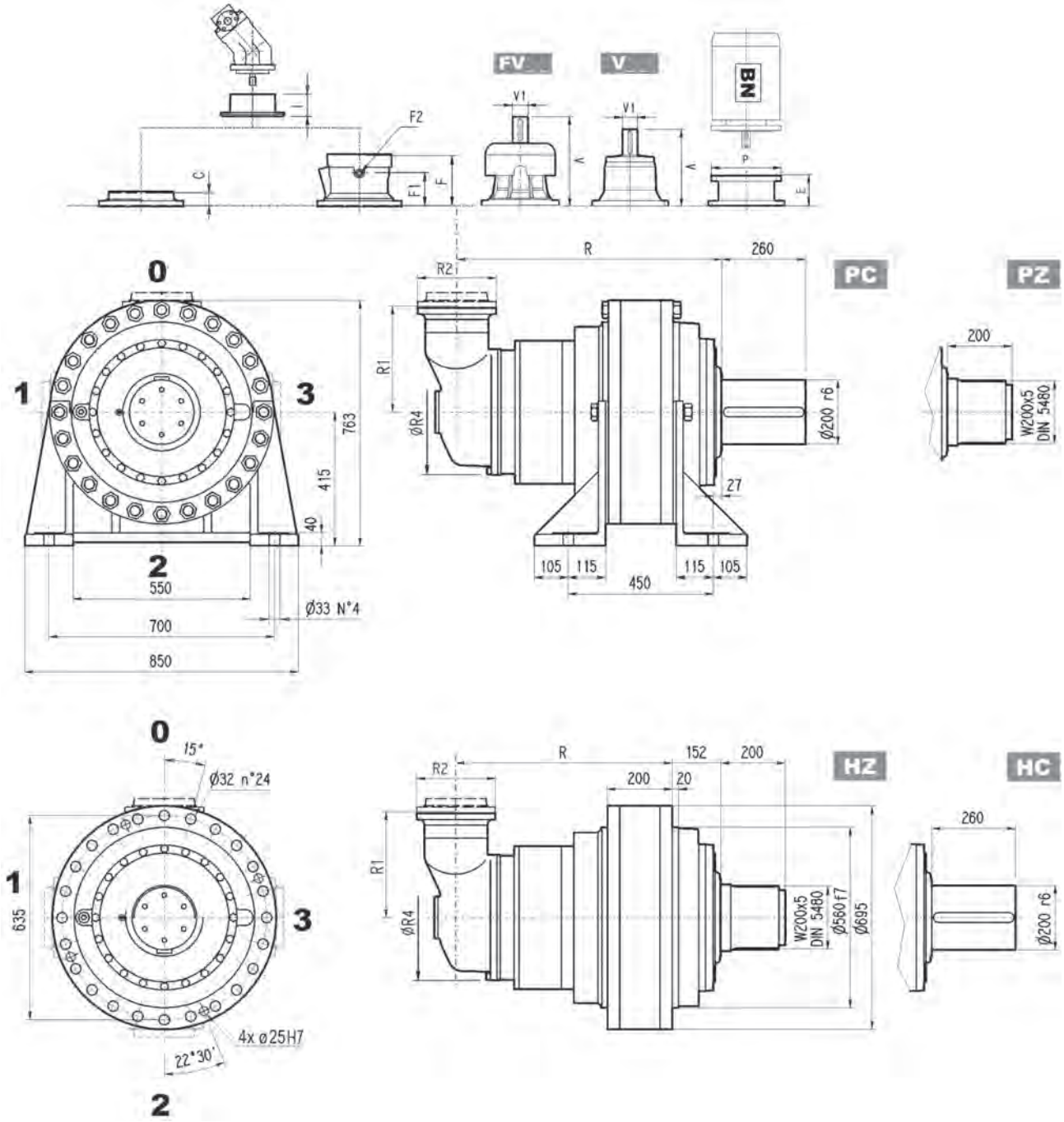

	R				R1	R2	R4	Kg			
	PC-PZ	HC-HZ	FZ - FZP	FP				PC-PZ	HC-HZ	FZ - FZP	FP
317 R3 (B)	853	701	701	701	345	292	400	1210	1060	1010	1060
317 R3 (C)	853	701	701	701	390	292	480	1220	1070	1020	1070
317 R4	892	740	740	740	225	245	345	1190	1040	990	1040

	V	V1	Kg	V	V1	Kg	V	V1	Kg	V	V1	Kg	C	Input	I	F	F1	F2	Type	Input	Kg
317 R3 (B)	307	60	23	—	—	—	357	60	28	—	—	—	45	B		195	147	1/4 G	6	B	28
317 R3 (C)	307	60	23	—	—	—	357	60	28	—	—	—	45	B		195	147	1/4 G	6	B	28
317 R4	239	48	15	—	—	—	276	48	17	—	—	—	37	A	457	105	65	1/4 G	4	A	10

317 R

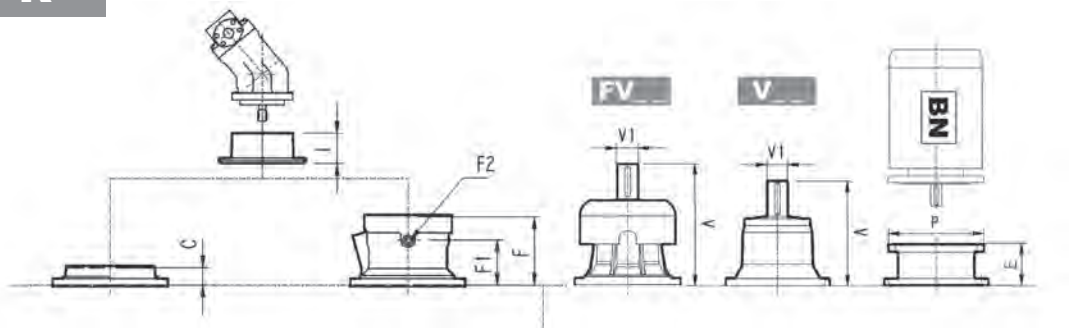

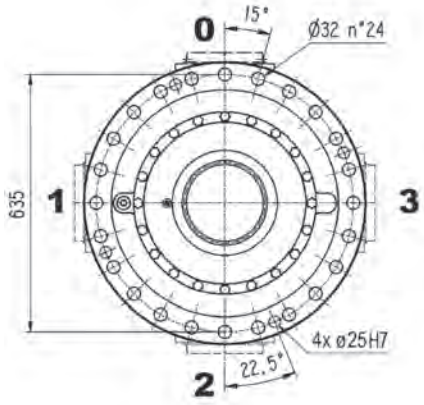

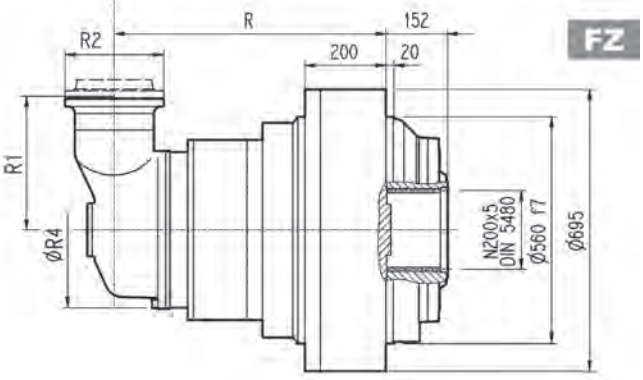

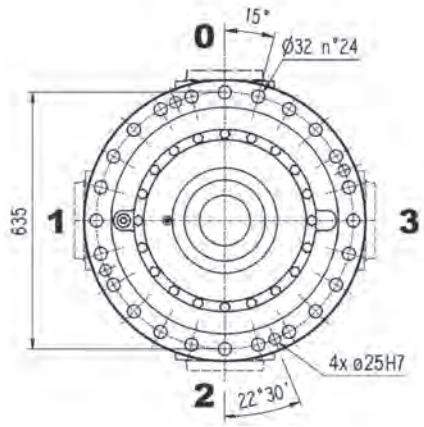

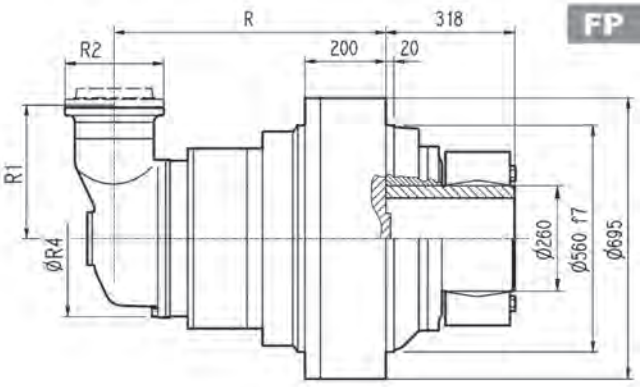

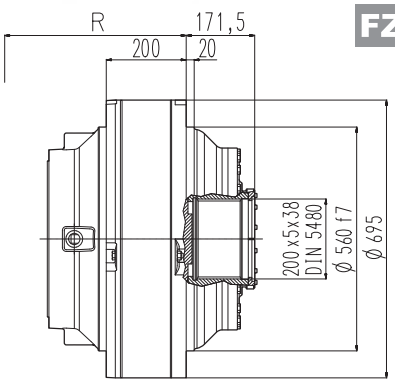

FP M_{2max} = 242000 Nm

	P132		P160		P180		P200		P225		P250	
	E	P	E	P	E	P	E	P	E	P	E	P
317 R3 (B)	—	—	—	—	152	350	182	400	212	450	193	550
317 R3 (C)	—	—	—	—	152	350	182	400	212	450	193	550
317 R4	114	300	144	350	144	350	174	400	—	—	—	—

3/V 17 L3

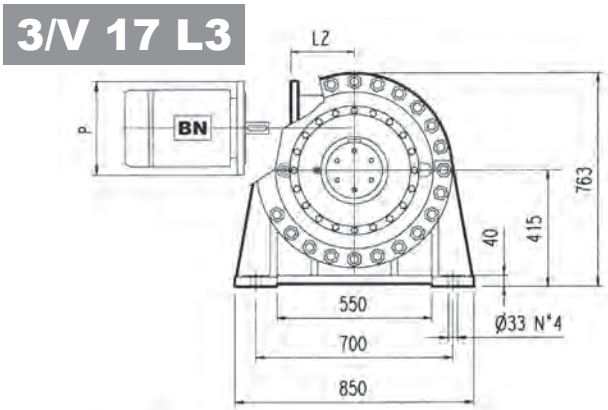

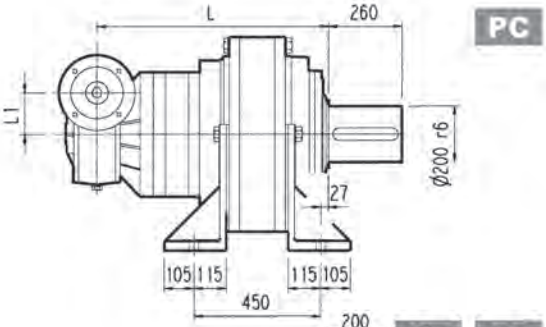

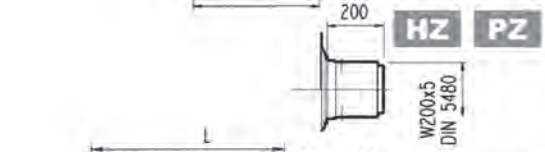

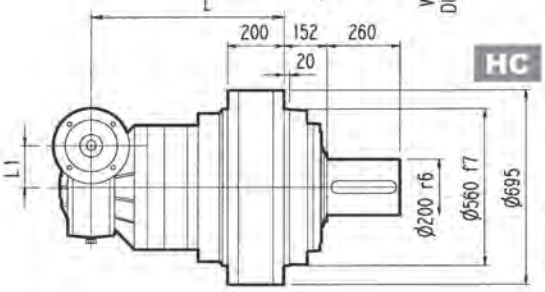

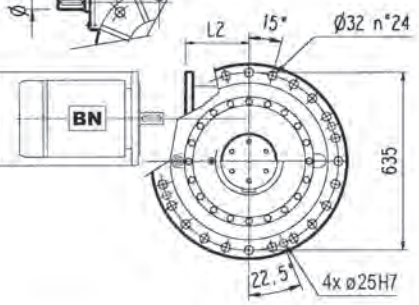

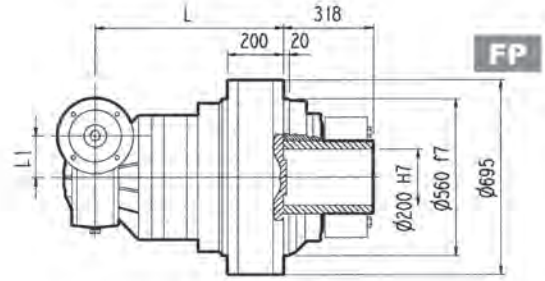

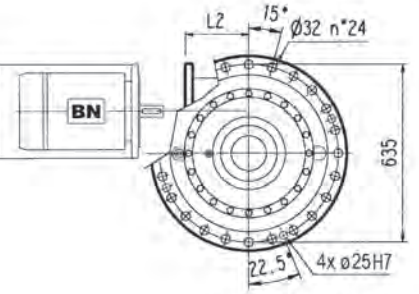

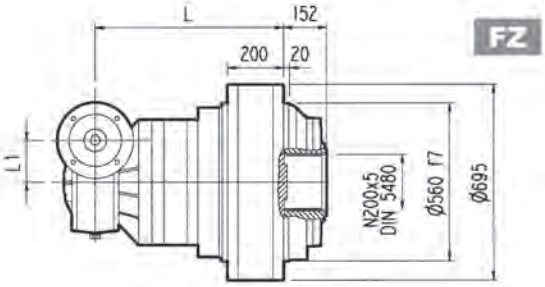

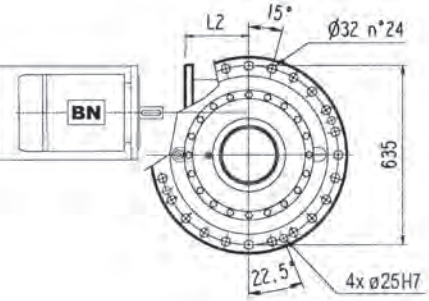

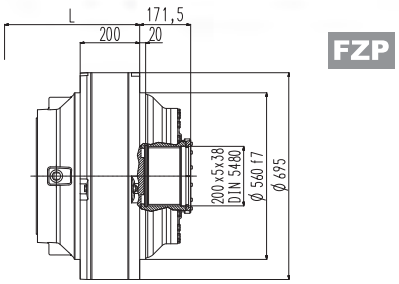

FP

M_{2max} = 242000 Nm

	L				L1	D1	L3	L4	Kg			
	PC - PZ	HC - HZ	FZ - FZP	FP					PC - PZ	HC - HZ	FZ - FZP	FP
3/V 17 L3	894	745	745	745	250	55	276	110	1400	1250	1200	1250

	P132		P160		P180		P200		P225	
	L2	P	L2	P	L2	P	L2	P	L2	P
3/V 17 L3	531	300	506	350	506	350	531	400	536	450

3/V 17 L4

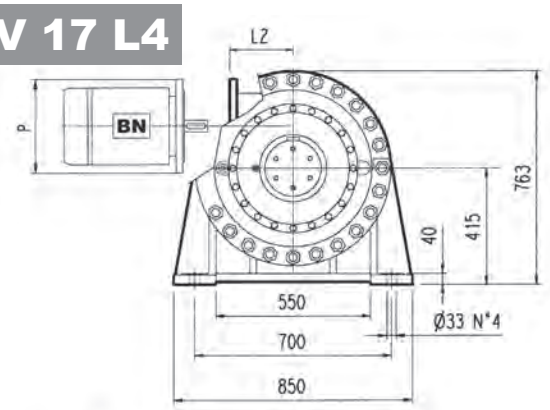

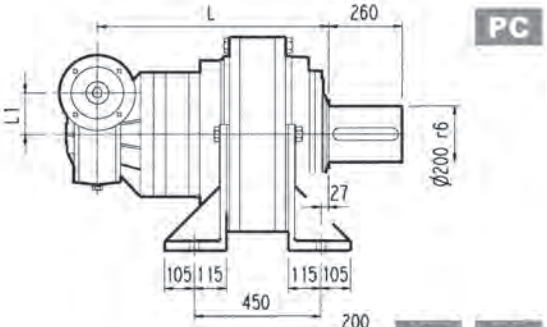

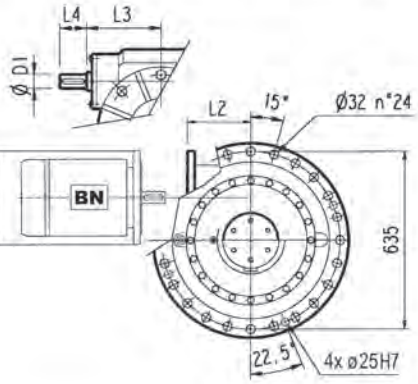

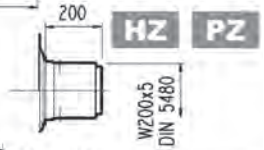

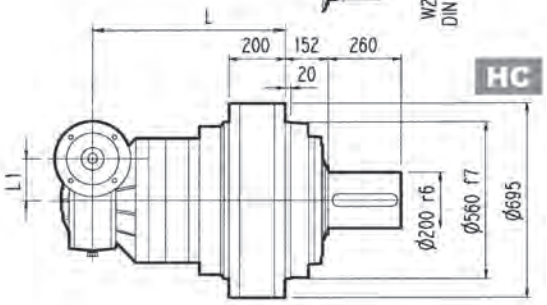

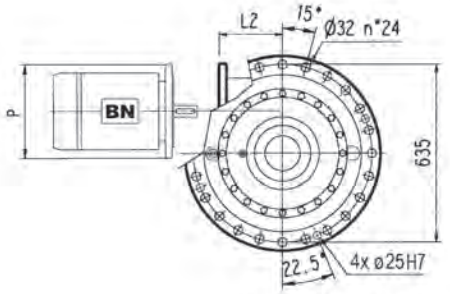

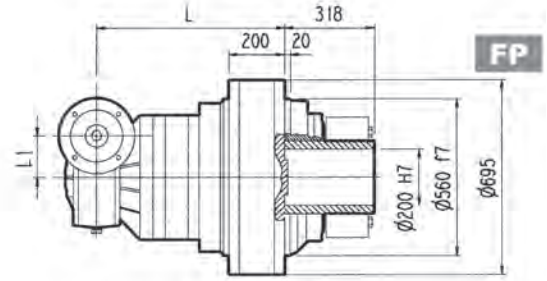

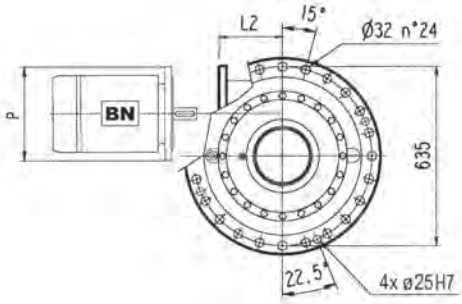

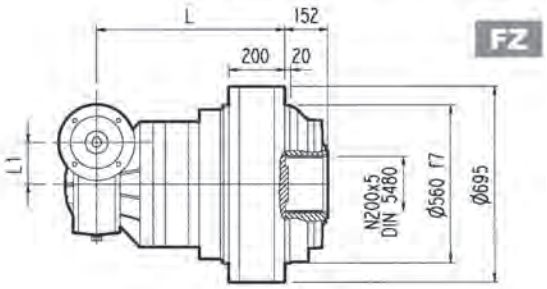

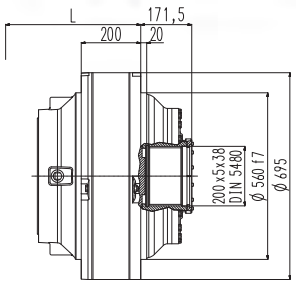

FP

M_{2max} = 242000 Nm

	L				L1	D1	L3	L4	Kg			
	PC - PZ	HC - HZ	FZ - FZP	FP					PC - PZ	HC - HZ	FZ - FZP	FP
3/V 17 L4	975	823	823	823	185.4	40	214.5	70	1250	1090	1040	1090

	P100	P112	P132		P160		P180	
	P	P	L2	P	L2	P	L2	P
3/V 17 L4	250	250	217	300	217	350	217	350

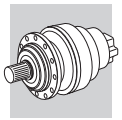

317 L | 317 R | 3/V 17 L

HC

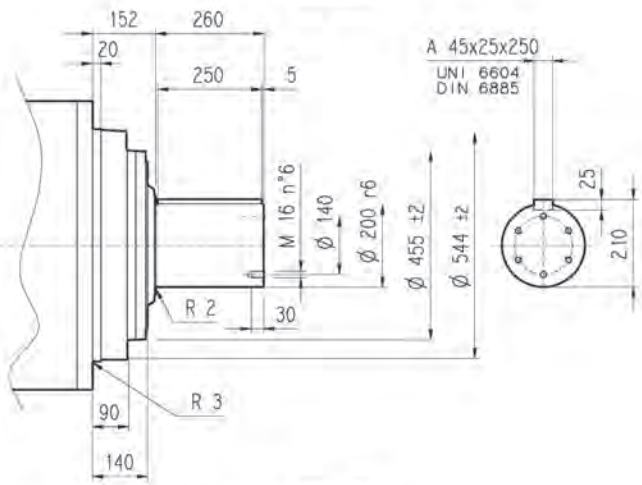

PC

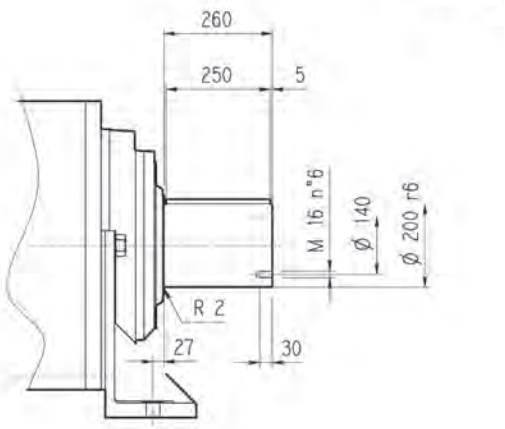

HZ

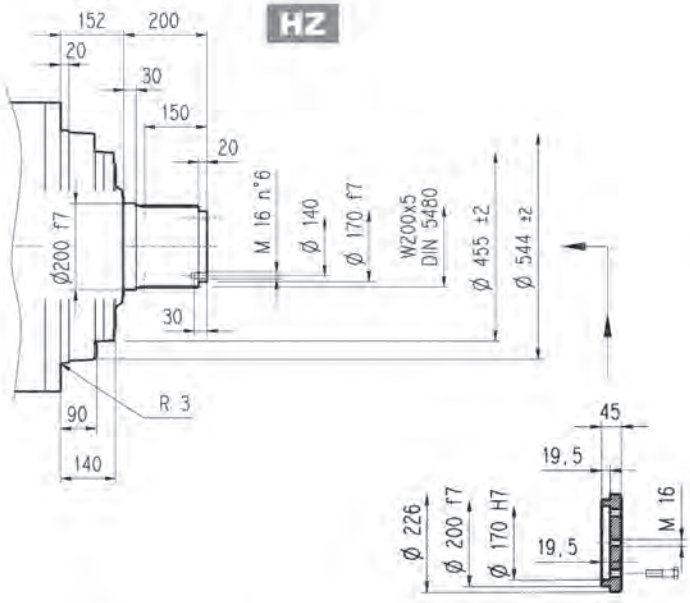

FZ

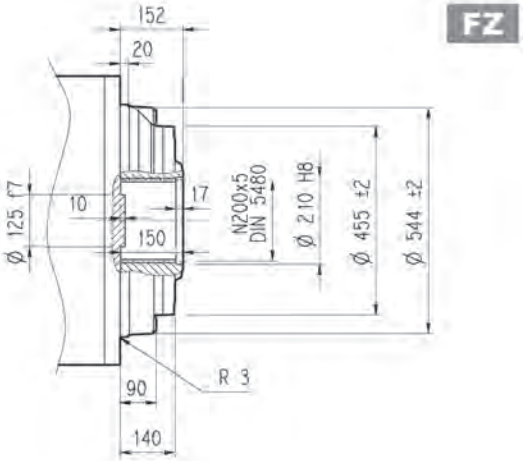

FP

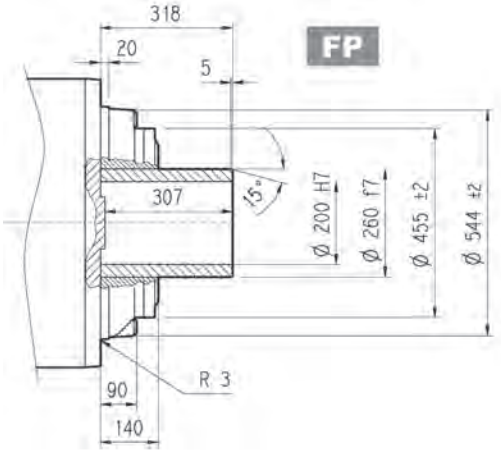

FZP

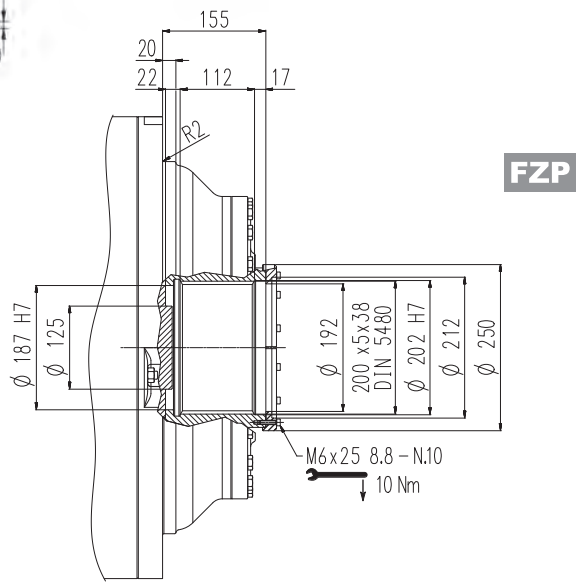

FP | M_{2max} = 242000 Nm

Bonfiglioli Riduttori

Flange

W0A

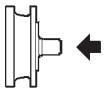

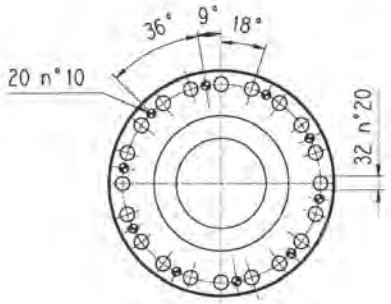

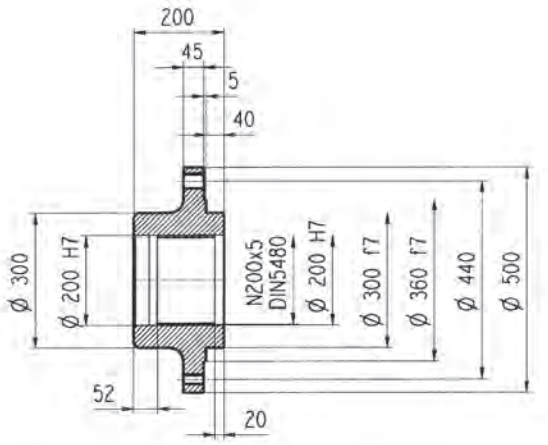

Material: Steel C40

Sleeve coupling

M0A

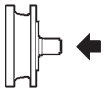

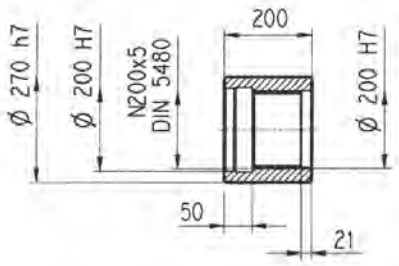

Material: Steel 16CrNi4

Shrink disc

G0A

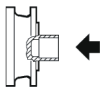

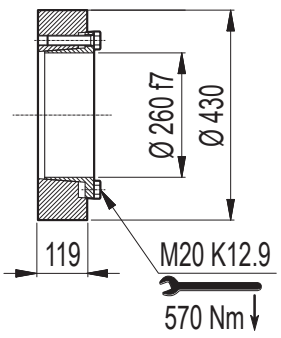

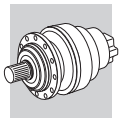

317 L 317 R

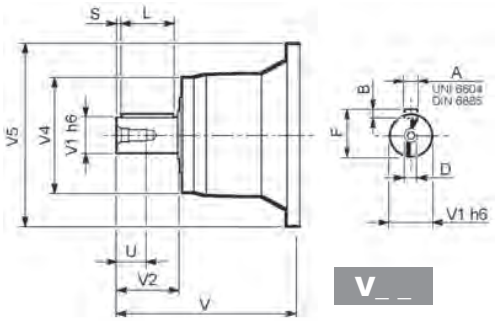

V_ _

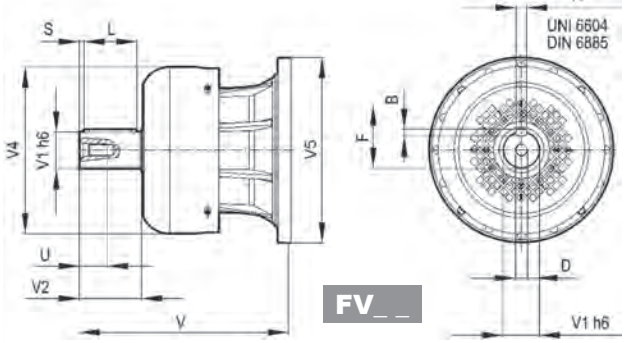

FV_ _

		V	V1	V2	V4	V5	A	B	F	L	S	D	U
317 L2	V11B	343	80	130	200	445	22	14	85	110	10	M16	36
	FV11B	451	80	130	347.5	445	22	14	85	110	10	M16	36
317 L3	V07B	315	80	130	200	345	22	14	85	110	10	M16	36
	FV07B	375	80	130	347.5	348	22	14	85	110	10	M16	36
	V07A	313	60	105	155	345	18	11	64	90	7.5	M16	36
	FV07A	363	60	105	309	348	18	11	64	90	7.5	M16	36
317 L4	V05B	239	48	82	155	245	14	9	51.5	70	6	M16	36
	FV05B	276	48	82	219.5	244	14	9	51.5	70	6	M16	36
317 R3 (B) (C)	V06B	307	60	105	155	292	18	11	64	90	7.5	M16	40
	FV06B	357	60	105	309	292	18	11	64	90	7.5	M16	36
317 R4	V05B	239	48	82	155	245	14	9	51.5	70	6	M16	36
	FV05B	276	48	82	219.5	244	14	9	51.5	70	6	M16	36

317 L 317 R

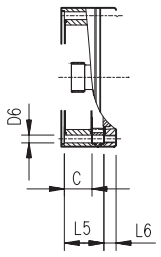

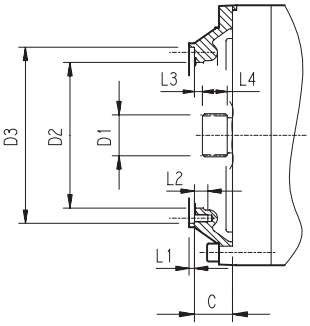

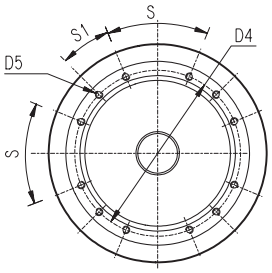

		C	D1	D2	D3	D4	D5	D6	L1	L2	L3	L4	L5	L6	S	S1	Input
317 L1	V9AF	181	120x3 DIN 5480	365	390 g7	415	M16 n°18	—	4	30	3	65	—	—	20°	20°	F
317 L2	V9AD	75	80x74 DIN 5482	270	335 H7	314	M16 n°8	—	5	30	9.5	40	—	—	60°	30°	D
317 L3	V9AB	51	58x53 DIN 5482	195	236 H7	222	M10 n°12	—	4	18	11	22	—	—	45°	22.5°	B
317 L4	V9AA	37	40x36 DIN 5482	140	178 H7	165	M10 n°8	—	4	18	9	18	—	—	45°	45°	A
317 R4	V9AA	37	40x36 DIN 5482	140	178 H7	165	M10 n°8	11	4	18	9	18	—	—	45°	45°	A
317 R3 (B) (C)	V9AB	45	58x53 DIN 5482	195	236 H7	222	M10 n°12	—	4	18	11	22	—	—	45°	22.5°	B

3/V 17 L

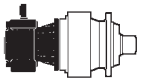

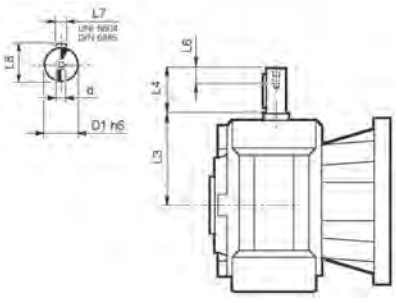

	D1 h6	L3	L4	L6	L7	L8	d
3/V 17 L3_HS	55	276	110	40	16	59	M16
3/V 17 L4_HS	40	214.5	70	20	12	43	M8

Bonfiglioli Riduttori

317 L | 317 R | 3/V 17 L

Permissible radial and axial loads on output shaft with $Fh_2 : n_2 \cdot h = 100000$

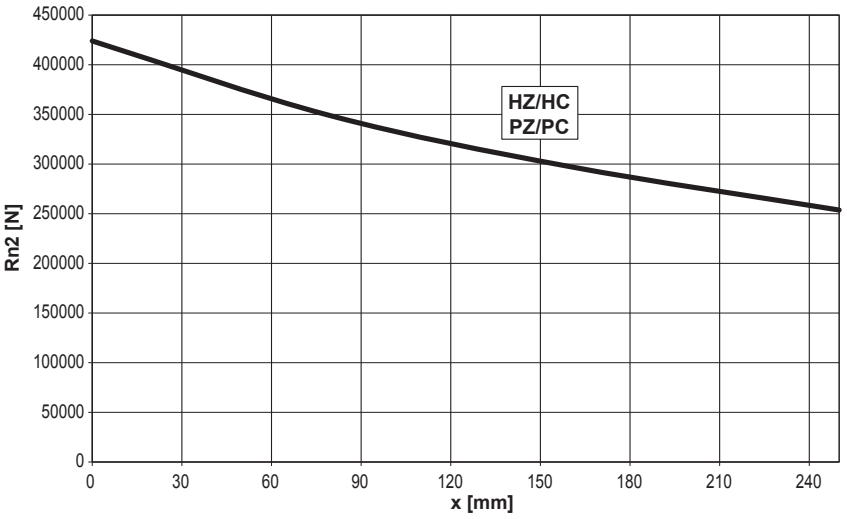

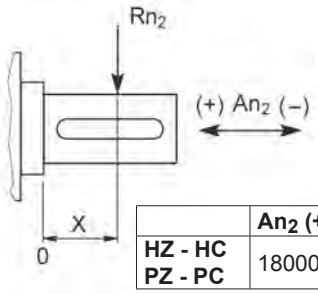

	An2 (+)	An2 (-)
HZ - HC PZ - PC	180000	150000

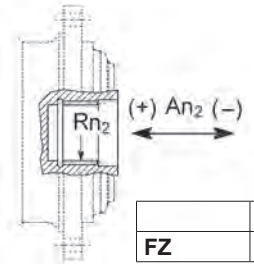

	Rn2	An2 (+/-)
FZ	69624	69624

Load corrective factor fh_2 on shafts	$Fh_2 = n_2 \cdot h$		10000	25000	50000	100000	500000	1000000
	fh_2	FZ	**2.15**	**1.59**	**1.26**	**1.00**	**0.58**	**0.46**
		HZ - HC - PZ - PC	**1.50**	**1.50**	**1.23**	**1.00**	**0.62**	**0.50**

Permissible radial loads on input shaft with $Fh_1 : n_1 \cdot h = 250000$

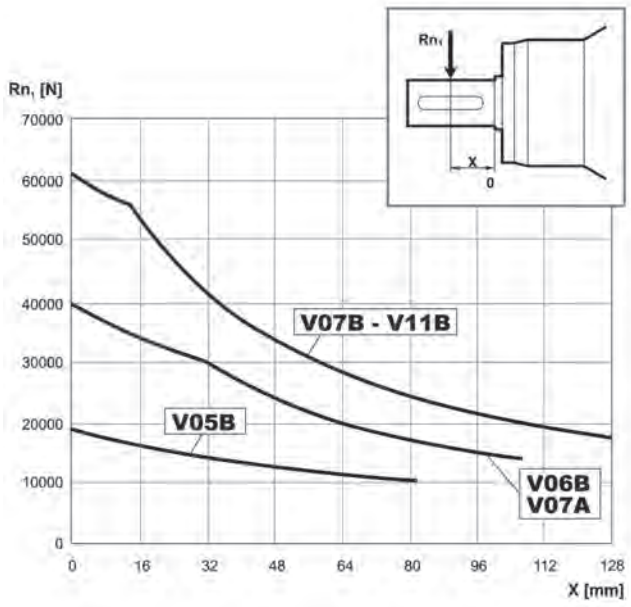

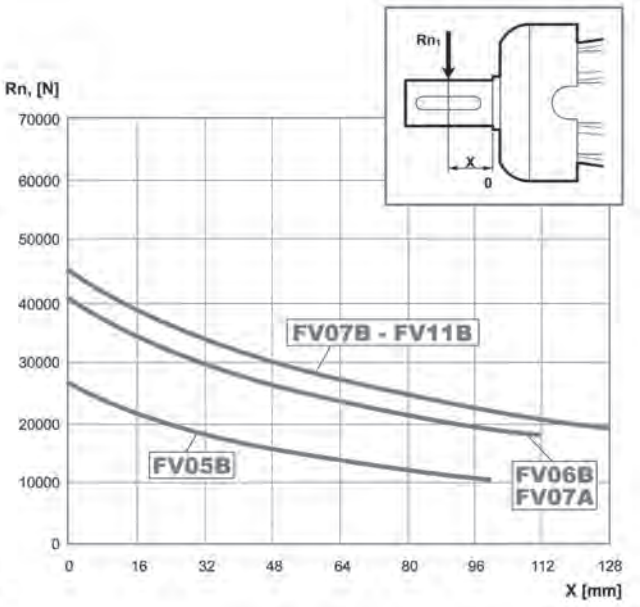

Load corrective factor fh_1 on shafts	$Fh_1 = n_1 \cdot h$	250000	500000	1000000	2000000	5000000	10000000
	fh_1	**1**	**0.79**	**0.63**	**0.50**	**0.37**	**0.29**

318 L

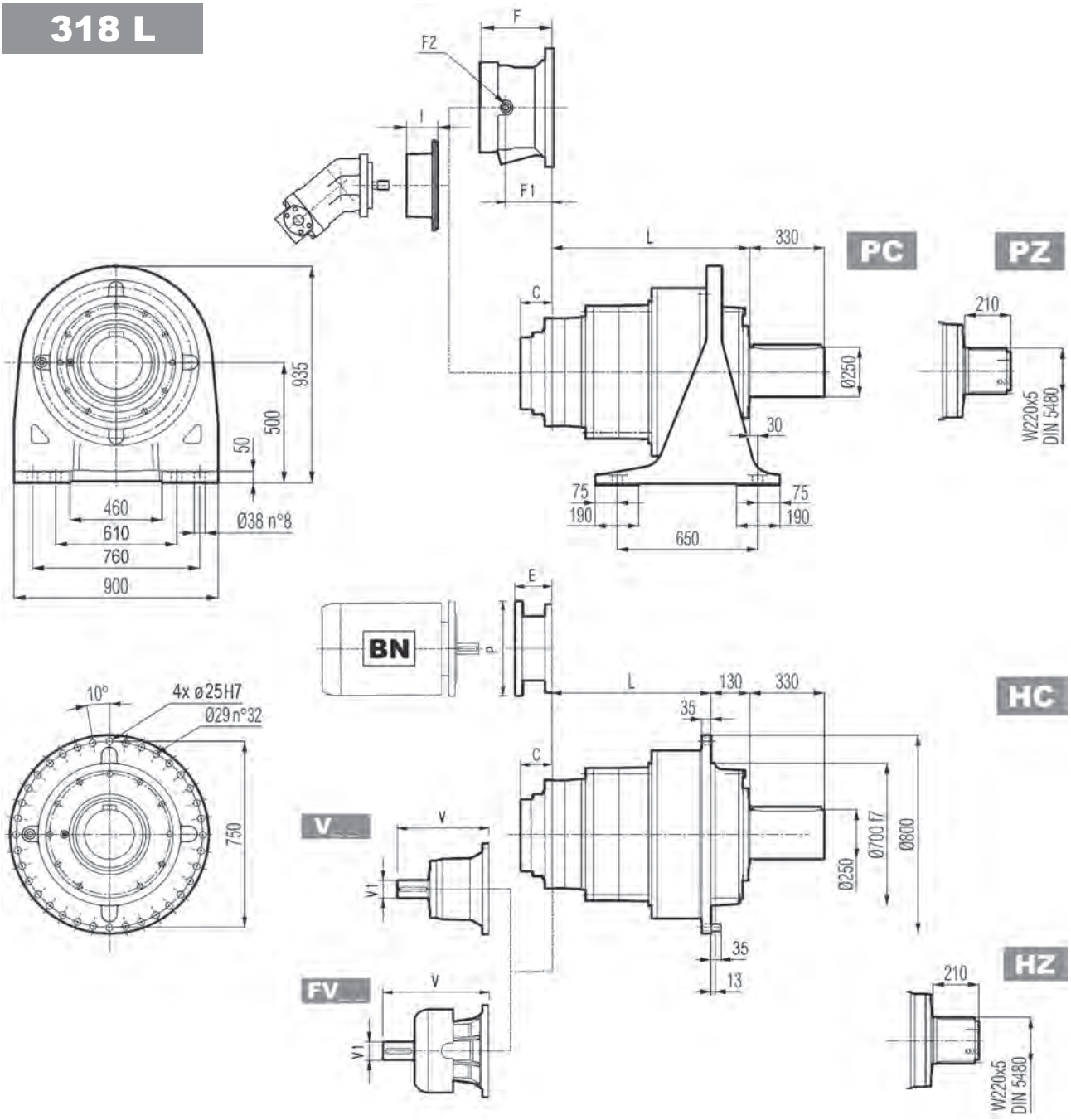

	L				Kg			
	PC - PZ	HC - HZ	FZ - FZP	FP	PC - PZ	HC - HZ	FZ - FZP	FP
318 L1	332	202	202	202	1250	950	800	830
318 L2	677	547	547	547	1500	1200	1050	1080
318 L3	889	759	759	759	1600	1300	1150	1180
318 L4	1022	892	892	892	1650	1350	1200	1230

	V	V1	Kg	V	V1	Kg	V	V1	Kg	V	V1	Kg	C	Input	I	F	F1	F2	Type	Input	Kg
318 L1	—	—	—	—	—	—	—	—	—	—	—	—	208	G		—	—	—	—	—	—
318 L2	556	120	125	—	—	—	—	—	—	—	—	—	116	E		—	—	—	—	—	—
318 L3	348	80	55	—	—	—	456	80	85	—	—	—	81	D	457	232	185	1/4 G	6	B	28
318 L4	315	80	35	313	60	28	375	80	48	363	60	34	51	B		201	153	1/4 G	6	B	28

318 L

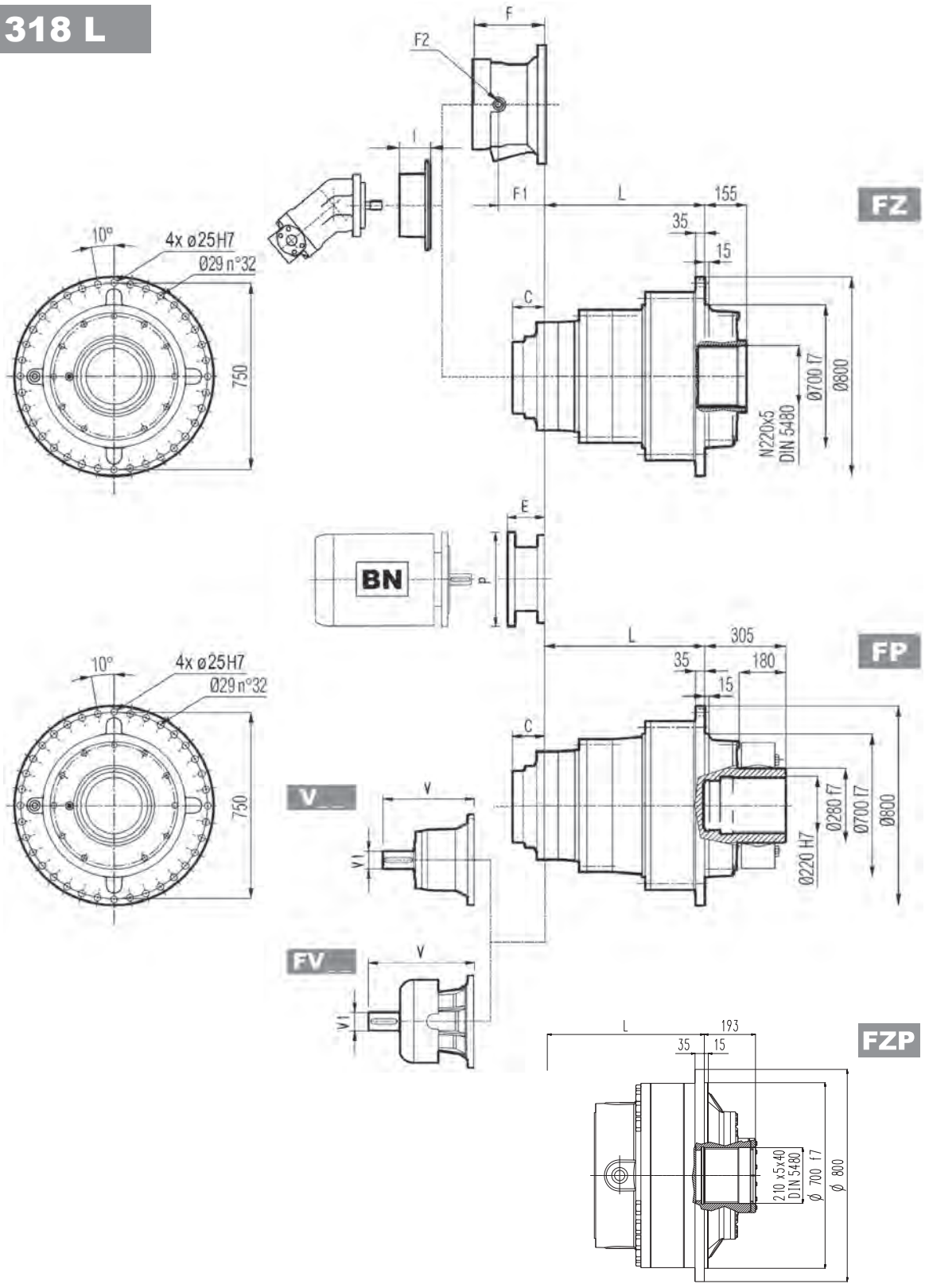

FP | **M_{2max} = 322000 Nm**

	P180		P200		P225		P250	
	E	P	E	P	E	P	E	P
318 L3	—	—	267	400	297	450	297	550
318 L4	195	350	186	400	216	450	215	550

318 R

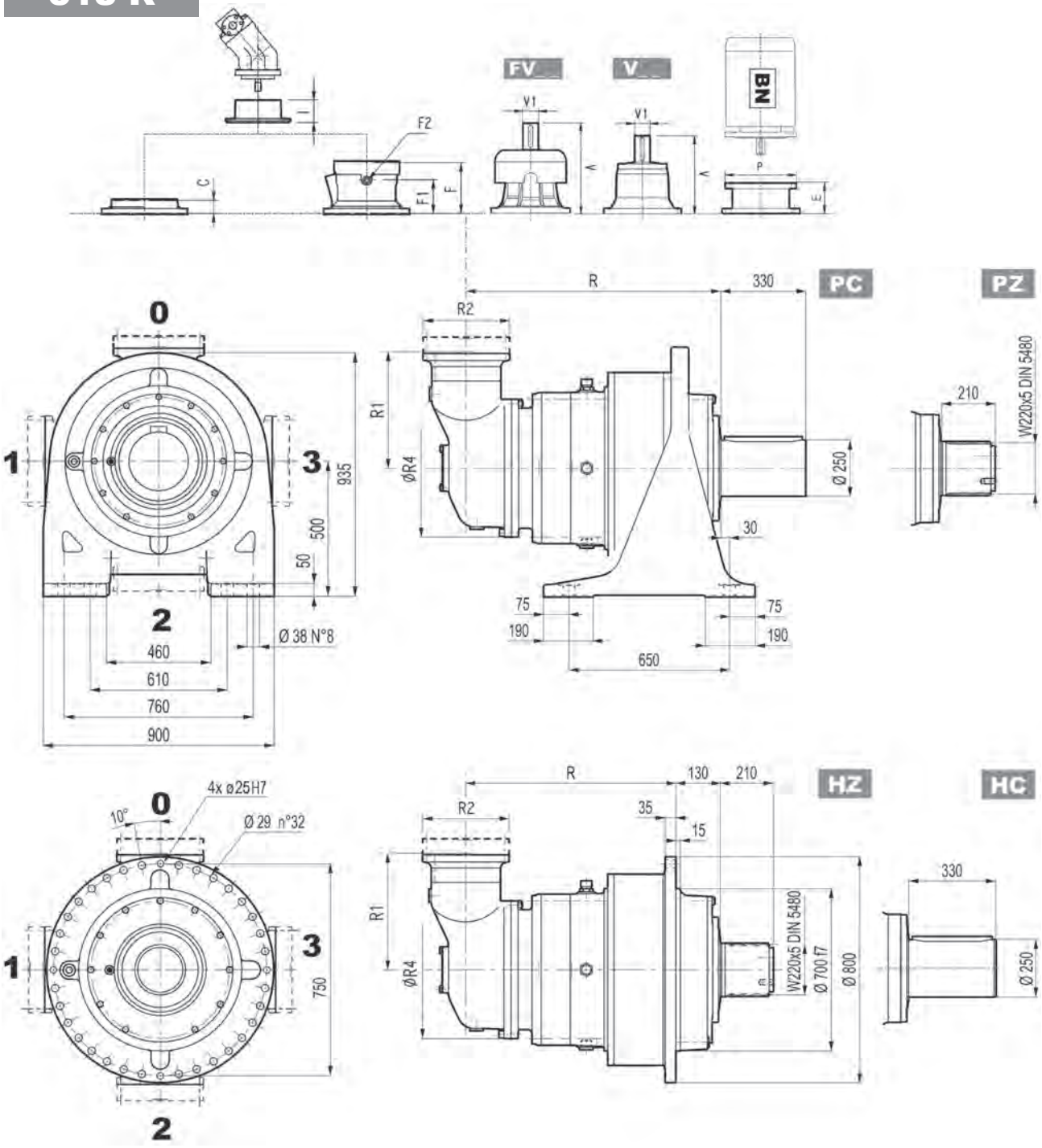

	R				R1	R2	R4	Kg			
	PC-PZ	HC-HZ	FZ - FZP	FP				PC-PZ	HC-HZ	FZ - FZP	FP
318 R4 (B)	1115	985	985	985	345	292	400	1720	1420	1270	1300
318 R4 (C)	1115	985	985	985	390	292	480	1730	1430	1280	1310

	V	V1	Kg	V	V1	Kg	V	V1	Kg	V	V1	Kg	C	Input	I	F	F1	F2	Type	Input	Kg
318 R4 (B)	307	60	23	—	—	—	357	60	28	—	—	—	45	B	457	195	147	1/4 G	6	B	28
318 R4 (C)	307	60	23	—	—	—	357	60	28	—	—	—	45	B		195	147	1/4 G	6	B	28

318 R

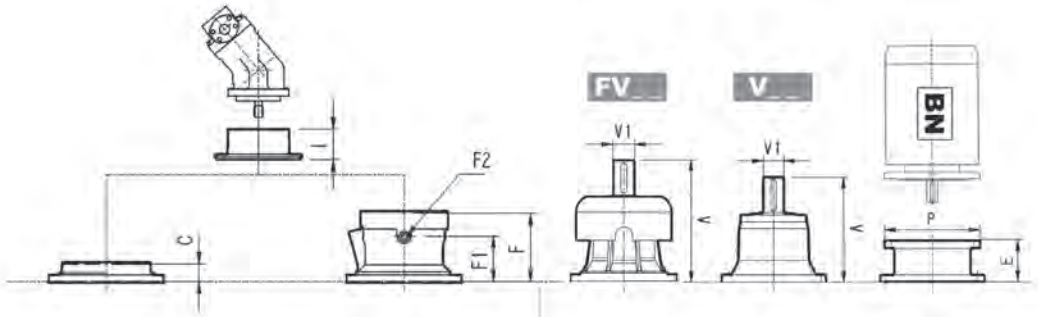

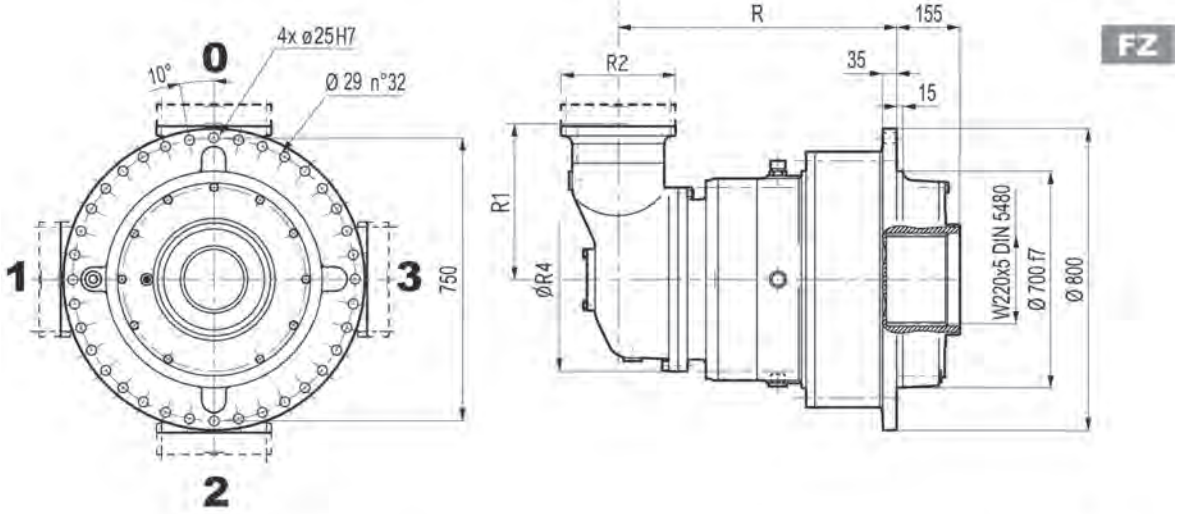

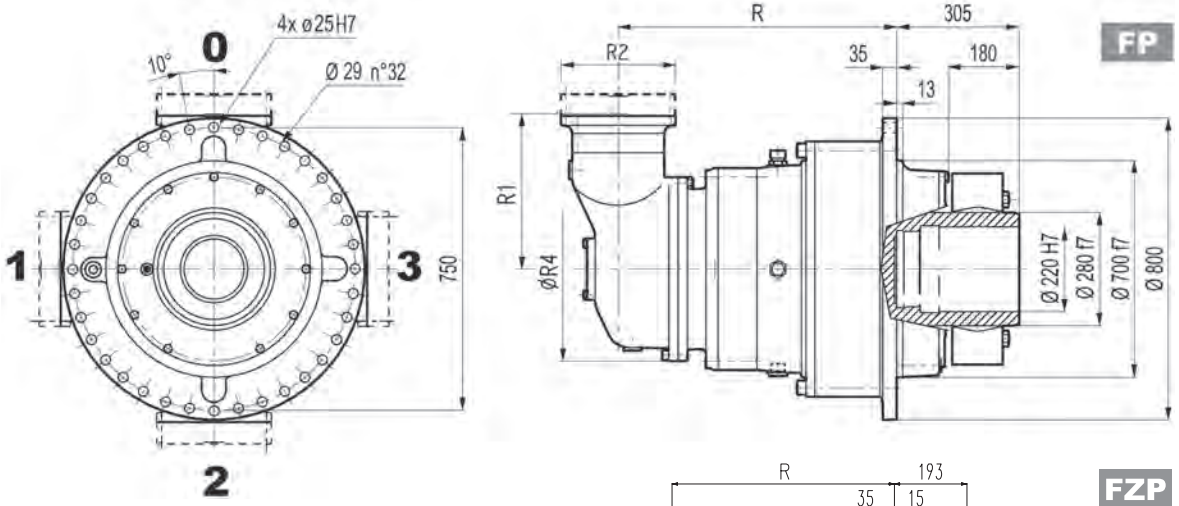

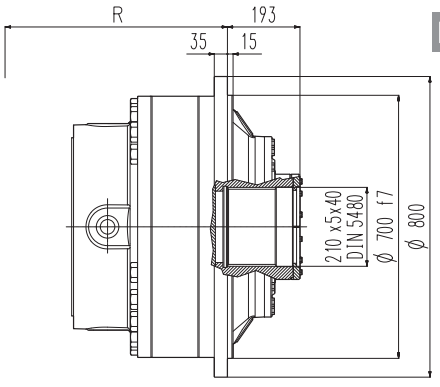

FP M_{2max} = 322000 Nm

	P132		P160		P180		P200		P225		P250	
	E	P	E	P	E	P	E	P	E	P	E	P
318 R4 (B)	—	—	—	—	152	350	182	400	212	450	193	550
318 R4 (C)	—	—	—	—	152	350	182	400	212	450	193	550

3/V 18 L4

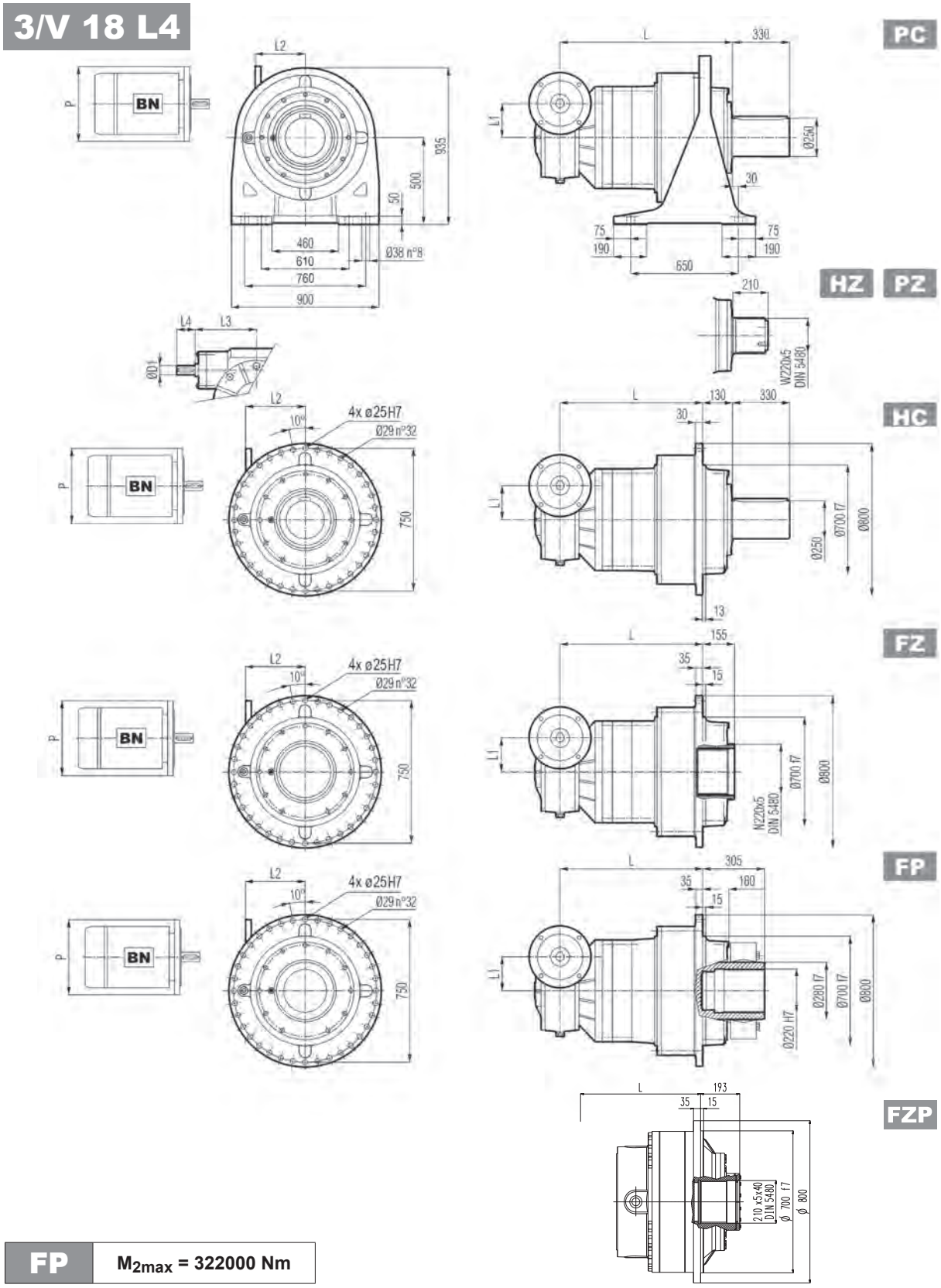

FP M_{2max} = 322000 Nm

	L				L1	D1	L3	L4	Kg			
	PC - PZ	HC - HZ	FZ - FZP	FP					PC - PZ	HC - HZ	FZ - FZP	FP
3/V 18 L4	1114	984	984	984	210	48	230	110	1810	1510	1360	1390

	P132		P160		P180		P200		P225	
	L2	P	L2	P	L2	P	L2	P	L2	P
3/V 18 L4	485	300	460	350	460	350	485	400	490	450

Bonfiglioli Riduttori

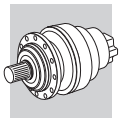

318 L | 318 R | 3/V 18 L4

HC

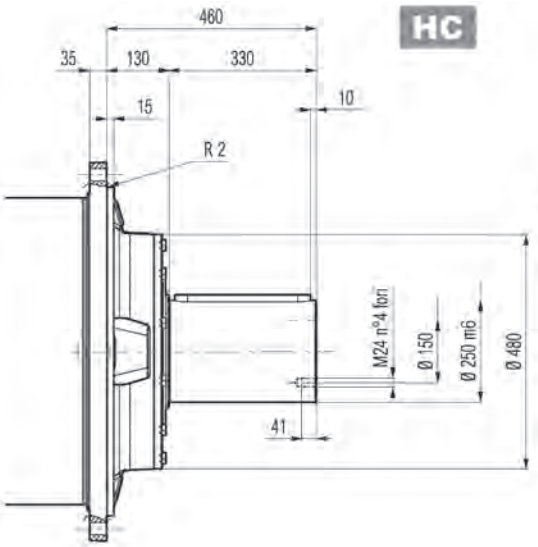

PC

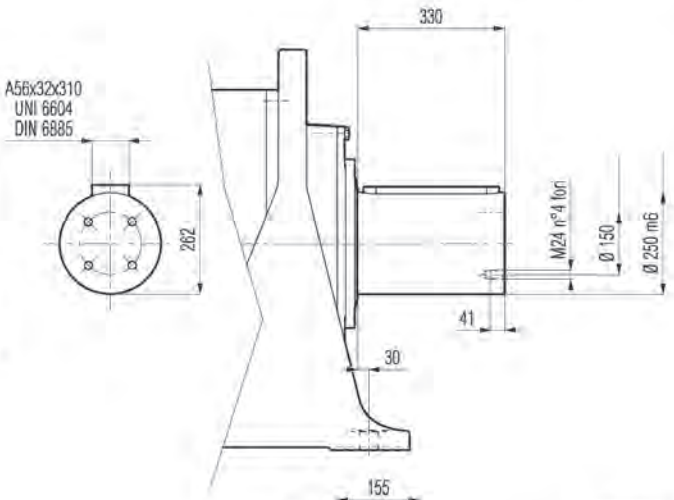

HZ

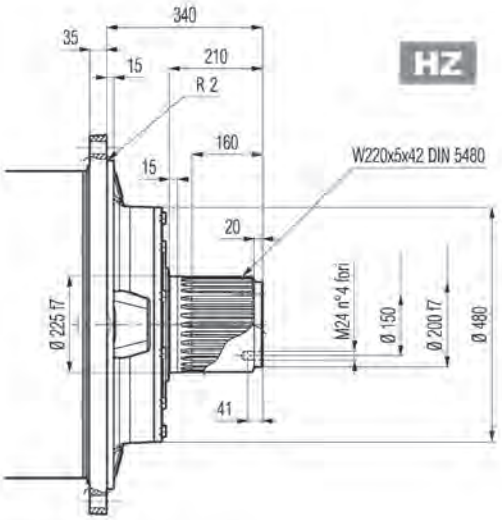

FZ

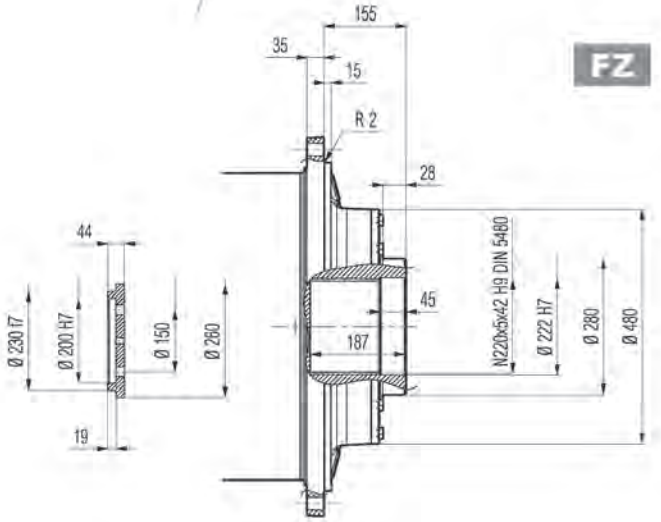

FP

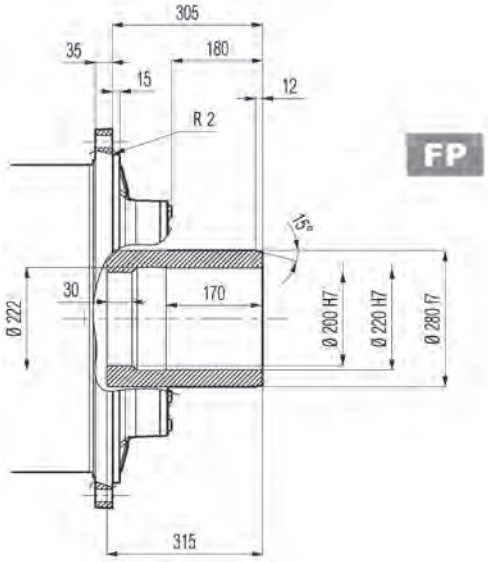

FZP

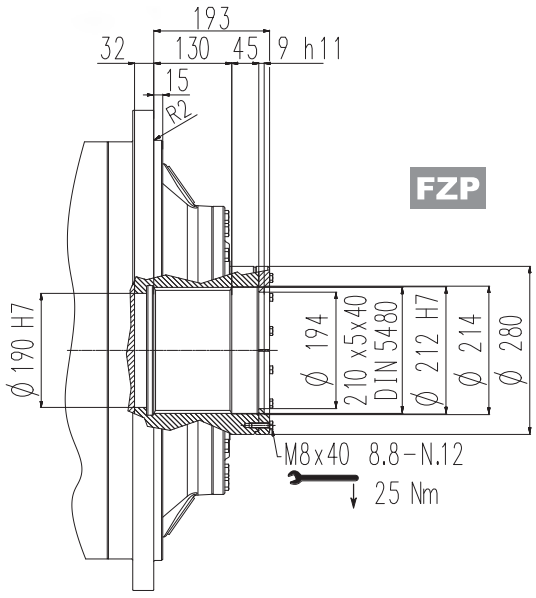

FP	M_{2max} = 322000 Nm

Flange

W0A

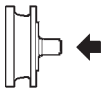

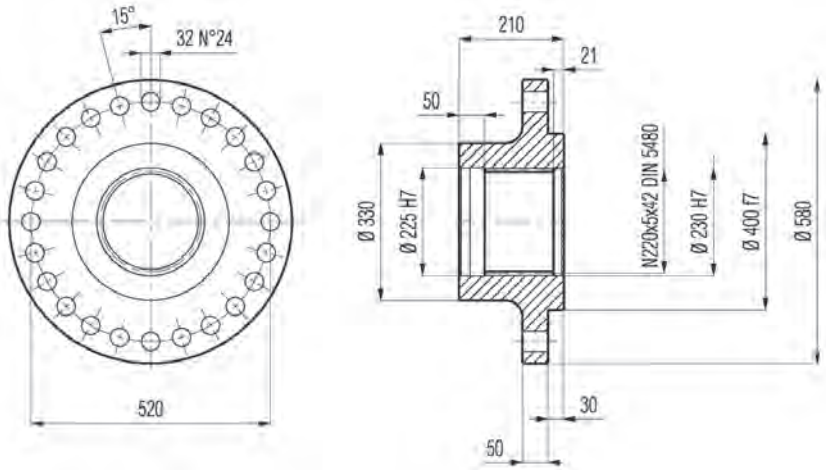

Material: Steel C40

Sleeve coupling

M0A

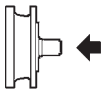

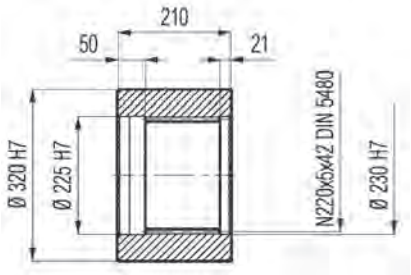

Material: Steel C40

Shrink disc

G0A

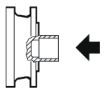

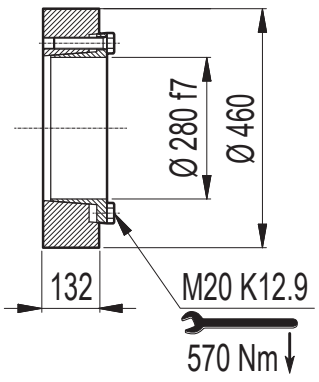

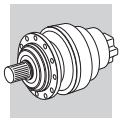

318 L 318 R

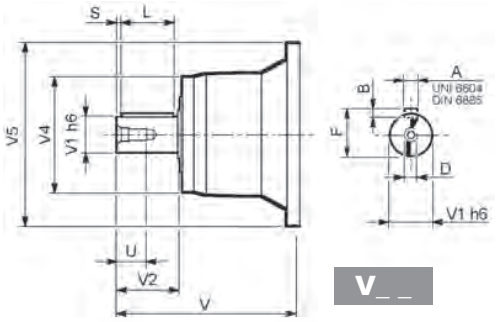

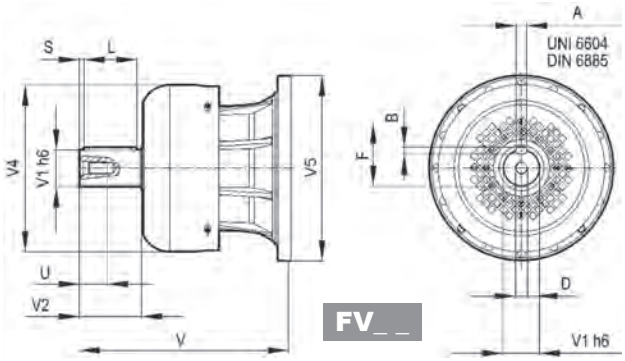

		V	V1	V2	V4	V5	A	B	F	L	S	D	U
318 L2	**V15B**	523	120	210	320	542	32	18	127	180	15	M24	50
318 L3	**V11B**	348	80	130	200	428	22	14	85	110	10	M16	36
	FV11B	456	80	130	347.5	428	22	14	85	110	10	M16	36
318 L4	**V07B**	315	80	130	200	345	22	14	85	110	10	M16	36
	FV07B	375	80	130	347.5	348	22	14	85	110	10	M16	36
	V07A	313	60	105	155	345	18	11	64	90	7.5	M16	36
	FV07A	363	60	105	309	348	18	11	64	90	7.5	M16	36
318 R4 (B) (C)	**V06B**	307	60	105	155	292	18	11	64	90	7.5	M16	36
	FV06B	357	60	105	309	292	18	11	64	90	7.5	M16	36

318 L 318 R

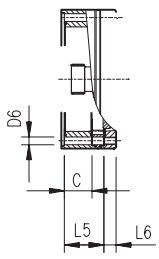

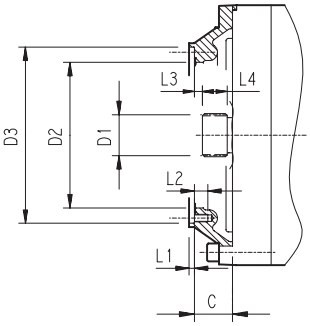

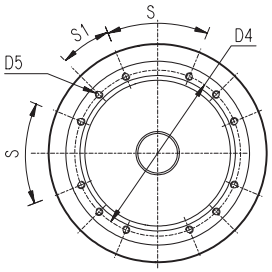

		C	D1	D2	D3	D4	D5	D6	L1	L2	L3	L4	L5	L6	S	S1	Input
318 L1	Please consult Bonfiglioli Technical Service																
318 L2	**V9AE**	116	100x94 DIN 5482	340	412 H7	390	M16 n° 18	—	7	30	8	55	—	—	20°	20°	E
318 L3	**V9AD**	81	80x74 DIN 5482	270	335 H7	314	M16 n° 8	—	5	30	8.5	40	—	—	60°	30°	D
318 L4	**V9AB**	51	58x53 DIN 5482	195	236 H7	222	M16 n° 12	—	4	18	11	22	—	—	45°	22.5°	B
318 R4 (B) (C)	**V9AB**	45	58x53 DIN 5482	195	236 H7	222	M10 n° 10	—	4	18	11	22	—	—	45°	22.5°	B

3/V 18 L4

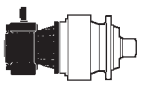

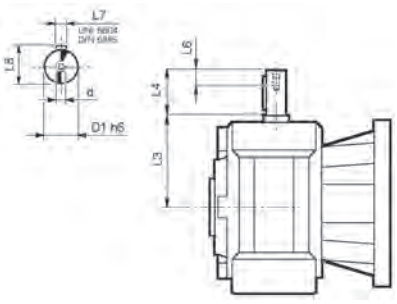

	D1 h6	L3	L4	L6	L7	L8	d
3/V 18 L4_HS	48	230	110	40	14	51.5	M16

Permissible radial and axial loads on output shaft with $Fh_2 : n_2 \cdot h = 100000$

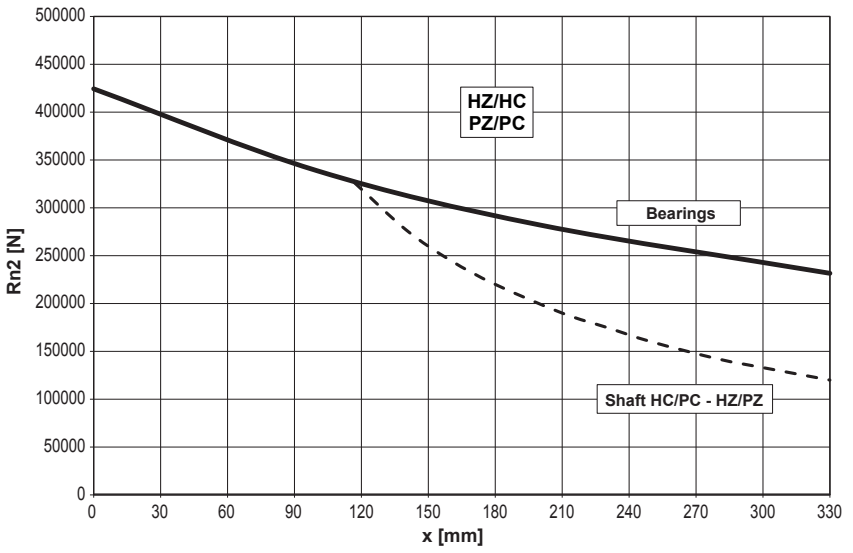

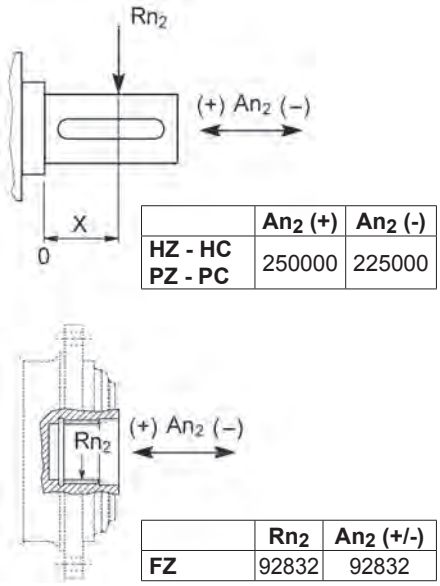

	An2 (+)	An2 (-)
HZ - HC PZ - PC	250000	225000

	Rn2	An2 (+/-)
FZ	92832	92832

	$Fh_2 = n_2 \cdot h$		10000	25000	50000	100000	500000	1000000
Load corrective factor fh_2 on shafts	fh_2	FZ	**2.15**	**1.59**	**1.26**	**1.00**	**0.58**	**0.46**
		HC - PC	**1.96**	**1.52**	**1.23**	**1.00**	**0.62**	**0.50**
		HZ - PZ	**1.15**	**1.00**	**1.00**	**1.00**	**0.62**	**0.50**

Permissible radial loads on input shaft with $Fh_1 : n_1 \cdot h = 250000$

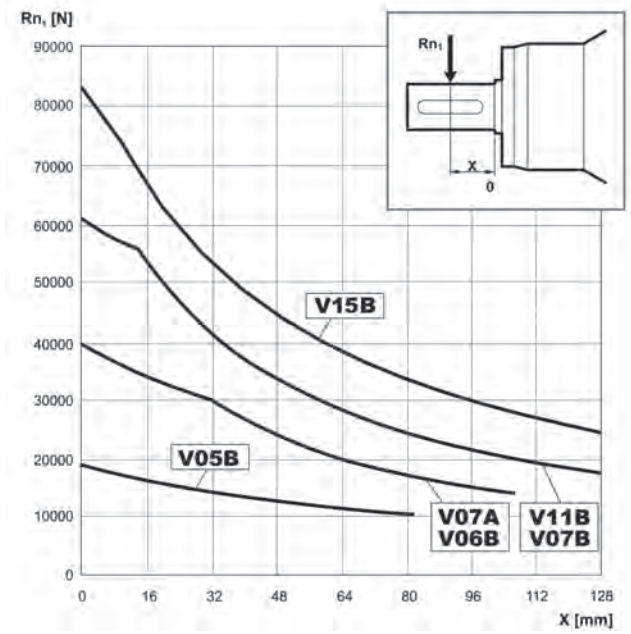

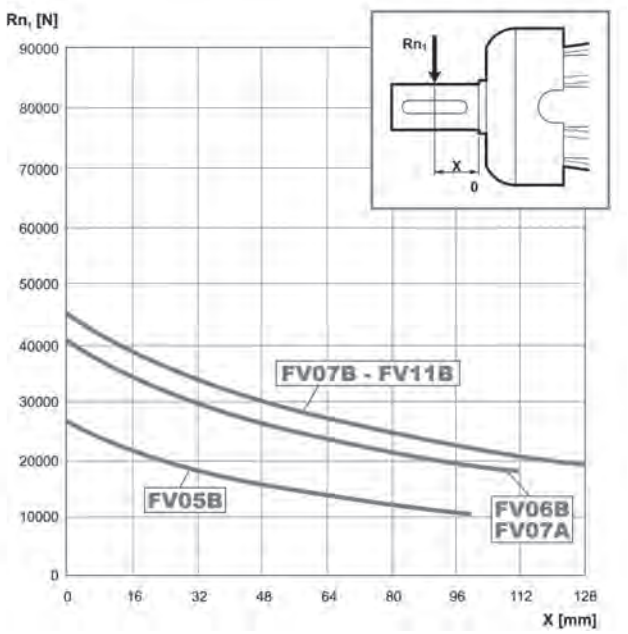

Load corrective factor fh_1 on shafts	$Fh_1 = n_1 \cdot h$	250000	500000	1000000	2000000	5000000	10000000
	fh_1	**1**	**0.79**	**0.63**	**0.50**	**0.37**	**0.29**

319 L

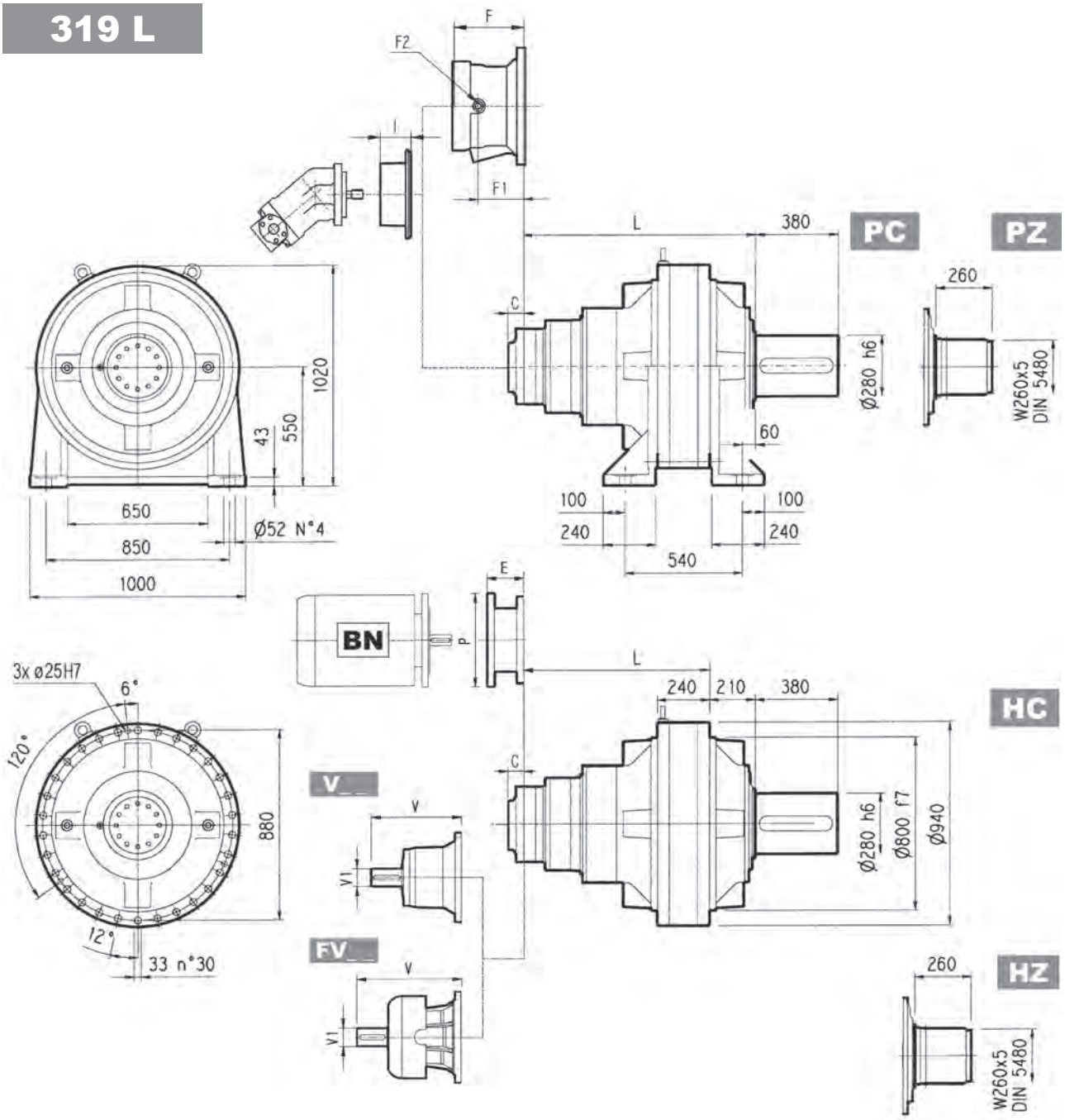

	L				Kg			
	PC - PZ	HC - HZ	FZ - FZP	FP	PC - PZ	HC - HZ	FZ - FZP	FP
319 L1	395	185	185	185	2100	1800	1700	1700
319 L2	778	568	568	568	2350	2050	1950	1950
319 L3	990	780	780	780	2435	2135	2035	2035
319 L4	1123	913	913	913	2480	2180	2080	2080

	V	V1	Kg	V	V1	Kg	V	V1	Kg	V	V1	Kg	C	Input	I	F	F1	F2	Type	Input	Kg
319 L1	—	—	—	—	—	—	—	—	—	—	—	—	245	G		—	—	—	—	—	—
319 L2	556	120	125	—	—	—	—	—	—	—	—	—	116	E		—	—	—	—	—	—
319 L3	348	80	55	—	—	—	456	80	85	—	—	—	81	D	457	232	185	1/4 G	6	B	28
319 L4	315	80	35	313	60	28	375	80	48	363	60	34	51	B		201	153	1/4 G	6	B	28

319 L

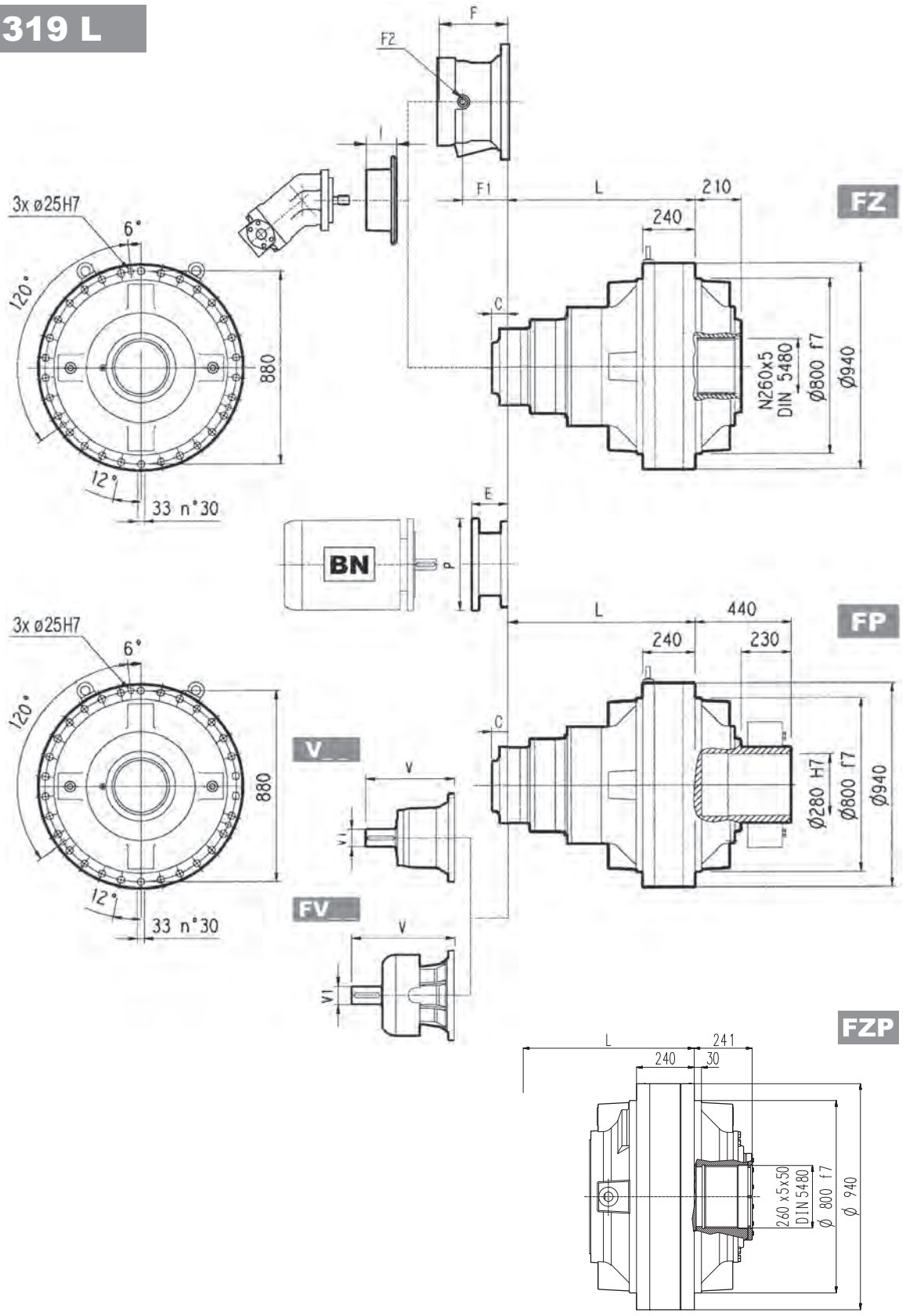

FP | M_{2max} = 480000 Nm

	P180		P200		P225		P250	
	E	P	E	P	E	P	E	P
319 L3	—	—	267	400	297	450	297	550
319 L4	195	350	186	400	216	450	216	550

319 R

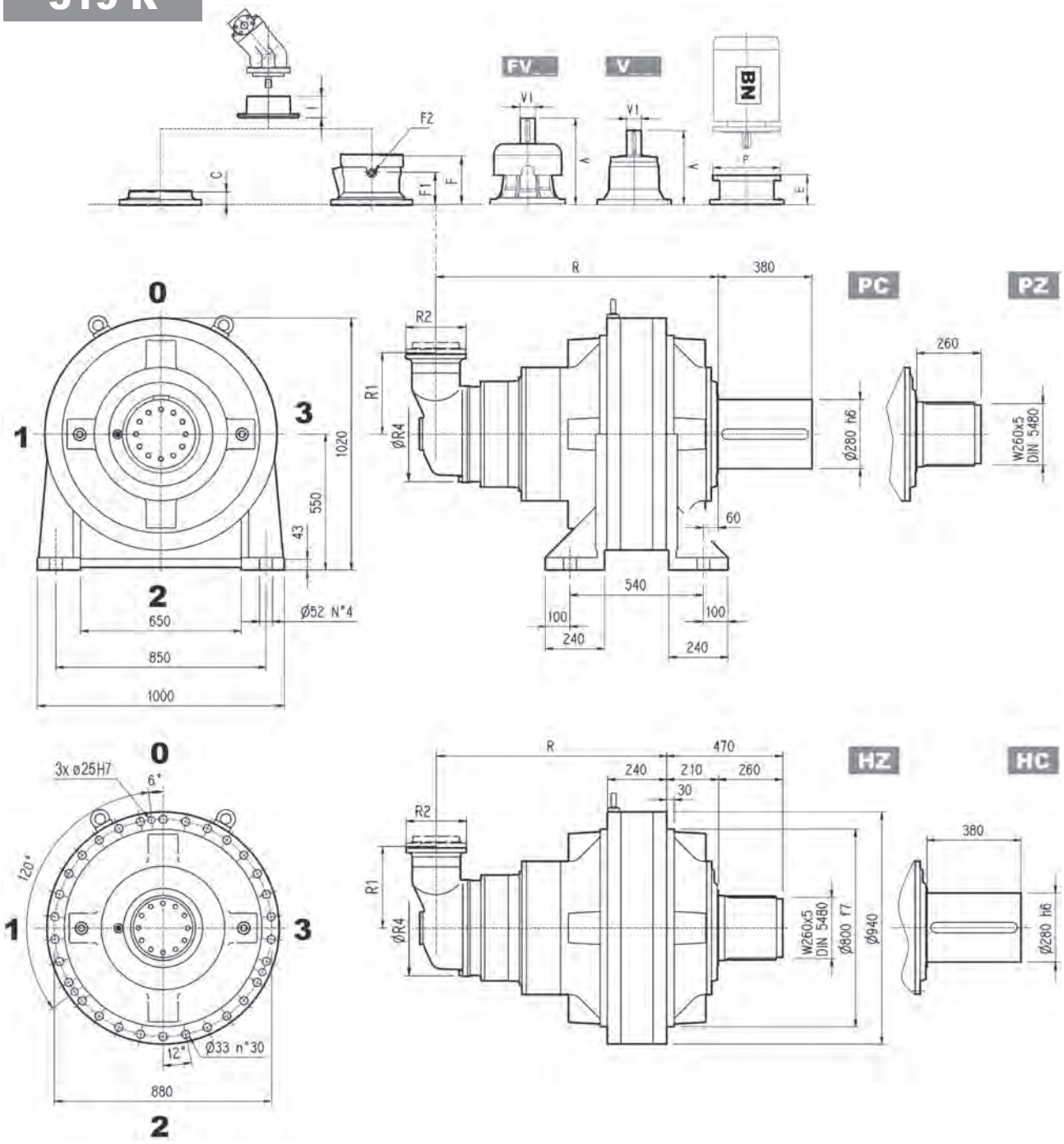

	R				R1	R2	R4	Kg			
	PC-PZ	HC-HZ	FZ - FZP	FP				PC-PZ	HC-HZ	FZ - FZP	FP
319 R4 (B)	1215	1005	1005	1005	345	292	400	2560	2260	2160	2160
319 R4 (C)	1215	1005	1005	1005	390	292	480	2580	2280	2180	2180

	V	V1	Kg	V	V1	Kg	V	V1	Kg	V	V1	Kg	C	Input	I	F	F1	F2	Type	Input	Kg
319 R4 (B)	307	60	23	—	—	—	357	60	28	—	—	—	45	B	457	195	147	1/4 G	6	B	28
319 R4 (C)	307	60	23	—	—	—	357	60	28	—	—	—	45	B		195	147	1/4 G	6	B	28

319 R

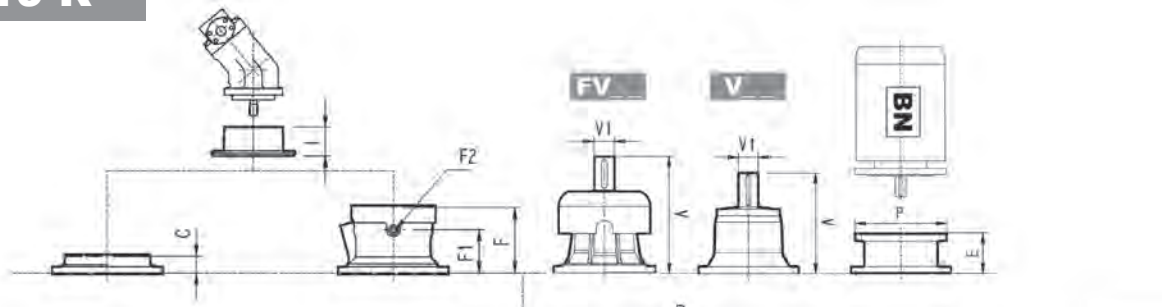

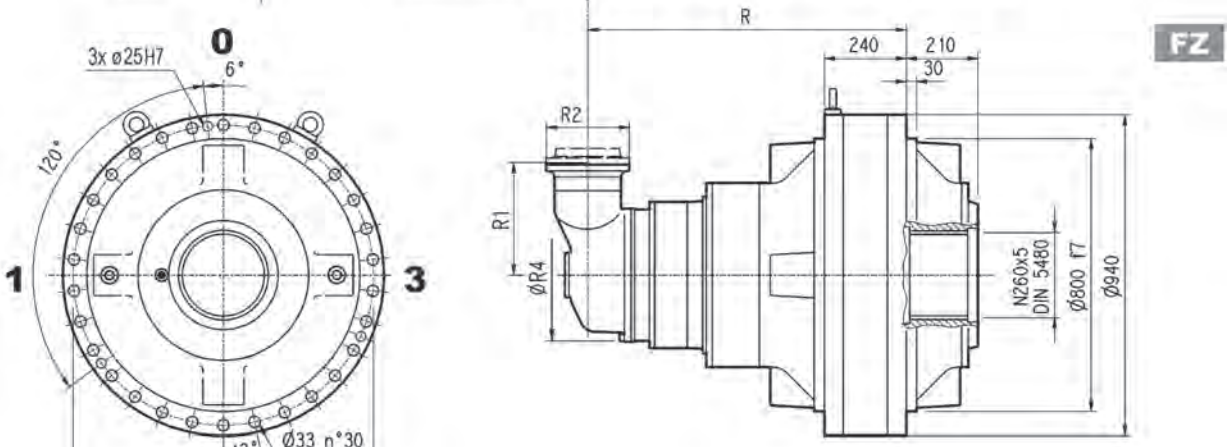

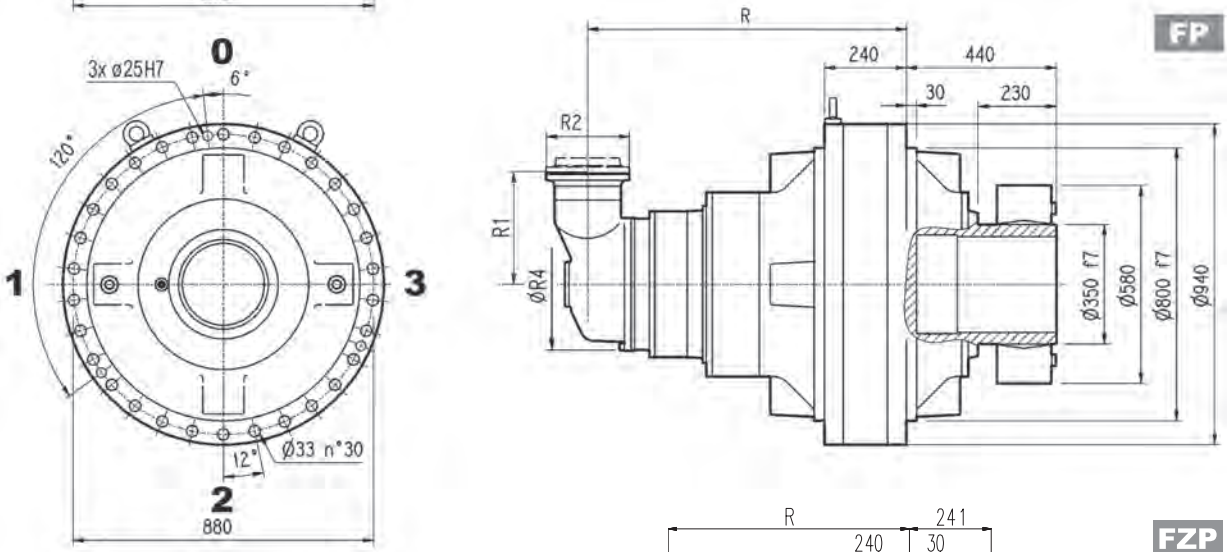

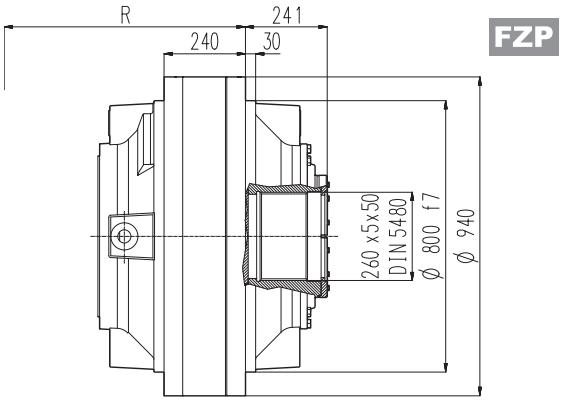

FP M_{2max} = 480000 Nm

	P132		P160		P180		P200		P225		P250	
	E	P	E	P	E	P	E	P	E	P	E	P
319 R4 (B)	—	—	—	—	152	350	182	400	212	450	193	550
319 R4 (C)	—	—	—	—	152	350	182	400	212	450	193	550

3/V 19 L4

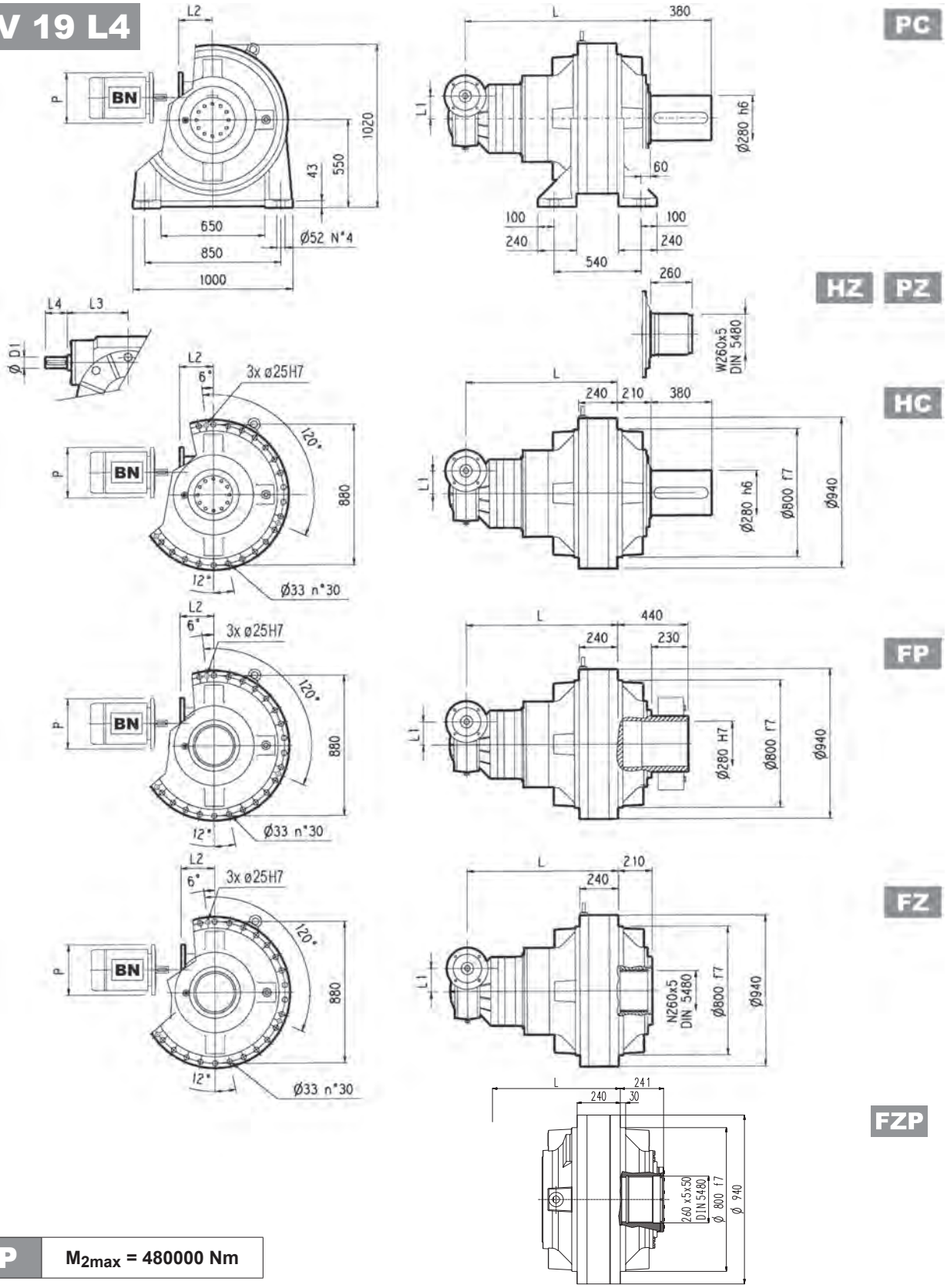

FP M_{2max} = 480000 Nm

	L				L1	D1	L3	L4	Kg			
	PC - PZ	HC - HZ	FZ - FZP	FP					PC - PZ	HC - HZ	FZ - FZP	FP
3/V 19 L4	1210	1000	1000	1000	210	48	230	110	2650	2350	2250	2250

	P132		P160		P180		P200		P225	
	L2	P	L2	P	L2	P	L2	P	L2	P
3/V 19 L4	485	300	460	350	460	350	485	400	490	450

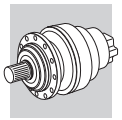

319 L | 319 R | 3/V 19 L4

HC

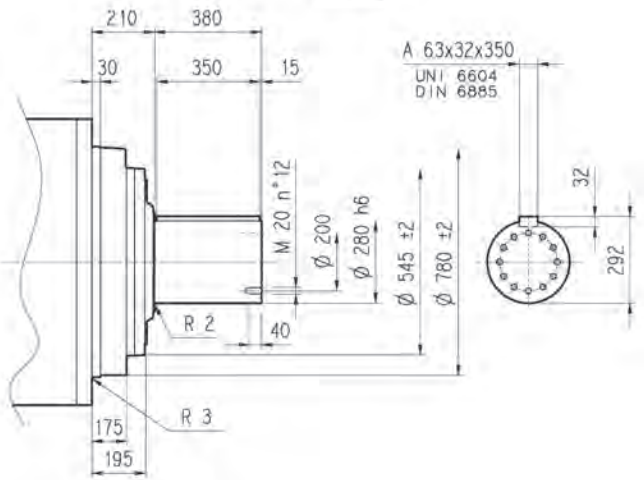

PC

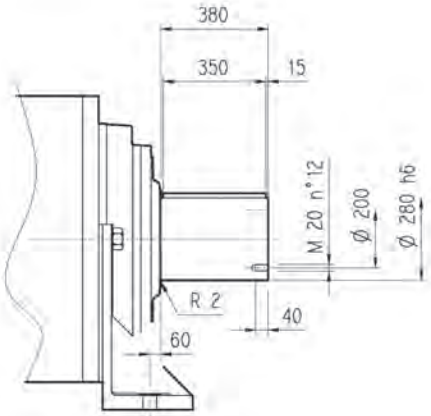

HZ

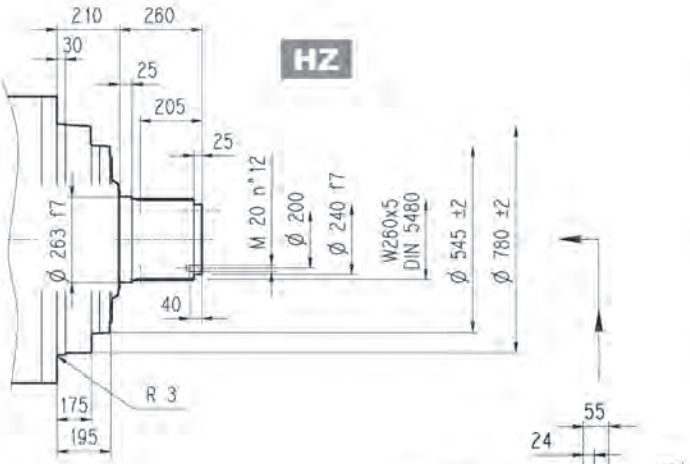

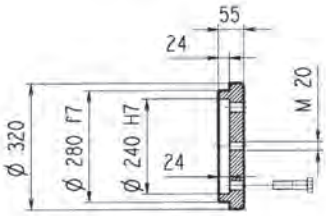

FZ

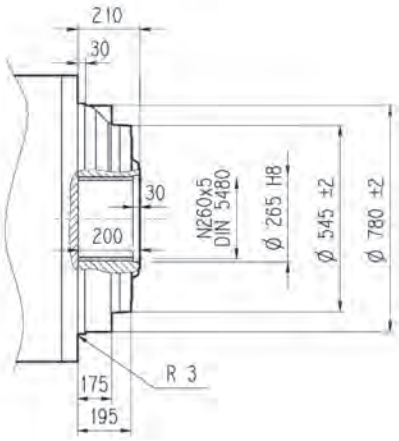

FP

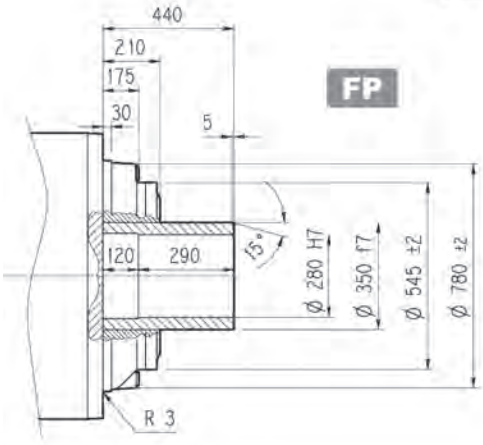

FZP

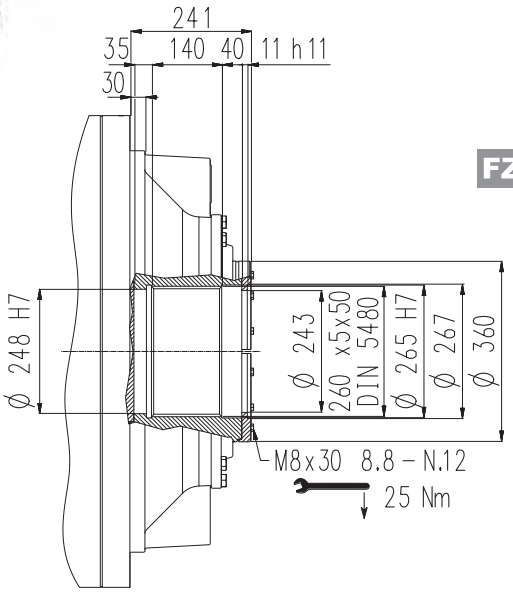

FP | M_{2max} = 480000 Nm

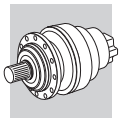

319 L | 319 R | 3/V 19 L4

Flange

W0A

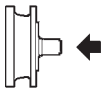

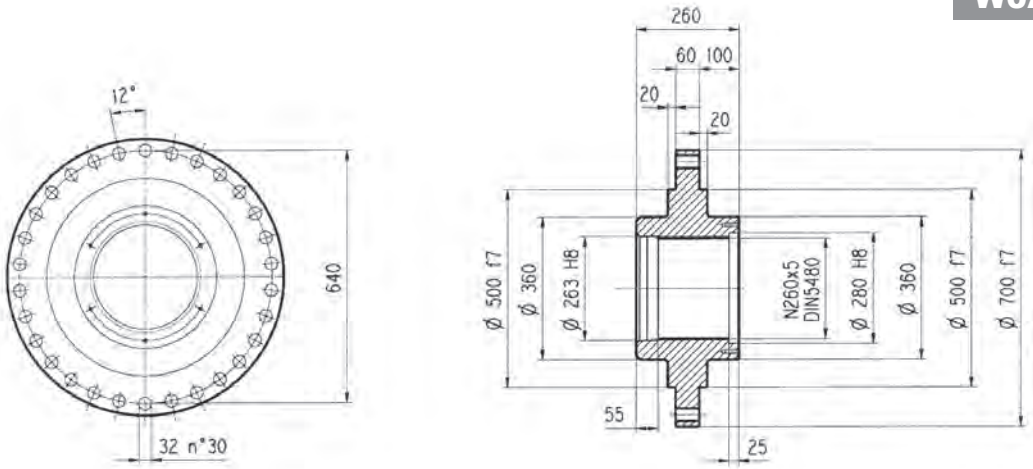

Material: Steel C40

Sleeve coupling

M0A

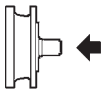

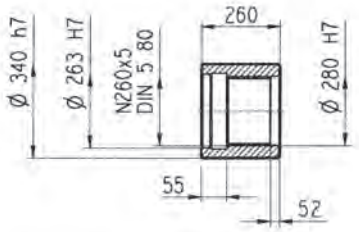

Material: Steel 16CrNi4

Shrink disc

G0A

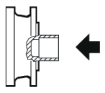

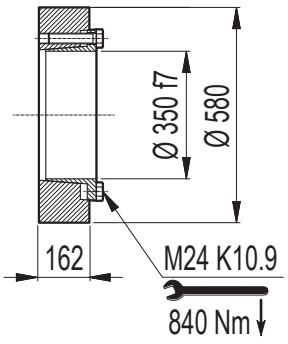

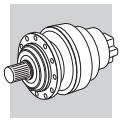

319 L 319 R

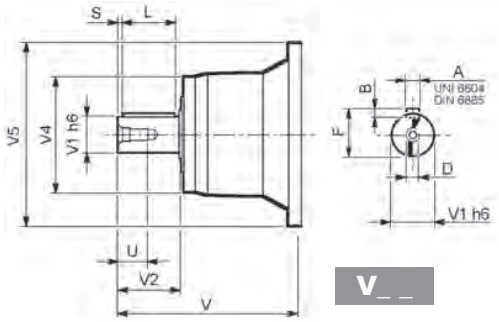

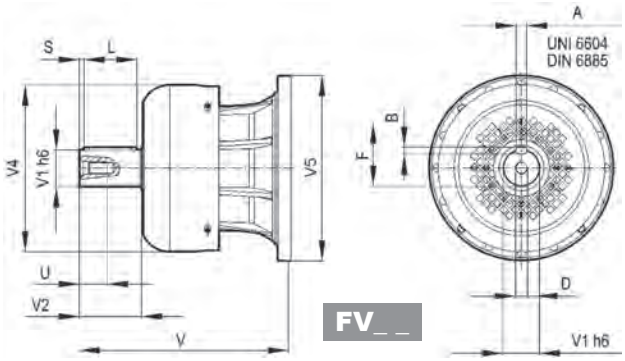

		V	V1	V2	V4	V5	A	B	F	L	S	D	U
319 L2	**V15B**	523	120	210	320	542	32	18	127	180	15	M24	50
319 L3	**V11B**	348	80	130	200	428	22	14	85	110	10	M16	36
	FV11B	456	80	130	347.5	428	22	14	85	110	10	M16	36
319 L4	**V07B**	315	80	130	200	345	22	14	85	110	10	M16	36
	FV07B	375	80	130	347.5	348	22	14	85	110	10	M16	36
	V07A	313	60	105	155	345	18	11	64	90	7.5	M16	36
	FV07A	363	60	105	309	348	18	11	64	90	7.5	M16	36
319 R4 (B) (C)	**V06B**	307	60	105	155	292	18	11	64	90	7.5	M16	36
	FV06B	357	60	105	309	292	18	11	64	90	7.5	M16	36

319 L 319 R

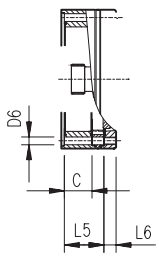

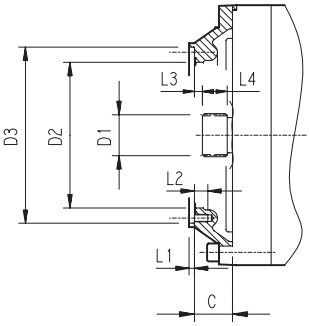

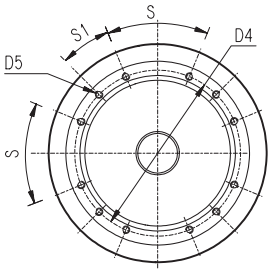

		C	D1	D2	D3	D4	D5	D6	L1	L2	L3	L4	L5	L6	S	S1	Input
319 L1	**V9AG**	245	150x5x28 DIN 5480	444	474 g7	503	M20 n°20	20	5	40	20	82	—	—	30°	15°	G
319 L2	**V9AE**	116	100x94 DIN 5482	340	412 H7	390	M16 n°18	—	7	30	8	55	—	—	20°	20°	E
319 L3	**V9AD**	81	80x74 DIN 5482	270	335 H7	314	M16 n°8	—	5	30	8.5	40	—	—	60°	30°	D
319 L4	**V9AB**	51	58x53 DIN 5482	195	236 H7	222	M10 n°12	—	4	18	11	22	—	—	45°	22.5°	B
319 R4	**V9AA**	37	40x36 DIN 5482	140	178 H7	165	M12 n°8	11	4	18	9	18	—	—	45°	45°	A
319 R4 (B) (C)	**V9AB**	45	58x53 DIN 5482	195	236 H7	222	M10 n°12	—	4	18	11	22	—	—	45°	22.5°	B

3/V 19 L4

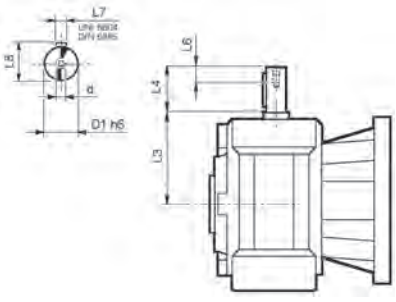

	D1 h6	L3	L4	L6	L7	L8	d
3/V 19 L4_HS	48	230	110	40	14	51.5	M16

Bonfiglioli Riduttori

319 L | 319 R | 3/V 19 L4

Permissible radial and axial loads on output shaft with $Fh_2 : n_2 \cdot h = 100000$

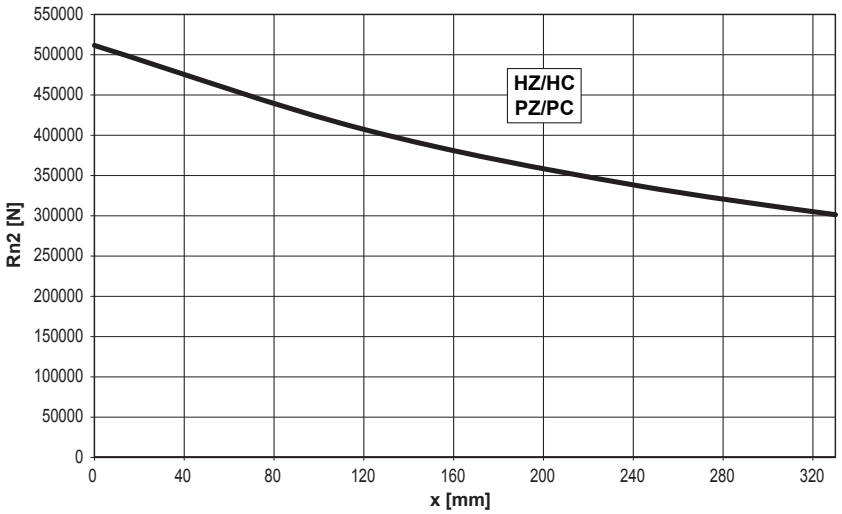

	An_2 (+)	An_2 (-)
HZ - HC PZ - PC	250000	225000

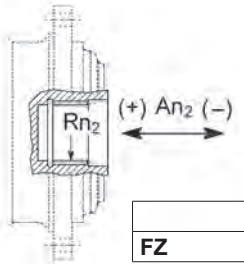

	Rn_2	An_2 (+/-)
FZ	92832	92832

Load corrective factor fh_2 on shafts	$Fh_2 = n_2 \cdot h$		10000	25000	50000	100000	500000	1000000
	fh_2	FZ	**2.15**	**1.59**	**1.26**	**1.00**	**0.58**	**0.46**
		HZ - HC - PZ - PC	**1.75**	**1.52**	**1.23**	**1.00**	**0.62**	**0.50**

Permissible radial loads on input shaft with $Fh_1 : n_1 \cdot h = 250000$

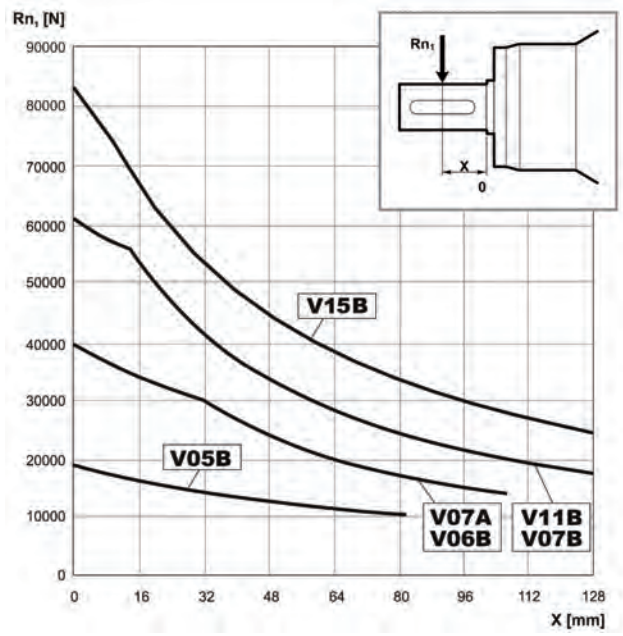

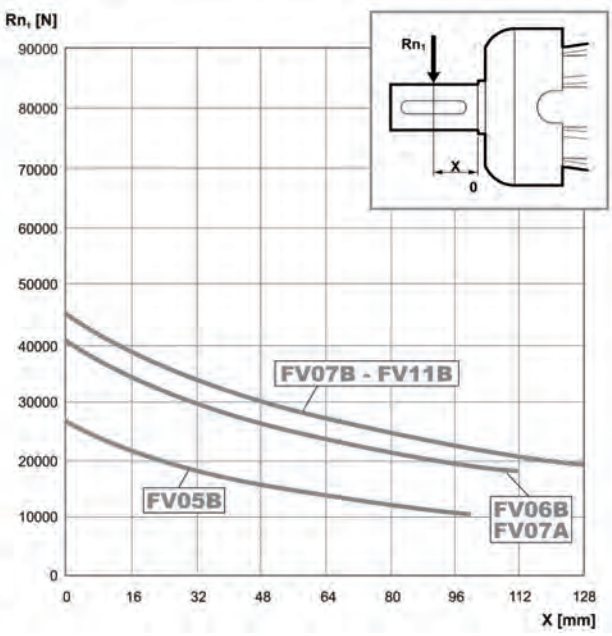

Load corrective factor fh_1 on shafts	$Fh_1 = n_1 \cdot h$	250000	500000	1000000	2000000	5000000	10000000
	fh_1	**1**	**0.79**	**0.63**	**0.50**	**0.37**	**0.29**

321 L

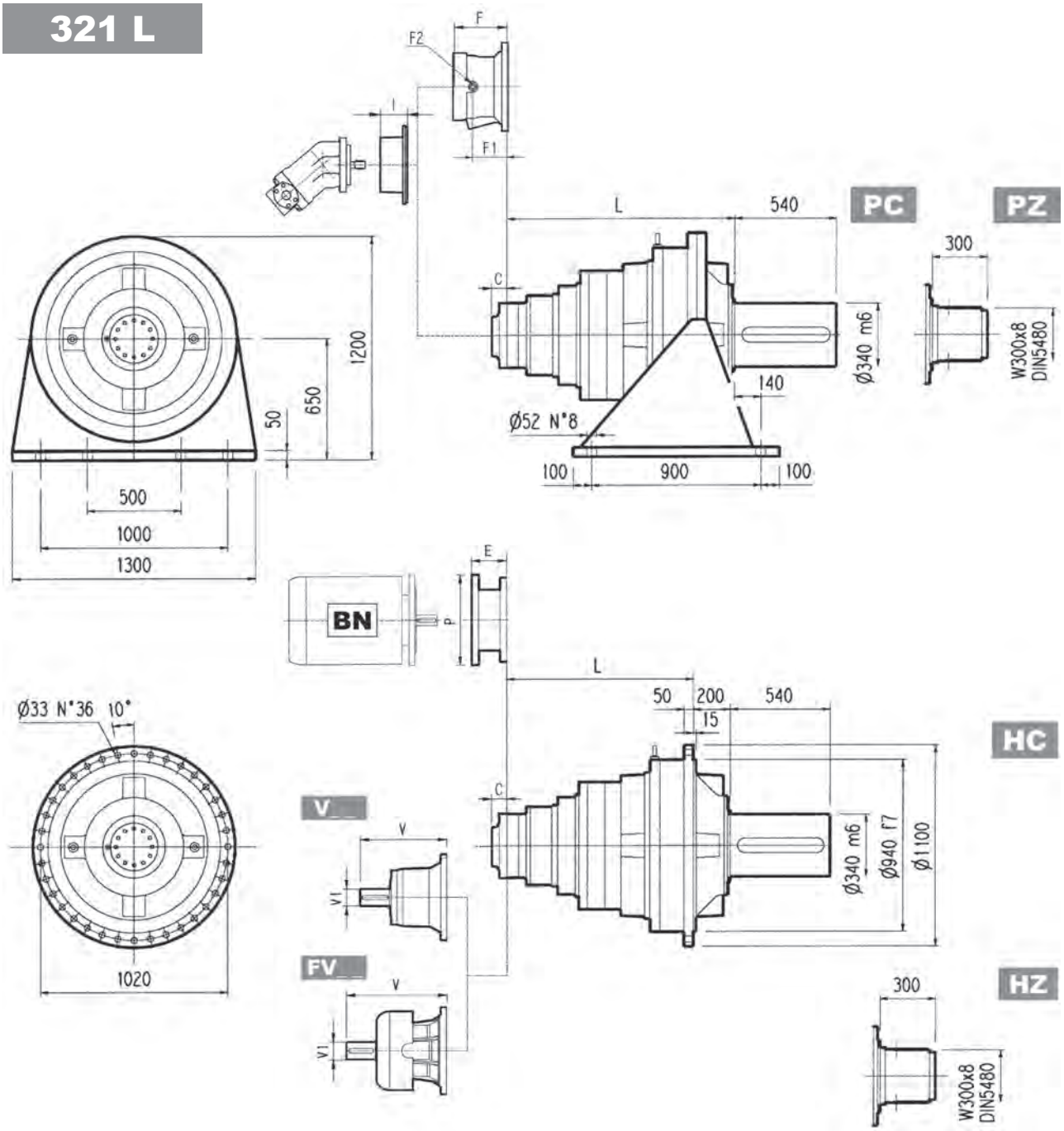

	L				Kg			
	PC - PZ	HC - HZ	FZ - FZP	FP	PC - PZ	HC - HZ	FZ - FZP	FP
321 L2	795	595	595	595	3000	2700	2600	2600
321 L3	1104	904	904	904	3120	2820	2720	2720
321 L4	1253	1053	1053	1053	3180	2880	2780	2780

	V	V1	Kg	V	V1	Kg	V	V1	Kg	V	V1	Kg	C	Input	I	F	F1	F2	Type	Input	Kg
321 L2	—	—	—	—	—	—	—	—	—	—	—	—	181	F		—	—	—	—	—	—
321 L3	343	80	55	—	—	—	451	80	71	—	—	—	75	D		—	—	—	—	—	—
321 L4	315	80	35	313	60	28	375	80	48	363	60	34	51	B	457	201	153	1/4 G	6	B	28

321 L

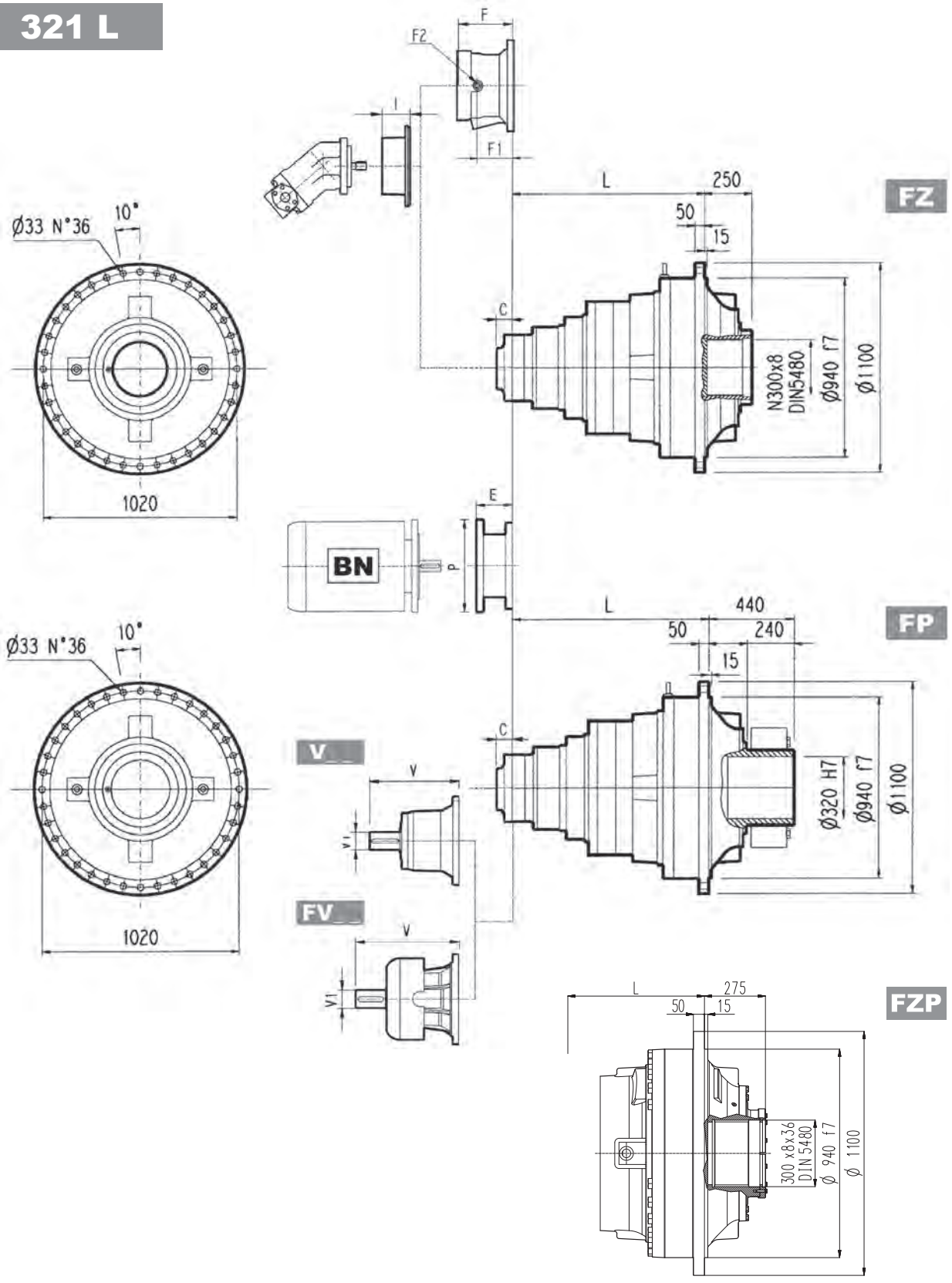

FP M_{2max} = 720000 Nm

	P180		P200		P225		P250	
	E	P	E	P	E	P	E	P
321 L4	195	350	186	400	216	450	216	550

321 R

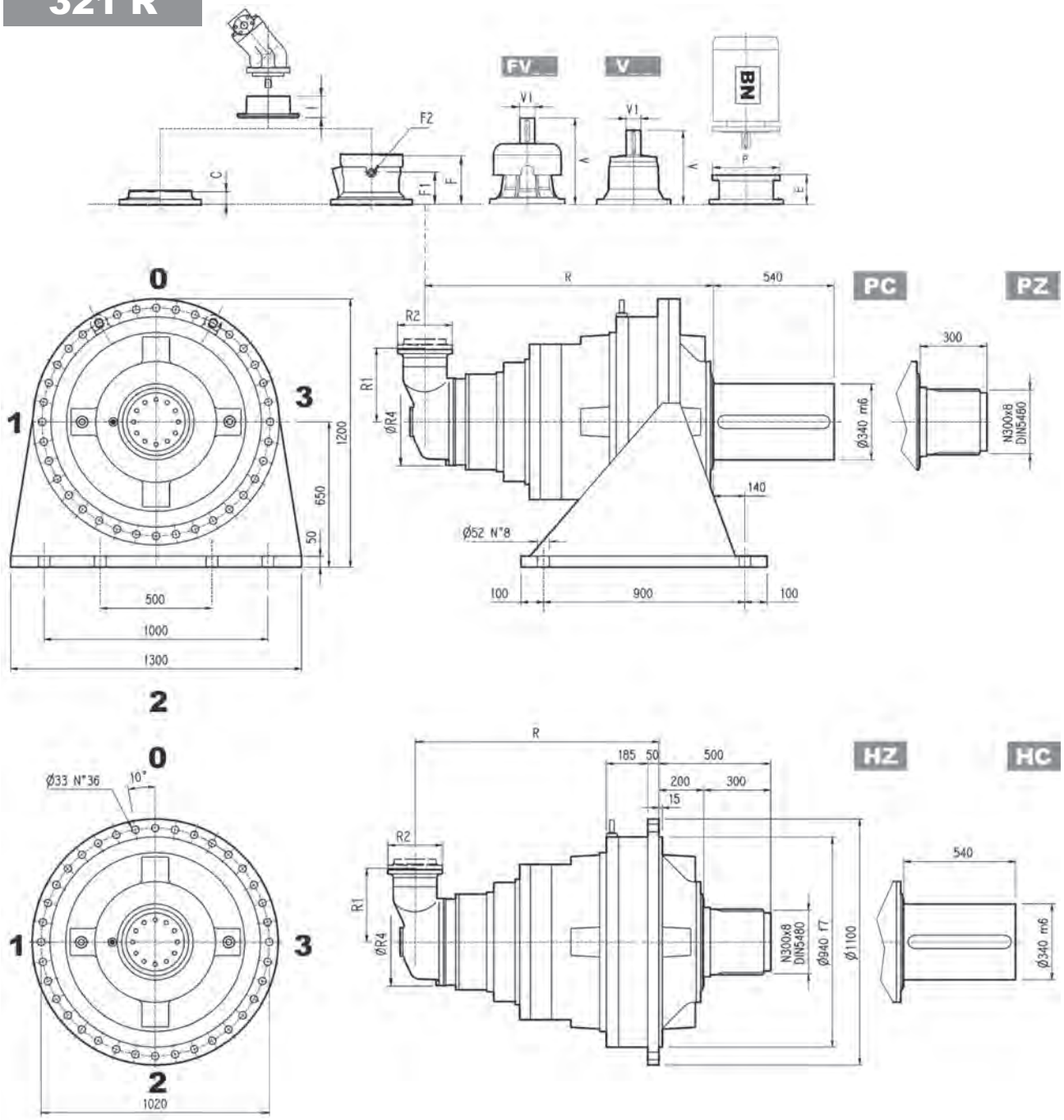

	R				R1	R2	R4	Kg			
	PC-PZ	HC-HZ	FZ - FZP	FP				PC-PZ	HC-HZ	FZ - FZP	FP
321 R4 (B)	1334	1134	1134	1134	345	292	400	3250	2950	2850	2850
321 R4 (C)	1334	1134	1134	1134	390	292	480	3260	2960	2860	2860

	V	V1	Kg	V	V1	Kg	V	V1	Kg	V	V1	Kg	C	Input	I	F	F1	F2	Type	Input	Kg
321 R4 (B)	307	60	23	—	—	—	357	60	28	—	—	—	45	B	457	195	147	1/4 G	6	B	28
321 R4 (C)	307	60	23	—	—	—	357	60	28	—	—	—	45	B		195	147	1/4 G	6	B	28

321 R

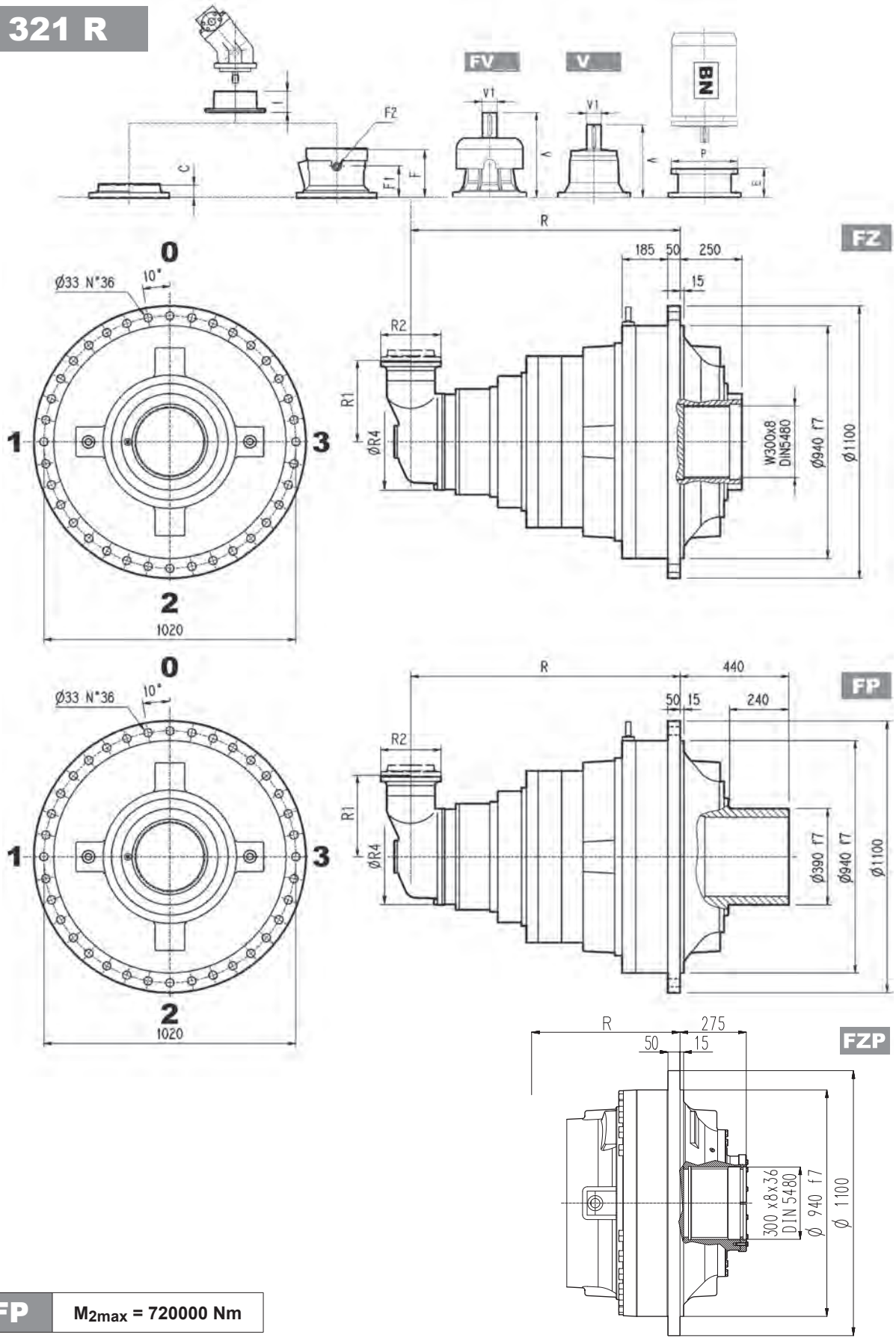

FP M_{2max} = 720000 Nm

	P132		P160		P180		P200		P225		P250	
	E	P	E	P	E	P	E	P	E	P	E	P
321 R4 (B)	—	—	—	—	152	350	182	400	212	450	193	550
321 R4 (C)	—	—	—	—	152	350	182	400	212	450	193	550

3/V 21 L4

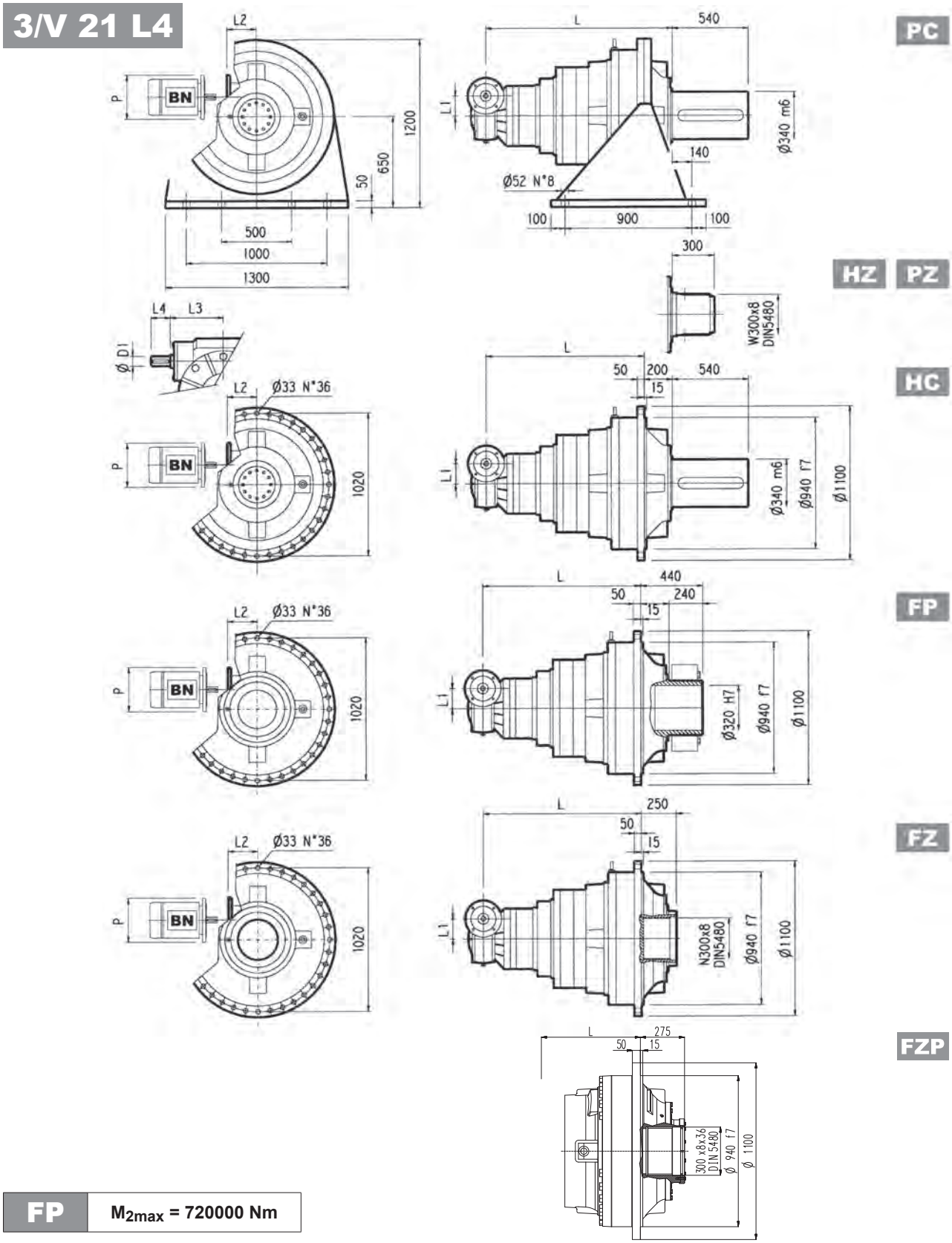

FP M_{2max} = 720000 Nm

	L				L1	L2	D1	L3	L4	Kg			
	PC - PZ	HC - HZ	FZ - FZP	FP						PC - PZ	HC - HZ	FZ - FZP	FP
3/V 21 L4	1374	1174	1174	1174	250	—	55	276	110	3430	3130	3030	3030

	P132		P160		P180		P200		P225	
	L2	P	L2	P	L2	P	L2	P	L2	P
3/V 21 L4	531	300	506	350	506	350	531	400	536	450

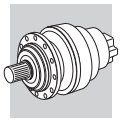

321 L | 321 R | 3/V 21 L4

HC

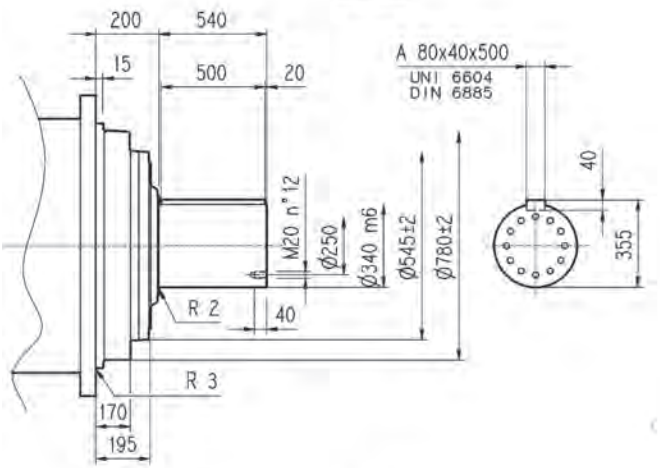

PC

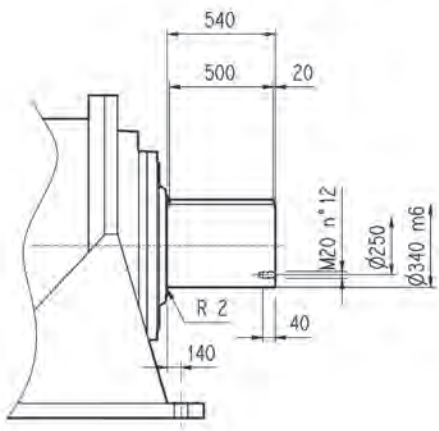

HZ

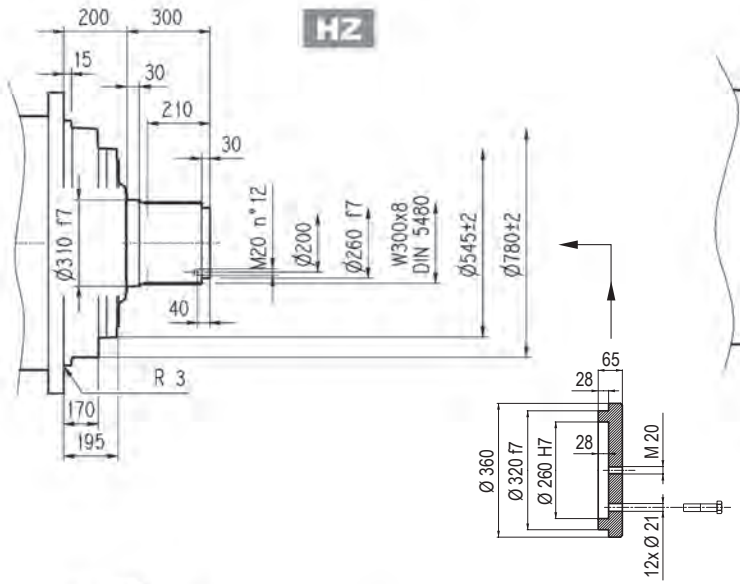

FZ

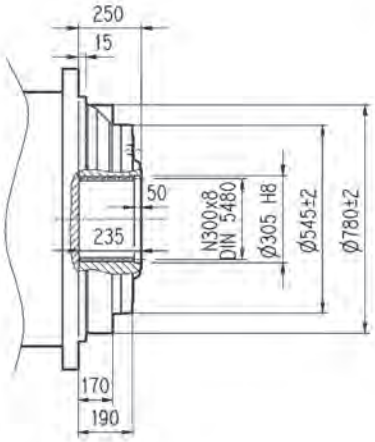

FP

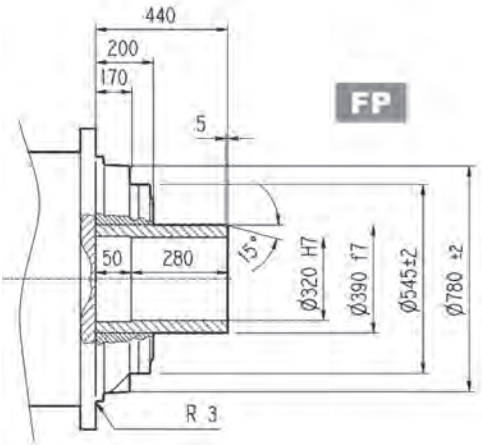

FZP

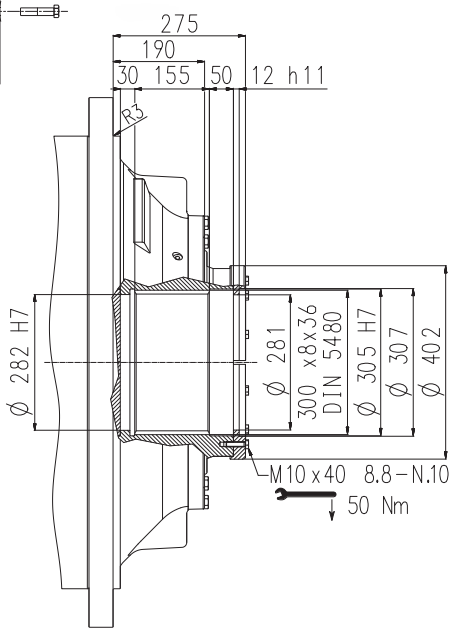

FP | M_{2max} = 720000 Nm

Flange

W0A

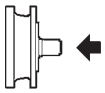

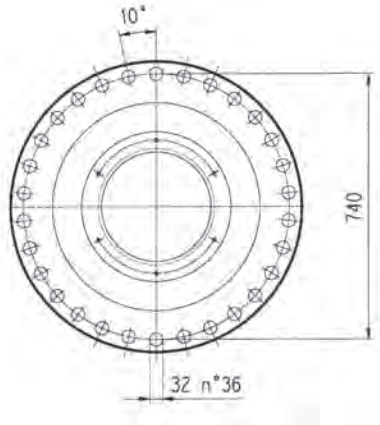

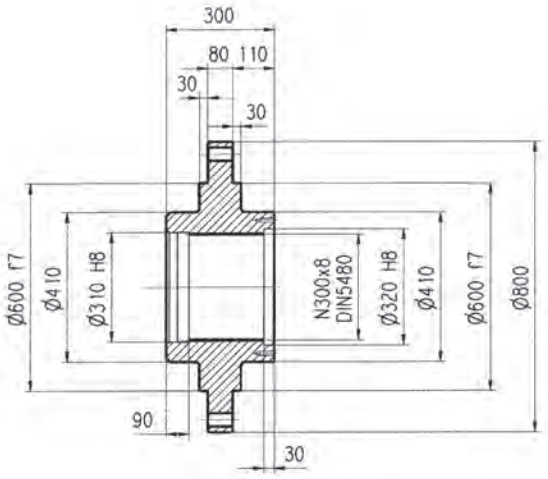

Material: Steel C40

Shrink disc

G0A

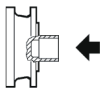

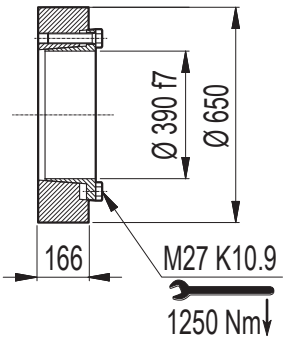

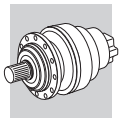

321 L 321 R

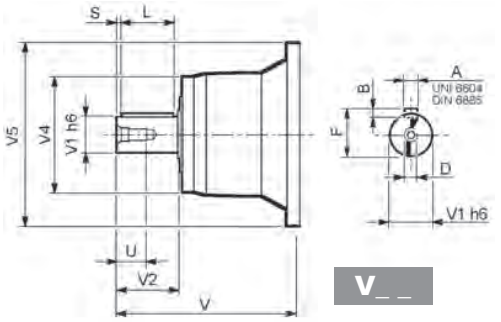

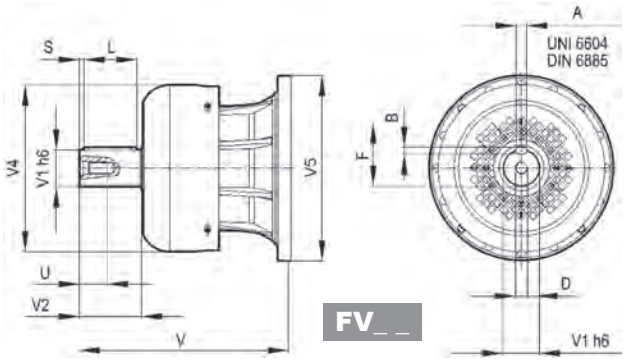

		V	V1	V2	V4	V5	A	B	F	L	S	D	U
321 L3	**V11B**	343	80	130	200	445	22	14	85	110	10	M16	36
	FV11B	451	80	130	347.5	445	22	14	85	110	10	M16	36
321 L4	**V07B**	315	80	130	200	345	22	14	85	110	10	M16	36
	FV07B	375	80	130	347.5	348	22	14	85	110	10	M16	36
	V07A	313	60	105	155	345	18	11	64	90	7.5	M16	36
	FV07A	363	60	105	309	348	18	11	64	90	7.5	M16	36
321 R4 (B) (C)	**V06B**	307	60	105	155	292	18	11	64	90	7.5	M16	36
	FV06B	357	60	105	309	292	18	11	64	90	7.5	M16	36

321 L 321 R

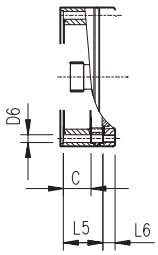

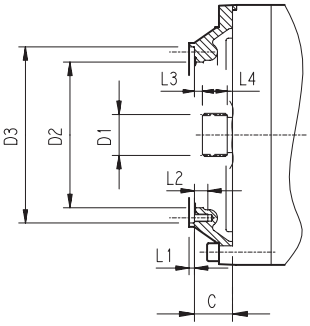

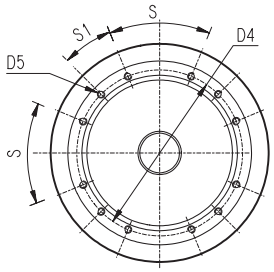

		C	D1	D2	D3	D4	D5	D6	L1	L2	L3	L4	L5	L6	S	S1	Input
321 L1	Please consult Bonfiglioli Technical Service																
321 L2	**V9AF**	181	120x3 DIN 5480	365	390 f7	415	M16 n°18	—	4	30	3	65	—	—	20°	20°	F
321 L3	**V9AD**	75	80x74 DIN 5482	270	335 H7	314	M16 n°8	—	5	30	9.5	40	—	—	60°	30°	D
321 L4	**V9AB**	51	58x53 DIN 5482	195	236 H7	222	M10 n°12	—	4	18	11	22	—	—	45°	22.5°	B
321 R4 (B) (C)	**V9AB**	45	58x53 DIN 5482	195	236 H7	222	M10 n°12	—	4	18	11	22	—	—	45°	22.5°	B

3/V 21 L4

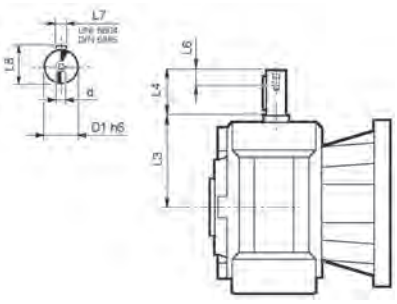

	D1 h6	L3	L4	L6	L7	L8	d
3/V 21 L4_HS	55	276	110	40	16	59	M16

321 L | 321 R | 3/V 21 L4

Permissible radial and axial loads on output shaft with $Fh_2 : n_2 \cdot h = 100000$

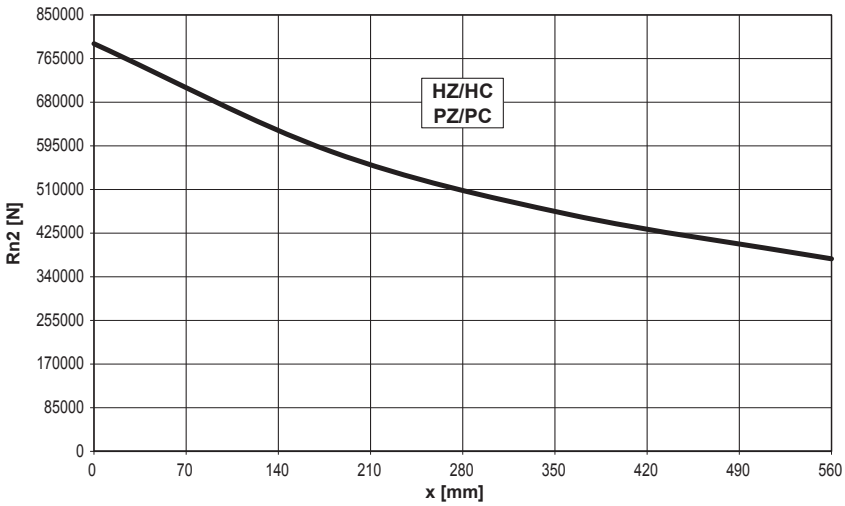

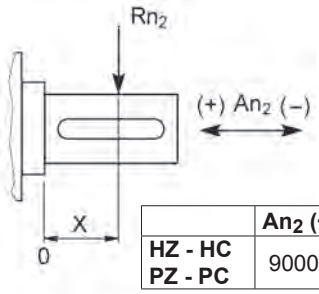

	An_2 (+)	An_2 (-)
HZ - HC PZ - PC	90000	120000

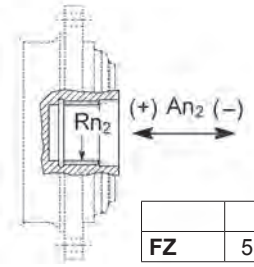

	Rn_2	An_2 (+/-)
FZ	556991	83549

Load corrective factor fh_2 on shafts	$Fh_2 = n_2 \cdot h$	10000	25000	50000	100000	500000	1000000
	fh_2 FZ	**2.15**	**1.59**	**1.26**	**1.00**	**0.58**	**0.46**
	fh_2 HZ - HC - PZ - PC	**1.54**	**1.35**	**1.23**	**1.00**	**0.62**	**0.50**

Permissible radial loads on input shaft with $Fh_1 : n_1 \cdot h = 250000$

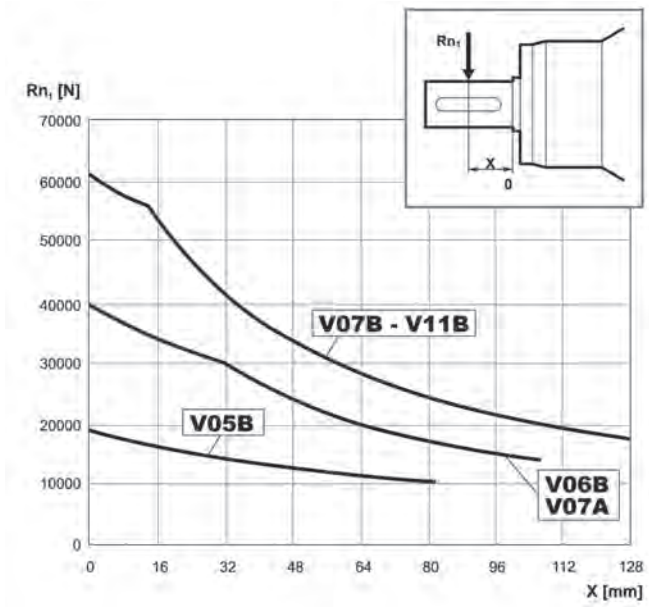

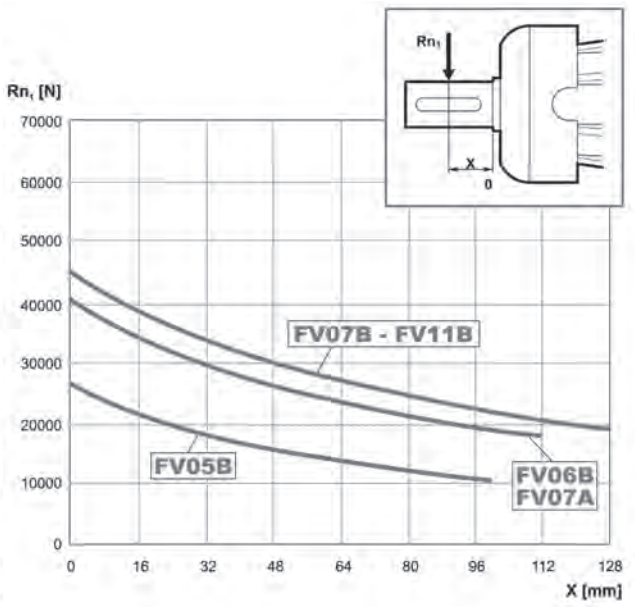

Load corrective factor fh_1 on shafts	$Fh_1 = n_1 \cdot h$	250000	500000	1000000	2000000	5000000	10000000
	fh_1	**1**	**0.79**	**0.63**	**0.50**	**0.37**	**0.29**

323 L

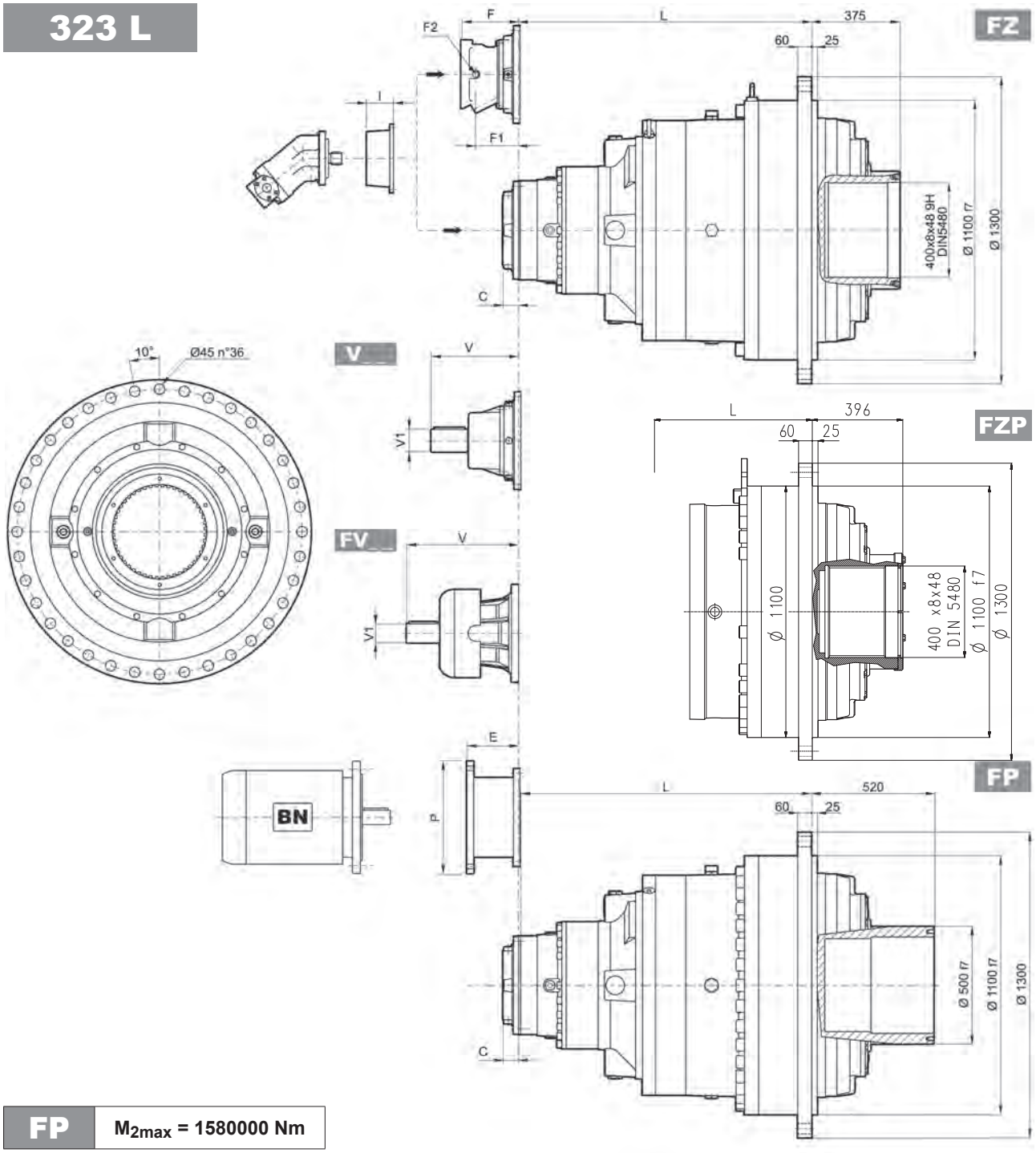

FP M_{2max} = 1580000 Nm

	L		Kg							
	FZ - FZP	FP	FZ - FZP	FP	V	V1	Kg	V	V1	Kg
323 L1	Please consult Bonfiglioli Technical Service									
323 L2	666	666	4450	4550	—	—	—	—	—	—
323 L3	1049	1049	4750	4850	556	120	125	—	—	—
323 L4	1261	1261	4900	5000	315	80	35	456	80	85

										P200		P225		P250	
	C	Input	I	F	F1	F2	Type	Input	Kg	E	P	E	P	E	P
323 L1	—	—		—	—	—	—	—	—	—	—	—	—	—	—
323 L2	245	G		—	—	—	—	—	—	—	—	—	—	—	—
323 L3	116	E		—	—	—	—	—	—	—	—	—	—	—	—
323 L4	81	D	457	201	48	1/4 G	6	B	22	267	400	297	450	297	550

Bonfiglioli Riduttori

323 L

FZ

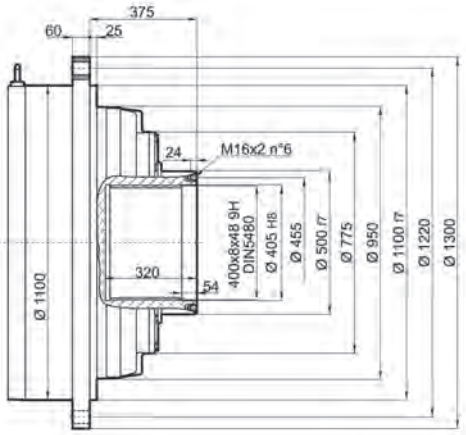

FP

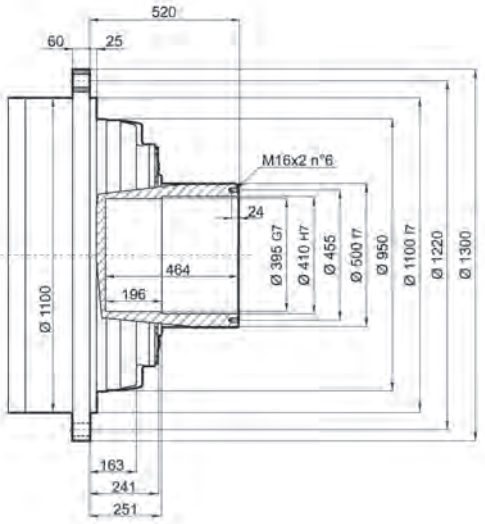

FZP

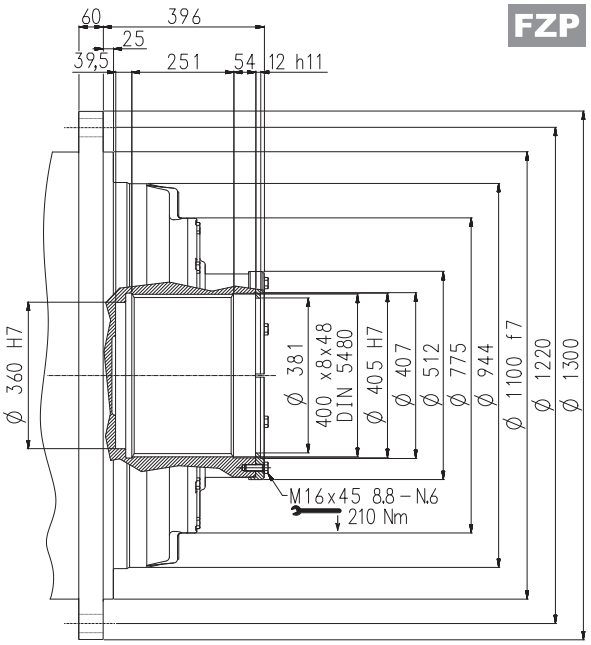

Shrink disc

G0A

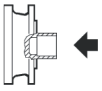

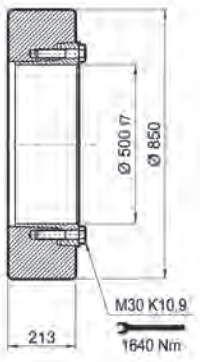

FP M_{2max} = 1580000 Nm

323 L

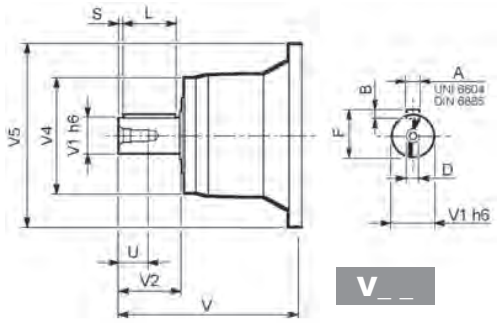

		V	V1	V2	V4	V5	A	B	F	L	S	D	U
323 L3	**V15B**	556	120	210	310	542	32	18	127	180	15	M24	50
323 L4	**V11B**	343	80	130	200	445	22	14	85	110	10	M16	36
	FV11B	451	80	130	347.5	445	22	14	85	110	10	M16	36

323 L

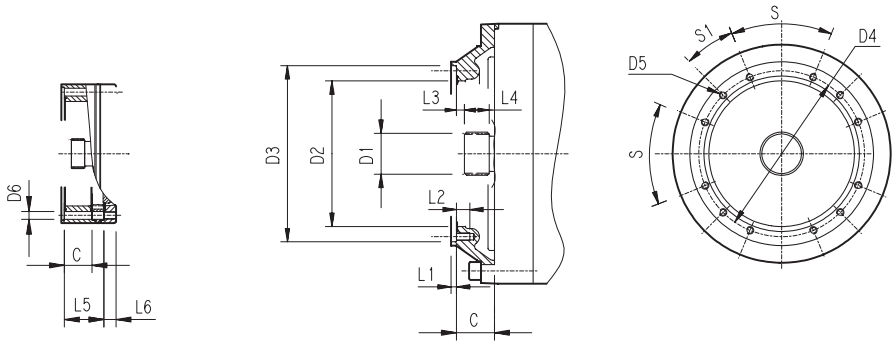

		C	D1	D2	D3	D4	D5	D6	L1	L2	L3	L4	L5	L6	S	S1	Input
323 L1	Please consult Bonfiglioli Technical Service																
323 L2	**V9AG**	245	150x5x28 DIN 5480	444	474 g7	503	M20 n°20	20	5	40	20	82	—	—	30°	15°	G
323 L3	**V9AE**	116	100x94 DIN 5482	340	412 H7	390	M16 n°18	—	7	30	8	55	—	—	20°	20°	E
323 L4	**V9AD**	81	80x74 DIN 5482	270	335 H7	314	M16 n°8	—	5	30	8.5	40	—	—	60°	30°	D

323 L

Permissible radial and axial loads on output shaft with $Fh_2 : n_2 \cdot h = 100000$

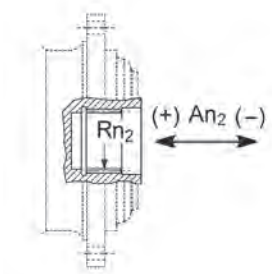

	Rn_2	An_2 (+)	An_2 (-)
FZ	510575	174060	69624

Load corrective factor fh_2 on shafts	$Fh_2 = n_2 \cdot h$		10000	25000	50000	100000	500000	1000000
	fh_2	**FZ**	**2.15**	**1.59**	**1.26**	**1.00**	**0.58**	**0.46**

Permissible radial loads on input shaft with $Fh_1 : n_1 \cdot h = 250000$

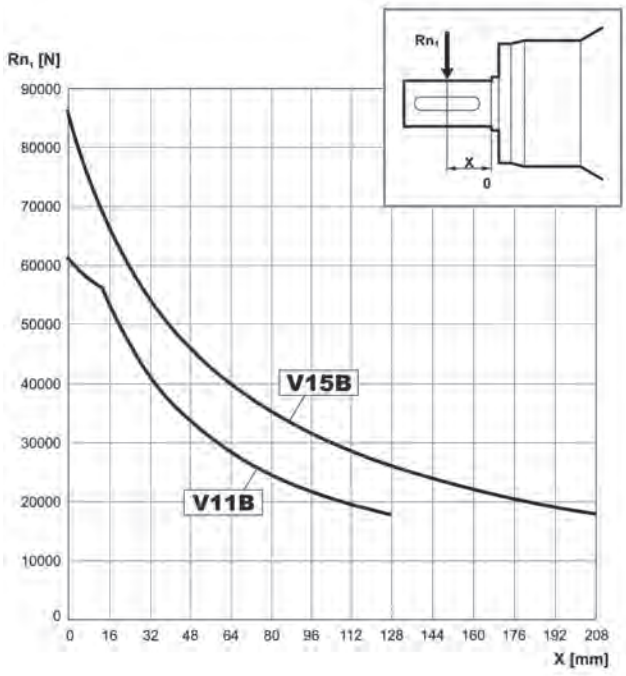

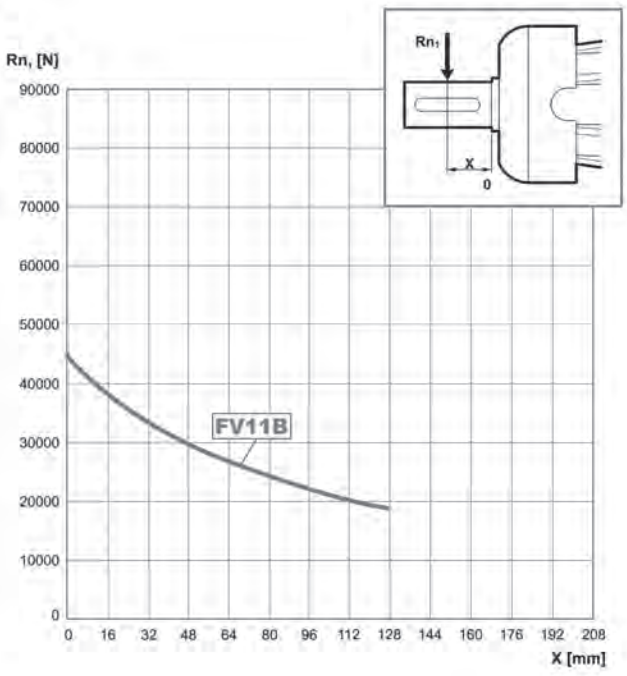

Load corrective factor fh_1 on shafts	$Fh_1 = n_1 \cdot h$	250000	500000	1000000	2000000	5000000	10000000
	fh_1	**1**	**0.79**	**0.63**	**0.50**	**0.37**	**0.29**

325 L

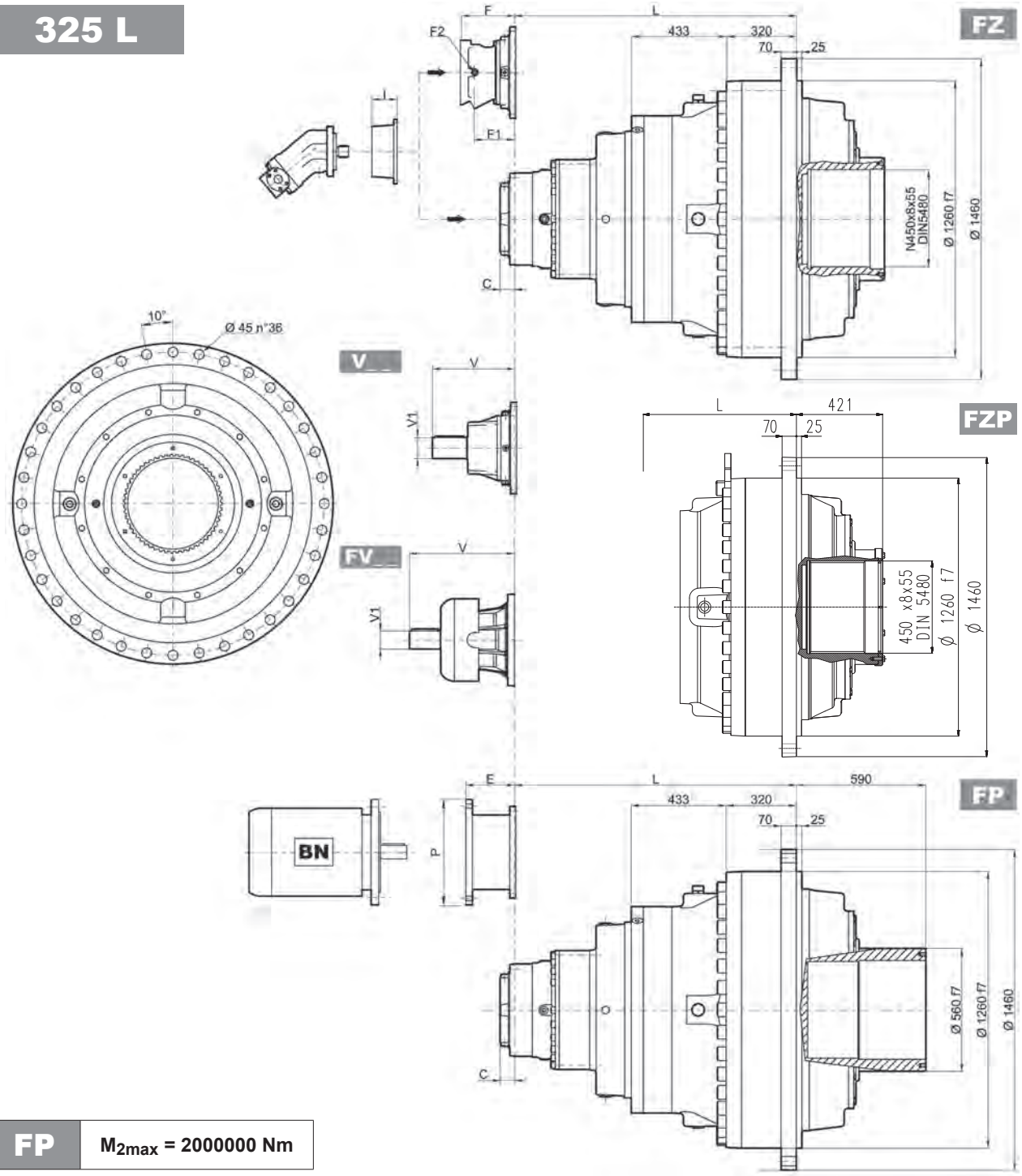

FP M_{2max} = 2000000 Nm

	L		Kg							
	FZ - FZP	FP	FZ - FZP	FP	V	V1	Kg	V	V1	Kg
325 L1	Please consult Bonfiglioli Technical Service									
325 L2	698	698	5700	5900	—	—	—	—	—	—
325 L3	1081	1081	6000	6200	556	120	125	—	—	—
325 L4	1293	1293	6150	6350	315	80	35	456	80	85

										P200		P225		P250	
	C	Input	I	F	F1	F2	Type	Input	Kg	E	P	E	P	E	P
325 L1	—	—	457	—	—	—	—	—	—	—	—	—	—	—	—	—	—
325 L2	245	G		—	—	—	—	—	—	—	—	—	—	—	—	—	—
325 L3	116	E		—	—	—	—	—	—	—	—	—	—	—	—	—	—
325 L4	81	D		201	48	1/4 G	6	B	22	267	400	297	450	297	550

Bonfiglioli Riduttori

325 L

FZ

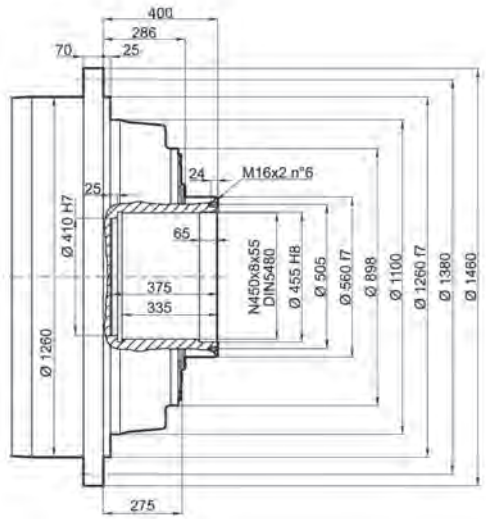

FP

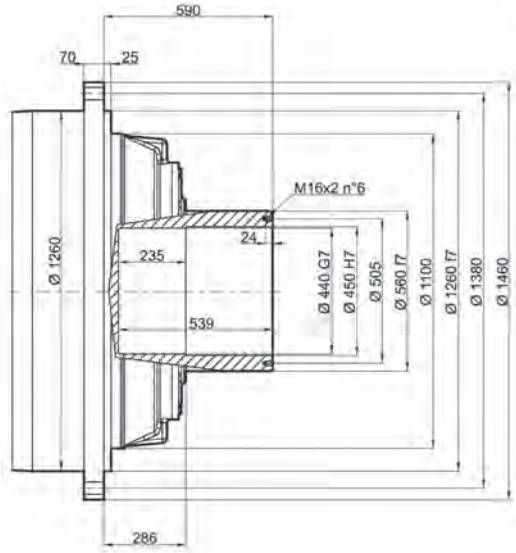

FZP

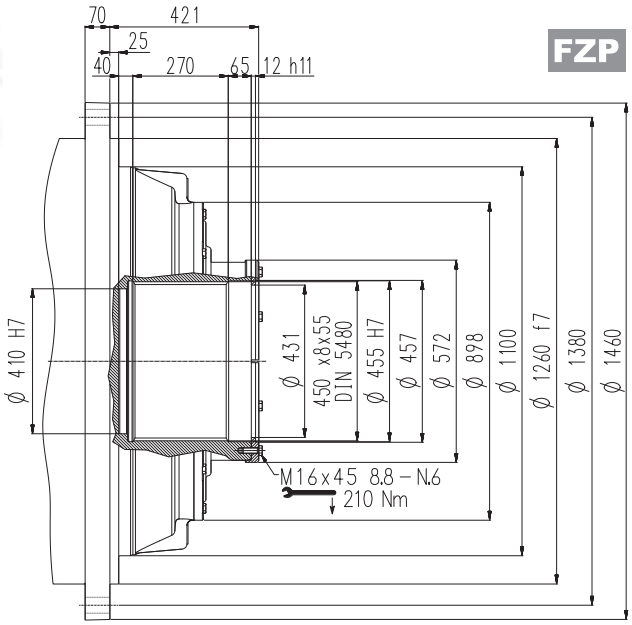

Shrink disc

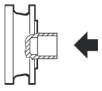

G0A

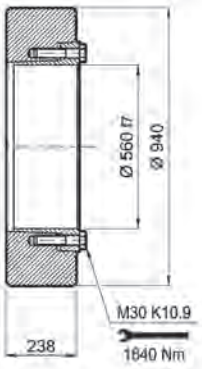

FP M_{2max} = 2000000 Nm

325 L

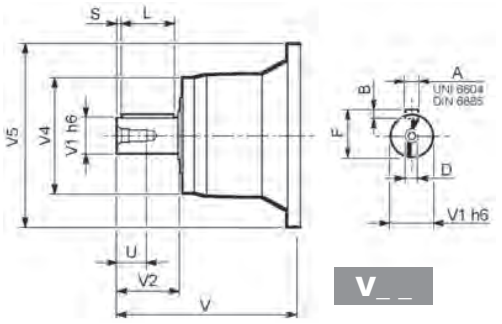

		V	V1	V2	V4	V5	A	B	F	L	S	D	U
325 L3	**V15B**	556	120	210	310	542	32	18	127	180	15	M24	50
325 L4	**V11B**	343	80	130	200	445	22	14	85	110	10	M16	36
	FV11B	451	80	130	347.5	445	22	14	85	110	10	M16	36

325 L

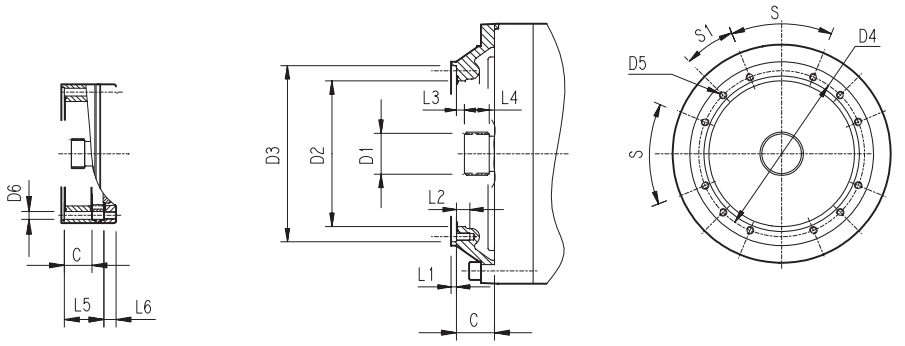

		C	D1	D2	D3	D4	D5	D6	L1	L2	L3	L4	L5	L6	S	S1	Input
325 L1	Please consult Bonfiglioli Technical Service																
325 L2	**V9AG**	245	150x5x28 DIN 5480	444	474 g7	503	M20 n°20	20	5	40	20	82	—	—	30°	15°	G
325 L3	**V9AE**	116	100x94 DIN 5482	340	412 H7	390	M16 n°18	—	7	30	8	55	—	—	20°	20°	E
325 L4	**V9AD**	81	80x74 DIN 5482	270	335 H7	314	M16 n°8	—	5	30	8.5	40	—	—	60°	30°	D

325 L

Permissible radial and axial loads on output shaft with $Fh_2 : n_2 \cdot h = 100000$

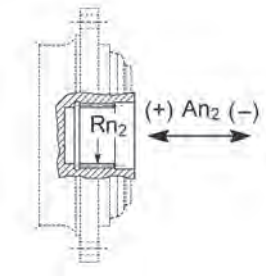

	Rn_2	An_2 (+)	An_2 (-)
FZ	510575	174060	69624

Load corrective factor fh_2 on shafts	$Fh_2 = n_2 \cdot h$		10000	25000	50000	100000	500000	1000000
	fh_2	**FZ**	**2.15**	**1.59**	**1.26**	**1.00**	**0.58**	**0.46**

Permissible radial loads on input shaft with $Fh_1 : n_1 \cdot h = 250000$

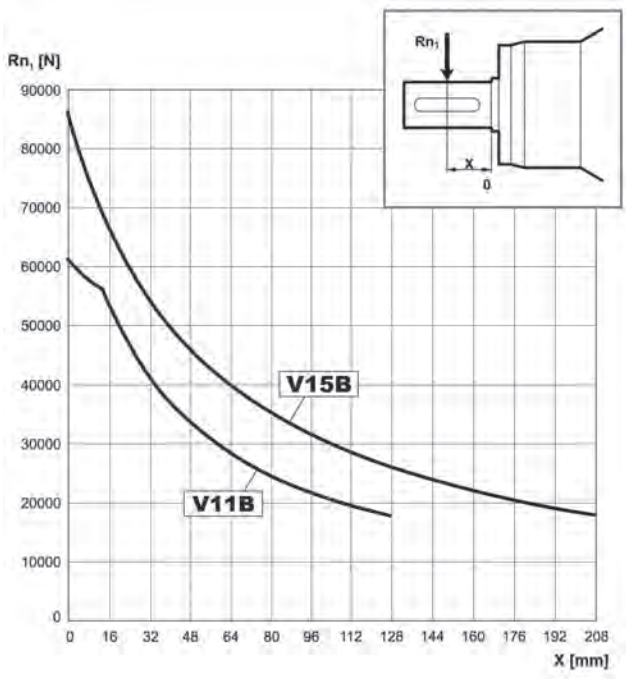

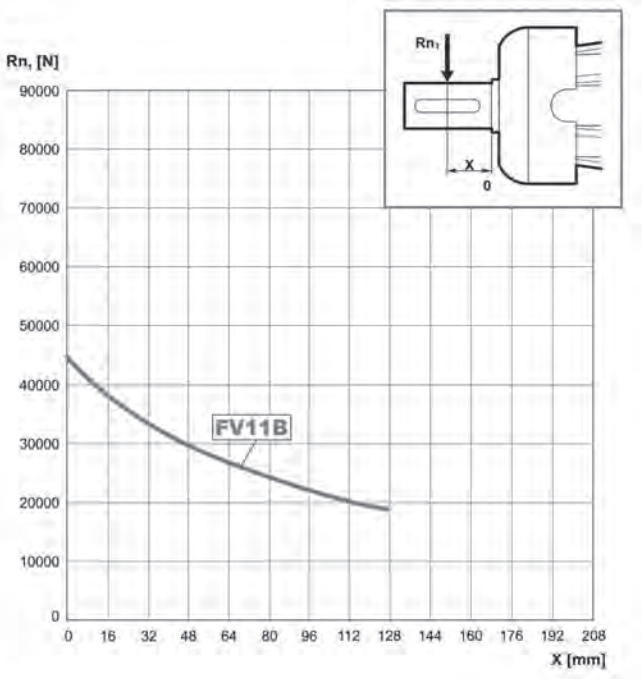

Load corrective factor fh_1 on shafts	$Fh_1 = n_1 \cdot h$	250000	500000	1000000	2000000	5000000	10000000
	fh_1	**1**	**0.79**	**0.63**	**0.50**	**0.37**	**0.29**

CUSTOMER'S SHAFT

FP

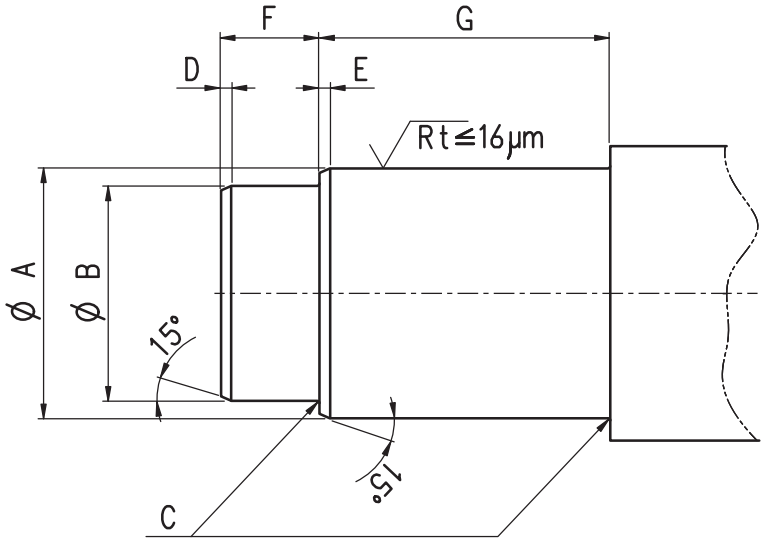

	A Ø H7 - h6 [mm]	B Ø H7 - h6 [mm]	C [mm]	D [mm]	E [mm]	F [mm]	G [mm]	Shaft material
300	42	35	1.6	2	2	18	38	Suggested material: Steel with tensile strength $\sigma_R \geq 700MPa$
301	52	35	1.6	2	2	18	38	
303 - 304 - 305	75	65	1.6	2	2	30	65	
306	90	75	1.6	3	3	55	85	
307	100	85	1.6	3	3	40	95	
309	120	—	1.6	—	3	—	140	
310	130	—	1.6	—	3	—	155	
311	135	—	1.6	—	3	—	150	
313	140	130	2	3	3	45	150	
314	180	160	1.6	3	3	50	200	
315	180	160	1.6	3	3	50	200	
316	180	165	1.6	3	3	90	180	
317	200	—	1.6	—	3	—	250	
318	220	200	2	3	3	130	180	
319	280	—	2	—	3	—	300	
321	320	—	2	—	3	—	300	
323	410	—	2	—	3	—	250	
325	450	—	2	—	3	—	300	

FDK

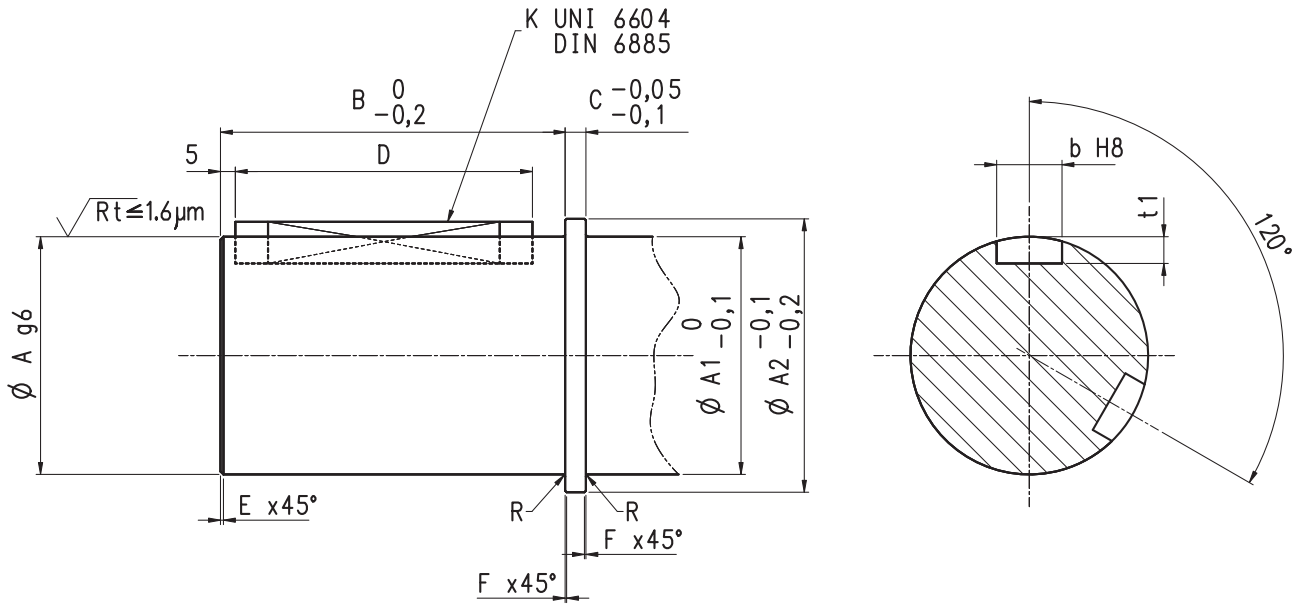

	A	B	A1	A2	C	Shaft material	Keyways dimensions		b	t_1	E	F	R
	Ø shaft	Length					Keyways UNI 6604 / DIN 6885				Chamfer dimensions		Fillets
	[mm]	[mm]	[mm]	[mm]	[mm]	Suggested material: Steel with tensile strength $\sigma_R \geq 900$MPa	—	[mm]	[mm]	[mm]	[mm]	[mm]	[mm]
300	35 g6	64	35	39	4		N°2 x 120°	10x8x50	10 H8	Dimension according to UNI6604 / DIN 6885 standard.	1 x 45°	0.5 x 45°	(*)
301	35 g6	64	35	43	5		N°2 x 120°	10x8x50	10 H8		1 x 45°	0.5 x 45°	0.5
303 - 304 - 305	65 g6	95	65	75	6		N°2 x 120°	18x11x80	18 H8		1 x 45°	0.5 x 45°	0.8
306	80 g6	116	80	92	7		N°2 x 120°	22x14x100	22 H8		1 x 45°	0.5 x 45°	0.8
307	90 g6	141	90	102	8		N°2 x 120°	25x14x125	25 H8		2 x 45°	1 x 45°	0.8
309	120 g6	128	120	136	10		N°2 x 120°	32x18x110	32 H8		2 x 45°	1 x 45°	1.6
310	130 g6	138	130	146	10		N°2 x 120°	32x18x120	32 H8		2 x 45°	1 x 45°	1.6

(*) Relief groove (UNI 4386 - 75 E0.6x0.3)

FZP

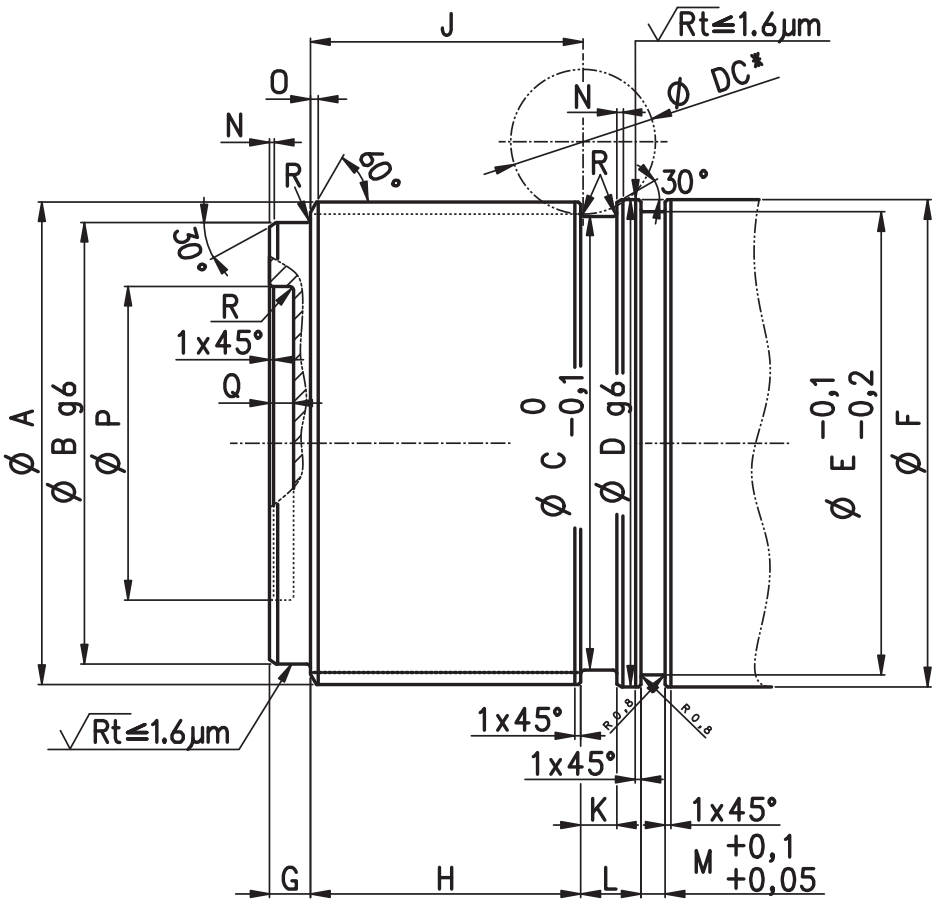

	A	B	C	Shaft material	D	E	F	G	H	K	J	L	M	N	O	P	Q	R	DC*
	Splined shaft DIN 5480	Ø H7 - g6	Relief groove diameter																
	[mm]	[mm]	[mm]		[mm]	[mm]	[mm]	[mm]	[mm]	[mm]	[mm]	[mm]	[mm]	[mm]	[mm]	[mm]	[mm]	[mm]	[mm]
311	120x3x38	108	112	Suggested material: Steel with tensile strength $\sigma_R \geq 900MPa$	124	112	124	19	69	9	70	18,5	6	1	1.6	—	—	1.6	60
313	140x5x26	110	132		142	132	142	26	83	18	84	30	6	1	2	—	—	3	60
314	150x5x28	136	136		152	136	152	16	103	8	104	20	8	1	2	—	—	1.6	60
315	150x5x28	136	136		152	136	152	16	103	8	104	20	8	1	2	—	—	1.6	60
316	170x5x32	150	154		172	154	172	30	113	20	114	45	9	1	3	—	—	3	60
317	200x5x38	187	192		202	192	202	16	112	7	113	21	9	1	3.5	130	10	1.6	60
318	210x5x40	190	194		212	194	212	27	133	20	134	45	9	2	3	—	—	3	60
319	260x5x50	248	243		265	243	265	29	144	20	145	40	11	2	3	—	—	3	60
321	300x8x36	282	281		305	281	305	25	158	25	159	50	12	2	3	—	—	3	70
323	400x8x48	360	381		405	381	405	35	254	26	256	53,5	12	2	4	—	—	5	70
325	450x8x55	410	431		455	431	455	34	272	24	274	66	12	2	4	—	—	5	70

* Max cutter diameter

TORQUE ARM

	L1 [mm]	L2 [mm]
300	300	450
301	580	
303	350	500
304		
305	370	
306	410	600
307	490	700
309	600	900
310	1030	1000
311	800	1100
313	900	1200
314	1100	1400
315		
316	1280	1500
317	1300	1600
318	1900	1800
319	1500	2000
321	1500	
323	1750	3000
325	2050	3200

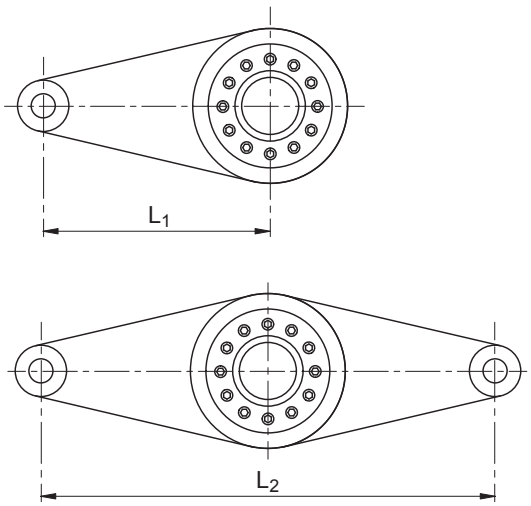

NOTE: Drawings for illustration purpose only

Suggested material: S275JR - UNI EN 10025 or S355JR - UNI EN 10025.

TORQUE ARM KIT FOR FP VERSIONS

If requested, it's possible to install a specific "Torque arm" Kit on 300 series geraboxes. For detailed information please contact our Technical Service .

	L1 [mm]	i [mm]
300	300	55
301	580	
303	350	80
304		
305	370	
306	410	115
307	490	
309	600	
310	1030	135
311	800	155
313	900	160
314	1100	200
315		
316	1280	210
317	1300	240
318	1900	280
319	1500	320
321	1500	360
323	1750	400
325	2050	440

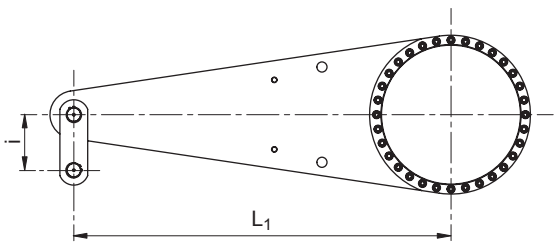

NOTE: Draw for illustration purpose only

Suggested material: S275JR - UNI EN 10025 or S355JR - UNI EN 10025.

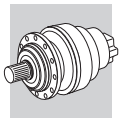

NEGATIVE MULTIDISC BRAKE AND HYDRAULIC MOTORS

H1 SYMBOLS AND UNITS OF MEASURE

Symbols	Units of Measure	Description
V	[cm^3]	Rot. displacement
p	[bar]	Pressure
pA. pB	[bar]	Pressure in A and B connections
Q	[l/min]	Flow rate
ηt		Efficiency
ηmh		Hydraulic-mechanical efficiency

Symbols	Units of Measure	Description
ηv		Volumetric efficiency
n	[min^{-1}]	Angular speed
M	[Nm]	Actual torque onto the motor shaft
cont		General value, for continuous duty
int		General value, intermittent duty

H2 NEGATIVE MULTIDISC BRAKE

DESCRIPTION

TRASMITAL's fail-safe parking brake is an oil immersed multidisc unit on the input side of the gearbox. The brake is operated when there is no hydraulic pressure and is released when the minimum release pressure is applied.
Use of parking brake is necessary whenever the driven system must be kept at standstill even under external forces and/or torques.

Applications:

- winches
- slewing drives
- parking brake on mobile equipment
- general industrial applications

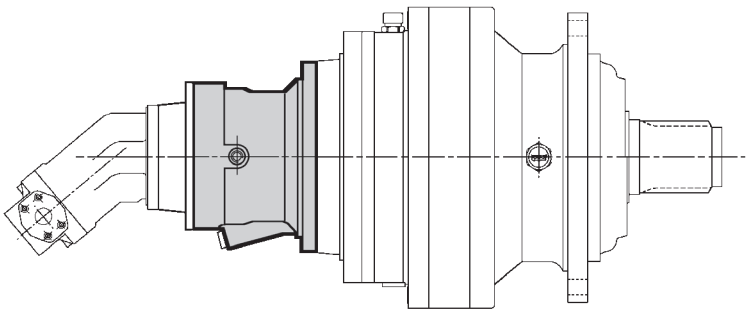

H2.1 Brake technical data

(A 22)

		Type																	
		4.							5.					6.					
		A	B	D	F	H	K	L	B	C	E	G	K	B	C	E	G	K	L
Static braking torque Mb	Nm ±10%	50	100	160	260	330	400	440	400	500	630	800	1000	850	1100	1500	2100	2600	3200
Min. opening pressure	bar	10	20	30	20	25	30	34	20	27	20	26	32	14	19	25	19	24	29
Max. operating pressure	bar	320																	
Oil volume for brake release	cm^3	6.65	6.65	6.65	6.65	6.65	6.65	6.65	13.96	13.96	13.96	13.96	13.96	37.2	37.2	37.2	37.2	37.2	37.2

H3 INPUTS FOR HYDRAULIC MOTORS

All sizes can be supplied with hydraulic motor input flanges.
The available motor adaptors are shown in the following pages.
The standard orientations (A) of the motor flanges are shown in the following scheme, taking into consideration the input side of the gearbox.

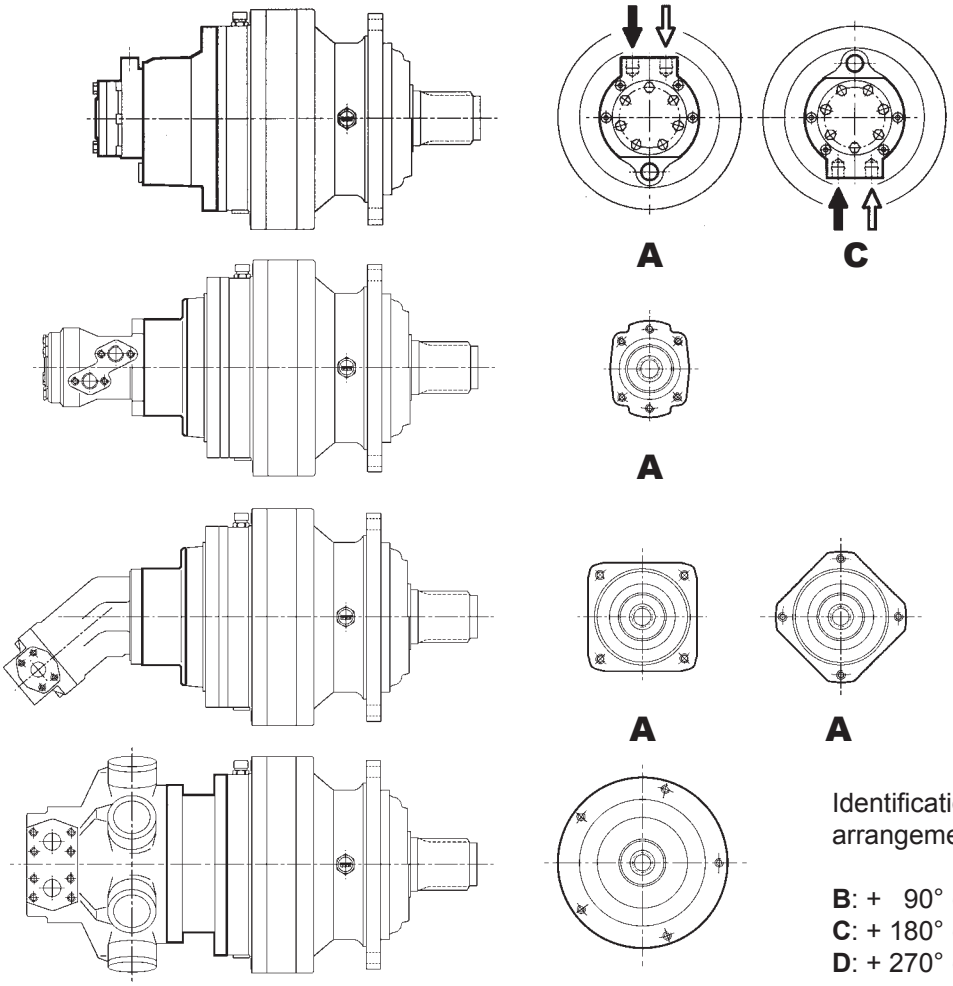

Identification codes of other arrangements:

B: + 90° (clockwise)
C: + 180° (clockwise)
D: + 270° (clockwise)

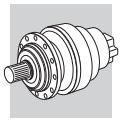

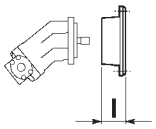

		SAE Standard J744c											
		SAE A 16/32 z9	SAE A ø15,875	SAE B 16/32 z13	SAE B ø22,2	SAE BB 16/32 z15	SAE BB ø25,4	SAE C 12/24 z14	SAE C ø31,7	SAE CC 12/24 z17	SAE C ø38,1	SAE D 8/16 z13	SAE E 8/16 z13
		S5AM	S5AN	S5BA	S5BB	S5BM	S5BN	S5CA	S5CB	S5CP	S5CQ	S5DA	S5EA
	CODE	I											
300	L1-L2-L3-L4	42	42	52	52	52	52	64	64	80	80	81	
	R2-R3-R4	42	42	52	52	52	52	64	64	80	80	81	
301	L1-L2-L3-L4	42	42	52	52	52	52	64	64	80	80	81	
	R2-R3-R4	42	42	52	52	52	52	64	64	80	80	81	
303	L1	42	42	52	52	52	52	64	64	80	80	81	
	L2-L3-L4	42	42	52	52	52	52	64	64	80	80	81	
	R2-R3-R4	42	42	52	52	52	52	64	64	80	80	81	
304	L1	42	42	52	52	52	52	64	64	80	80	81	
	L2-L3-L4	42	42	52	52	52	52	64	64	80	80	81	
	R2-R3-R4	42	42	52	52	52	52	64	64	80	80	81	
305	L1	42	42	52	52	52	52	64	64	80	80	81	
	L2-L3-L4	42	42	52	52	52	52	64	64	80	80	81	
	R2-R3-R4	42	42	52	52	52	52	64	64	80	80	81	
306	L1											101	113
	L2	42	42	52	52	52	52	64	64	80	80	81	
	L3-L4	42	42	52	52	52	52	64	64	80	80	81	
	R2-R3-R4	42	42	52	52	52	52	64	64	80	80	81	
307	L1											101	113
	L2	42	42	52	52	52	52	64	64	80	80	81	
	L3-L4	42	42	52	52	52	52	64	64	80	80	81	
	R2	42	42	52	52	52	52	64	64	80	80	81	
	R3-R4	42	42	52	52	52	52	64	64	80	80	81	
309	L1											101	113
	L2	42	42	52	52	52	52	64	64	80	80	81	
	L3-L4	42	42	52	52	52	52	64	64	80	80	81	
	R2	42	42	52	52	52	52	64	64	80	80	81	
	R3-R4	42	42	52	52	52	52	64	64	80	80	81	
310	L1											146	158
	L2											101	113
	L3	42	42	52	52	52	52	64	64	80	80	81	
	L4	42	42	52	52	52	52	64	64	80	80	81	
	R2(B)-R2(C)											101	113
	R3-R4	42	42	52	52	52	52	64	64	80	80	81	
311	L1												
	L2											101	113
	L3	42	42	52	52	52	52	64	64	80	80	81	
	L4	42	42	52	52	52	52	64	64	80	80	81	
	R2(B)-R2(C)											101	113
	R3-R4	42	42	52	52	52	52	64	64	80	80	81	
313	L1												
	L2											101	113
	L3	42	42	52	52	52	52	64	64	80	80	81	
	L4	42	42	52	52	52	52	64	64	80	80	81	
	R2(B)-R2(C)											101	113
	R3-R4	42	42	52	52	52	52	64	64	80	80	81	
314	L1												
	L2											146	113
	L3	42	42	52	52	52	52	64	64	80	80	81	
	L4	42	42	52	52	52	52	64	64	80	80	81	
	R3(B)-R3(C)											101	113
	R4	42	42	52	52	52	52	64	64	80	80	81	
315	L1												
	L2												
	L3											101	113
	L4	42	42	52	52	52	52	64	64	80	80	81	
	R3(B)-R3(C)											101	113
	R4	42	42	52	52	52	52	64	64	80	80	81	
316	L1												
	L2												
	L3											101	113
	L4	42	42	52	52	52	52	64	64	80	80	81	
	R3(B)-R3(C)											101	113
	R4	42	42	52	52	52	52	64	64	80	80	81	
317	L1												
	L2												
	L3											101	113
	L4	42	42	52	52	52	52	64	64	80	80	81	
	R3(B)-R3(C)											101	113
	R4	42	42	52	52	52	52	64	64	80	80	81	
318	L1												
	L2												
	L3												
	L4											101	113
	R4(B)-R4(C)											101	113
319	L1												
	L2												
	L3												
	L4											101	113
	R4(B)-R4(C)											101	113
321	L1												
	L2												
	L3												
	L4											101	113
	R4(B)-R4(C)											101	113

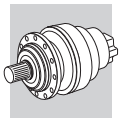

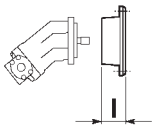

		CALZONI								CHAR-LYNN (EATON)								
		CALZONI MR190 N z8	CALZONI MR300 N z8	CALZONI MRP300 N z8	CALZONI MR450 N z8	CALZONI MR700 N z8	CALZONI MR1100 N z8	CALZONI MR1800 N z10	CALZONI MR2800 N z10	SERIE 2000 SAE A 1" 6B	SERIE 2000 SAE A ø25,4	SERIE 2000 SAE A ø32	SERIE 2000 SAE A 12/24 z14	SERIE 2000 BEARINGLESS 1 2/24 z12	SERIE 4000 SAE B ø31,75	SERIE 4000 SAE C 12/24 z17	SERIE 6000 SAE C ø38,1	SERIE 6000 SAE C 12/24 z17
	CODE	C0AA	C0AD	C0BL	C0AG	C0AL	C0AP	C0AS	C0AV	S5AQ	S5AS	D0AG	D0AH	E2AA	S5BP	S5CP	S5CQ	S5CP
										I								
300	L1-L2-L3-L4	64	78	78						42	42	64	64	52	68	80	80	80
	R2-R3-R4	64	78	78						42	42	64	64	52	68	80	80	80
301	L1-L2-L3-L4	64	78	78						42	42	64	64	52	68	80	80	80
	R2-R3-R4	64	78	78						42	42	64	64	52	68	80	80	80
303	L1	64	78	78						42	42	64	64	52	68	80	80	80
	L2-L3-L4	64	78	78						42	42	64	64	52	68	80	80	80
	R2-R3-R4	64	78	78						42	42	64	64	52	68	80	80	80
304	L1	64	78	78						42	42	64	64	52	68	80	80	80
	L2-L3-L4	64	78	78						42	42	64	64	52	68	80	80	80
	R2-R3-R4	64	78	78						42	42	64	64	52	68	80	80	80
305	L1	64	78	78						42	42	64	64	52	68	80	80	80
	L2-L3-L4	64	78	78						42	42	64	64	52	68	80	80	80
	R2-R3-R4	64	78	78						42	42	64	64	52	68	80	80	80
306	L1				98	102	133											
	L2	64	78	78						42	42	64	64	52	68	80	80	80
	L3-L4	64	78	78						42	42	64	64	52	68	80	80	80
	R2-R3-R4	64	78	78						42	42	64	64	52	68	80	80	80
307	L1				98	102	133											
	L2	64	78	78						42	42	64	64	52	68	80	80	80
	L3-L4	64	78	78						42	42	64	64	52	68	80	80	80
	R2	64	78	78						42	42	64	64	52	68	80	80	80
	R3-R4	64	78	78						42	42	64	64	52	68	80	80	80
309	L1				98	102	133											
	L2	64	78	78						42	42	64	64	52	68	80	80	80
	L3-L4	64	78	78						42	42	64	64	52	68	80	80	80
	R2	64	78	78						42	42	64	64	52	68	80	80	80
	R3-R4	64	78	78						42	42	64	64	52	68	80	80	80
310	L1				143	147	178											
	L2				98	102	133											
	L3	64	78	78						42	42	64	64	52	68	80	80	80
	L4	64	78	78						42	42	64	64	52	68	80	80	80
	R2(B)-R2(C)				98	102	133											
	R3-R4	64	78	78						42	42	64	64	52	68	80	80	80
311	L1					130	130	165	200									
	L2				98	102	133											
	L3	64	78	78						42	42	64	64	52	68	80	80	80
	L4	64	78	78						42	42	64	64	52	68	80	80	80
	R2(B)-R2(C)				98	102	133											
	R3-R4	64	78	78						42	42	64	64	52	68	80	80	80
313	L1					130	130	165	200									
	L2				98	102	133											
	L3	64	78	78						42	42	64	64	52	68	80	80	80
	L4	64	78	78						42	42	64	64	52	68	80	80	80
	R2(B)-R2(C)				98	102	133											
	R3-R4	64	78	78						42	42	64	64	52	68	80	80	80
314	L1																	
	L2				98	102	133											
	L3	64	78	78						42	42	64	64	52	68	80	80	80
	L4	64	78	78						42	42	64	64	52	68	80	80	80
	R3(B)-R3(C)				98	102	133											
	R4	64	78	78						42	42	64	64	52	68	80	80	80
315	L1																	
	L2					130	130	165	200									
	L3				98	102	133											
	L4	64	78	78						42	42	64	64	52	68	80	80	80
	R3(B)-R3(C)				98	102	133											
	R4	64	78	78						42	42	64	64	52	68	80	80	80
316	L1																	
	L2					130	130	165	200									
	L3				98	102	133											
	L4	64	78	78						42	42	64	64	52	68	80	80	80
	R3(B)-R3(C)				98	102	133											
	R4	64	78	78						42	42	64	64	52	68	80	80	80
317	L1																	
	L2					130	130	165	200									
	L3				98	102	133											
	L4	64	78	78						42	42	64	64	52	68	80	80	80
	R3(B)-R3(C)				98	102	133											
	R4	64	78	78						42	42	64	64	52	68	80	80	80
318	L1																	
	L2																	
	L3					130	130	165	200									
	L4				98	102	133											
	R4(B)-R4(C)				98	102	133											
319	L1																	
	L2																	
	L3					130	130	165	200									
	L4				98	102	133											
	R4(B)-R4(C)				98	102	133											
321	L1																	
	L2																	
	L3					130	130	165	200									
	L4				98	102	133											
	R4(B)-R4(C)				98	102	133											

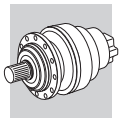

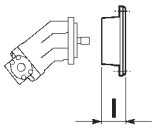

		SAUER DANFOSS (orbit)									DENISON Hydraulics							
		OMP-OMR 50/315 ø25	OMP-OMR 50/315 SAE 1" 6B	OMS 80/315 ø32	OMS 80/315 12/24 z14	OMSS 80/315 12/24 z12	OMT 160/400 ø40	OMT 160/400 12/24 z17	OMTS 160/400 12/24 z16	OMVS 315/800 10/20 z16	M6-M7-M8 *3** 12/24 z14	M11-M14 *3** 8/16 z13	M3 B 16/32 z9	M4C-M4SC 16/32 z13	M4D-M4SD 12/24 z14	M4DC-M4S DC 12/24 z14	M4E-M4SE 12/24 z14	M5BS 16/32 z13
	CODE	S5AP	S5AQ	D0AG	D0AH	D0AL	D0AM	D0AN	D0AQ	D0AU	S5CA	S5EA	S5AM	S5BA	S5CA	S5CA	S5CA	S5BA
										I								
300	L1-L2-L3-L4	42	42	64	64	37	112	112	57		64		42	52	64	64	64	52
	R2-R3-R4	42	42	64	64	37	112	112	57		64		42	52	64	64	64	52
301	L1-L2-L3-L4	42	42	64	64	37	112	112	57		64		42	52	64	64	64	52
	R2-R3-R4	42	42	64	64	37	112	112	57		64		42	52	64	64	64	52
303	L1	42	42	64	64	37	112	112	57		64		42	52	64	64	64	52
	L2-L3-L4	42	42	64	64	37	112	112	57		64		42	52	64	64	64	52
	R2-R3-R4	42	42	64	64	37	112	112	57		64		42	52	64	64	64	52
304	L1	42	42	64	64	37	112	112	57		64		42	52	64	64	64	52
	L2-L3-L4	42	42	64	64	37	112	112	57		64		42	52	64	64	64	52
	R2-R3-R4	42	42	64	64	37	112	112	57		64		42	52	64	64	64	52
305	L1	42	42	64	64	37	112	112	57		64		42	52	64	64	64	52
	L2-L3-L4	42	42	64	64	37	112	112	57		64		42	52	64	64	64	52
	R2-R3-R4	42	42	64	64	37	112	112	57		64		42	52	64	64	64	52
306	L1									70		113						
	L2	42	42	64	64	37	112	112	57		64		42	52	64	64	64	52
	L3-L4	42	42	64	64	37	112	112	57		64		42	52	64	64	64	52
	R2-R3-R4	42	42	64	64	37	112	112	57		64		42	52	64	64	64	52
307	L1									70		113						
	L2	42	42	64	64	37	112	112	57		64		42	52	64	64	64	52
	L3-L4	42	42	64	64	37	112	112	57		64		42	52	64	64	64	52
	R2	42	42	64	64	37	112	112	57		64		42	52	64	64	64	52
	R3-R4	42	42	64	64	37	112	112	57		64		42	52	64	64	64	52
309	L1									70		113						
	L2	42	42	64	64	37	112	112	57		64		42	52	64	64	64	52
	L3-L4	42	42	64	64	37	112	112	57		64		42	52	64	64	64	52
	R2	42	42	64	64	37	112	112	57		64		42	52	64	64	64	52
	R3-R4	42	42	64	64	37	112	112	57		64		42	52	64	64	64	52
310	L1									115		158						
	L2									70		113						
	L3	42	42	64	64	37	112	112	57		64		42	52	64	64	64	52
	L4	42	42	64	64	37	112	112	57		64		42	52	64	64	64	52
	R2(B)-R2(C)									70		113						
	R3-R4	42	42	64	64	37	112	112	57		64		42	52	64	64	64	52
311	L1																	
	L2									70		113						
	L3	42	42	64	64	37	112	112	57		64		42	52	64	64	64	52
	L4	42	42	64	64	37	112	112	57		64		42	52	64	64	64	52
	R2(B)-R2(C)									70		113						
	R3-R4	42	42	64	64	37	112	112	57		64		42	52	64	64	64	52
313	L1																	
	L2									70		113						
	L3	42	42	64	64	37	112	112	57		64		42	52	64	64	64	52
	L4	42	42	64	64	37	112	112	57		64		42	52	64	64	64	52
	R2(B)-R2(C)									70		113						
	R3-R4	42	42	64	64	37	112	112	57		64		42	52	64	64	64	52
314	L1																	
	L2									70		113						
	L3	42	42	64	64	37		112	57		64		42	52	64	64	64	52
	L4	42	42	64	64	37	112	112	57		64		42	52	64	64	64	52
	R3(B)-R3(C)									70		113						
	R4	42	42	64	64	37	112	112	57		64		42	52	64	64	64	52
315	L1																	
	L2																	
	L3									70		113						
	L4	42	42	64	64	37	112	112	57		64		42	52	64	64	64	52
	R3(B)-R3(C)									70		113						
	R4	42	42	64	64	37	112	112	57		64		42	52	64	64	64	52
316	L1																	
	L2																	
	L3									70		113						
	L4	42	42	64	64	37	112	112	57		64		42	52	64	64	64	52
	R3(B)-R3(C)									70		113						
	R4	42	42	64	64	37	112	112	57		64		42	52	64	64	64	52
317	L1																	
	L2																	
	L3									70		113						
	L4	42	42	64	64	37	112	112	57		64		42	52	64	64	64	52
	R3(B)-R3(C)									70		113						
	R4	42	42	64	64	37	112	112	57		64		42	52	64	64	64	52
318	L1																	
	L2																	
	L3																	
	L4									70		113						
	R4(B)-R4(C)									70		113						
319	L1																	
	L2																	
	L3																	
	L4									70		113						
	R4(B)-R4(C)									70		113						
321	L1																	
	L2																	
	L3																	
	L4									70		113						
	R4(B)-R4(C)									70		113						

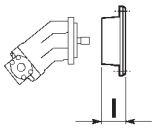

		LINDE							
		MMF 43 16/32 z15	MMF 63 12/24 z14	HMF 28-35-02 16/32 z15	HMF 50-02 16/32 z21	HMF-HMV 75-02 16/32 z21	HMF-HMV 105-02 16/32 z23	HMF-HMV 135-02 16/32 z27	BMF-BMV 186 50x2 Z24
		S5BM	S5CA	S5BM	S5CE	S5CE	S5CD	S5DC	I5AF
	CODE	I							
300	L1-L2-L3-L4	52	64	52	64	64	64	81	
	R2-R3-R4	52	64	52	64	64	64	81	
301	L1-L2-L3-L4	52	64	52	64	64	64	81	
	R2-R3-R4	52	64	52	64	64	64	81	
303	L1	52	64	52	64	64	64	81	
	L2-L3-L4	52	64	52	64	64	64	81	
	R2-R3-R4	52	64	52	64	64	64	81	
304	L1	52	64	52	64	64	64	81	
	L2-L3-L4	52	64	52	64	64	64	81	
	R2-R3-R4	52	64	52	64	64	64	81	
305	L1	52	64	52	64	64	64	81	
	L2-L3-L4	52	64	52	64	64	64	81	
	R2-R3-R4	52	64	52	64	64	64	81	
306	L1							101	121
	L2	52	64	52	64	64	64	81	
	L3-L4	52	64	52	64	64	64	81	
	R2-R3-R4	52	64	52	64	64	64	81	
307	L1							101	121
	L2	52	64	52	64	64	64	81	
	L3-L4	52	64	52	64	64	64	81	
	R2	52	64	52	64	64	64	81	
	R3-R4	52	64	52	64	64	64	81	
309	L1							101	121
	L2	52	64	52	64	64	64	81	
	L3-L4	52	64	52	64	64	64	81	
	R2	52	64	52	64	64	64	81	
	R3-R4	52	64	52	64	64	64	81	
310	L1							146	166
	L2							101	121
	L3	52	64	52	64	64	64	81	
	L4	52	64	52	64	64	64	81	
	R2(B)-R2(C)							101	121
	R3-R4	52	64	52	64	64	64	81	
311	L1								
	L2							101	121
	L3	52	64	52	64	64	64	81	
	L4	52	64	52	64	64	64	81	
	R2(B)-R2(C)							101	121
	R3-R4	52	64	52	64	64	64	81	
313	L1								
	L2							101	121
	L3	52	64	52	64	64	64	81	
	L4	52	64	52	64	64	64	81	
	R2(B)-R2(C)							101	121
	R3-R4	52	64	52	64	64	64	81	
314	L1								
	L2							101	121
	L3	52	64	52	64	64	64	81	
	L4	52	64	52	64	64	64	81	
	R3(B)-R3(C)							101	121
	R4	52	64	52	64	64	64	81	
315	L1								
	L2								
	L3							101	121
	L4	52	64	52	64	64	64	81	
	R3(B)-R3(C)							101	121
	R4	52	64	52	64	64	64	81	
316	L1								
	L2								
	L3							101	121
	L4	52	64	52	64	64	64	81	
	R3(B)-R3(C)							101	121
	R4	52	64	52	64	64	64	81	
317	L1								
	L2								
	L3							101	121
	L4	52	64	52	64	64	64	81	
	R3(B)-R3(C)							101	121
	R4	52	64	52	64	64	64	81	
318	L1								
	L2								
	L3								
	L4							101	121
	R4(B)-R4(C)							101	121
319	L1								
	L2								
	L3								
	L4							101	121
	R4(B)-R4(C)							101	121
321	L1								
	L2								
	L3								
	L4							101	121
	R4(B)-R4(C)							101	121

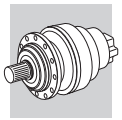

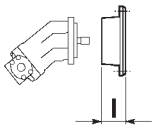

		BRUENINGHAUS HYDROMATIK (BOSCH REXROTH)															
		A2FM10-12-16 25x1.25 z18	A2FM23-28-32 A6VM 28 30x2 z14	A2FM23-28 ø25	A2FM45 32x2 z14	A2FM45-56 30x2 z14	A2FM56-63 A6VM55 35x2 z16	A2FM80-90 A6VM80 40x2 z18	A2FM80 35x2 z16	A2FM107-125 A6VM107 45x2 z21	A2FM107 A6VM107 40x2 z18	A2FM160-180 A6VM160 50x2 z24	A2FM160 A6VM160 45x2 z21	A2FM200 A6VM200 50x2 z24	A6VM250 50x2 z24	A2FM250 50x2 z24	A10FM45.30W A10VM63 16/32 z15
	CODE	H0AA	H0AE	H0AH	H0AI	H0BA	H0BC	H0BG	H0BI	H0CA	H0CC	H0CE	H0CG	H0CI	H0DA	H0DE	S5BM
		I															
300	L1-L2-L3-L4	42	52	52	64	64	64	75	75	101	101		101				52
	R2-R3-R4	42	52	52	64	64	64	75	75	101	101		101				52
301	L1-L2-L3-L4	42	52	52	64	64	64	75	75	101	101		101				52
	R2-R3-R4	42	52	52	64	64	64	75	75	101	101		101				52
303	L1	42	52	52	64	64	64	75	75	101	101		101				52
	L2-L3-L4	42	52	52	64	64	64	75	75	101	101		101				52
	R2-R3-R4	42	52	52	64	64	64	75	75	101	101		101				52
304	L1	42	52	52	64	64	64	75	75	101	101		101				52
	L2-L3-L4	42	52	52	64	64	64	75	75	101	101		101				52
	R2-R3-R4	42	52	52	64	64	64	75	75	101	101		101				52
305	L1	42	52	52	64	64	64	75	75	101	101		101				52
	L2-L3-L4	42	52	52	64	64	64	75	75	101	101		101				52
	R2-R3-R4	42	52	52	64	64	64	75	75	101	101		101				52
306	L1											101	101	101	113	113	
	L2	42	52	52	64	64	64	75	75	101	101		101				52
	L3-L4	42	52	52	64	64	64	75	75	101	101		101				52
	R2-R3-R4	42	52	52	64	64	64	75	75	101	101		101				52
307	L1											101	101	101	113	113	
	L2	42	52	52	64	64	64	75	75	101	101		101				52
	L3-L4	42	52	52	64	64	64	75	75	101	101		101				52
	R2	42	52	52	64	64	64	75	75	101	101		101				52
	R3-R4	42	52	52	64	64	64	75	75	101	101		101				52
309	L1											101	101	101	113	113	
	L2	42	52	52	64	64	64	75	75	101	101		101				52
	L3-L4	42	52	52	64	64	64	75	75	101	101		101				52
	R2	42	52	52	64	64	64	75	75	101	101		101				52
	R3-R4	42	52	52	64	64	64	75	75	101	101		101				52
310	L1											146	146	146	158	158	
	L2											101	101	101	113	113	
	L3	42	52	52	64	64	64	75	75	101	101		101				52
	L4	42	52	52	64	64	64	75	75	101	101		101				52
	R2(B)-R2(C)											101	101	101	113	113	
	R3-R4	42	52	52	64	64	64	75	75	101	101		101				52
311	L1																
	L2											101	101	101	113	113	
	L3	42	52	52	64	64	64	75	75	101	101		101				52
	L4	42	52	52	64	64	64	75	75	101	101		101				52
	R2(B)-R2(C)											101	101	101	113	113	
	R3-R4	42	52	52	64	64	64	75	75	101	101		101				52
313	L1																
	L2											101	101	101	113	113	
	L3	42	52	52	64	64	64	75	75	101	101		101				52
	L4	42	52	52	64	64	64	75	75	101	101		101				52
	R2(B)-R2(C)											101	101	101	113	113	
	R3-R4	42	52	52	64	64	64	75	75	101	101		101				52
314	L1																
	L2											101	101	101	113	113	
	L3	42	52	52	64	64	64	75	75	101	101		101		113		52
	L4	42	52	52	64	64	64	75	75	101	101		101				52
	R3(B)-R3(C)											101	101	101	113	113	
	R4	42	52	52	64	64	64	75	75	101	101		101				52
315	L1																
	L2																
	L3											101	101	101	113	113	
	L4	42	52	52	64	64	64	75	75	101	101		101				52
	R3(B)-R3(C)											101	101	101	113	113	
	R4	42	52	52	64	64	64	75	75	101	101		101				52
316	L1																
	L2																
	L3											101	101	101	113	113	
	L4	42	52	52	64	64	64	75	75	101	101		101				52
	R3(B)-R3(C)											101	101	101	113	113	
	R4	42	52	52	64	64	64	75	75	101	101		101				52
317	L1																
	L2																
	L3											101	101	101	113	113	
	L4	42	52	52	64	64	64	75	75	101	101		101				52
	R3(B)-R3(C)											101	101	101	113	113	
	R4	42	52	52	64	64	64	75	75	101	101		101				52
318	L1																
	L2																
	L3																
	L4											101	101	101	113	113	
	R4(B)-R4(C)											101	101	101	113	113	
319	L1																
	L2																
	L3																
	L4											101	101	101	113	113	
	R4(B)-R4(C)											101	101	101	113	113	
321	L1																
	L2																
	L3																
	L4											101	101	101	113	113	
	R4(B)-R4(C)											101	101	101	113	113	

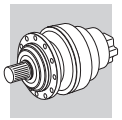

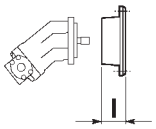

		SAI							KAWASAKI STAFFA		
		GM05 UNI 8953	GM1 UNI 8953	GM1/P1/S1 35x2 z16	GM2 UNI 8953	GM3 UNI 8953	GM4/GM5 UNI 8953	SAI L7 (9) N80x3 z25	B030 z17	B045 z17	HM (HD)B150 HM (HD)B200 5/10 z16
		S2BA	S2AB	S2CE	S2AF	S2DN	S2BF	S2BH	S1AB	S1AC	S1AL
	CODE	I									
300	L1-L2-L3-L4	73	37	57							
	R2-R3-R4	73	37	57							
301	L1-L2-L3-L4	73	37	57							
	R2-R3-R4	73	37	57							
303	L1	73	37	57							
	L2-L3-L4	73	37	57							
	R2-R3-R4	73	37	57							
304	L1	73	37	57							
	L2-L3-L4	73	37	57							
	R2-R3-R4	73	37	57							
305	L1	73	37	57							
	L2-L3-L4	73	37	57							
	R2-R3-R4	73	37	57							
306	L1		74		98	98	105		135	140	
	L2	73	37	57							
	L3-L4	73	37	57							
	R2-R3-R4	73	37	57							
307	L1		74		98	98	105		135	140	
	L2	73	37	57							
	L3-L4	73	37	57							
	R2	73	37	57							
	R3-R4	73	37	57							
309	L1		74		98	98	105		135	140	
	L2	73	37	57							
	L3-L4	73	37	57							
	R2	73	37	57							
	R3-R4	73	37	57							
310	L1		119		143	143	150		180	185	
	L2		74		98	98	105		135	140	
	L3	73	37	57							
	L4	73	37	57							
	R2(B)-R2(C)		74		98	98	105		135	140	
	R3-R4	73	37	57							
311	L1				135		150	90			187
	L2		74		98	98	105		135	140	
	L3	73	37	57							
	L4	73	37	57							
	R2(B)-R2(C)		74		98	98	105		135	140	
	R3-R4	73	37	57							
313	L1				135		150	90			187
	L2		74		98	98	105		135	140	
	L3	73	37	57							
	L4	73	37	57							
	R2(B)-R2(C)		74		98	98	105		135	140	
	R3-R4	73	37	57							
314	L1										
	L2		74		98	98	105		135	140	
	L3	73	37	57							
	L4	73	37	57							
	R3(B)-R3(C)		74		98	98	105		135	140	
	R4	73	37	57							
315	L1										
	L2				135		150	90			187
	L3		74		98	98	105		135	140	
	L4	73	37	57							
	R3(B)-R3(C)		74		98	98	105		135	140	
	R4	73	37	57							
316	L1										
	L2				135		150	90			187
	L3		74		98	98	105		135	140	
	L4	73	37	57							
	R3(B)-R3(C)		74		98	98	105		135	140	
	R4	73	37	57							
317	L1										
	L2				135		150	90			187
	L3		74		98	98	105		135	140	
	L4	73	37	57							
	R3(B)-R3(C)		74		98	98	105		135	140	
	R4	73	37	57							
318	L1										
	L2										
	L3				135		150	90			187
	L4		74		98	98	105		135	140	
	R4(B)-R4(C)		74		98	98	105		135	140	
319	L1										
	L2										
	L3				135		150	90			187
	L4		74		98	98	105		135	140	
	R4(B)-R4(C)		74		98	98	105		135	140	
321	L1										
	L2										
	L3				135		150	90			187
	L4		74		98	98	105		135	140	
	R4(B)-R4(C)		74		98	98	105		135	140	

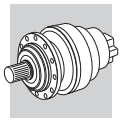

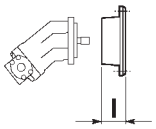

		SAUER DANFOSS (piston)														
		OMF-SMF-OMV -SMV 1-038 16/32 z13	SMF 2/033-052-070 16/32 z21	SMF 2/089 16/32 z23	SMF 2/119 16/32 z27	SMF 2/166-227 16/32 z27	SMF 4/023 90M042 16/32 z13	SMF 4/046 90M042 16/32 z15	90 M055 16/32 z21	90 M075-M100 16/32 z23	90 M130 16/32 z27	51 V 060 12/24 z14	51 V 080 12/24 z14	51 V 110 8/16 z13	51 V 160 8/16 z13	51 V 250 8/16 z15
	CODE	S5BA	S5CE	S5CD	S5DC	S5EC	S5BA	S5BM	S5CE	S5CD	S5DC	S5CA	S5CA	S5DA	S5DA	S5ED
									I							
300	L1-L2-L3-L4	52	64	64	81		52	52	64	64	81	64	64	81	81	
	R2-R3-R4	52	64	64	81		52	52	64	64	81	64	64	81	81	
301	L1-L2-L3-L4	52	64	64	81		52	52	64	64	81	64	64	81	81	
	R2-R3-R4	52	64	64	81		52	52	64	64	81	64	64	81	81	
303	L1	52	64	64	81		52	52	64	64	81	64	64	81	81	
	L2-L3-L4	52	64	64	81		52	52	64	64	81	64	64	81	81	
	R2-R3-R4	52	64	64	81		52	52	64	64	81	64	64	81	81	
304	L1	52	64	64	81		52	52	64	64	81	64	64	81	81	
	L2-L3-L4	52	64	64	81		52	52	64	64	81	64	64	81	81	
	R2-R3-R4	52	64	64	81		52	52	64	64	81	64	64	81	81	
305	L1	52	64	64	81		52	52	64	64	81	64	64	81	81	
	L2-L3-L4	52	64	64	81		52	52	64	64	81	64	64	81	81	
	R2-R3-R4	52	64	64	81		52	52	64	64	81	64	64	81	81	
306	L1				101	113					101			101	101	113
	L2	52	64	64	81		52	52	64	64	81	64	64	81	81	
	L3-L4	52	64	64	81		52	52	64	64	81	64	64	81	81	
	R2-R3-R4	52	64	64	81		52	52	64	64	81	64	64	81	81	
307	L1				101	113					101			101	101	113
	L2	52	64	64	81		52	52	64	64	81	64	64	81	81	
	L3-L4	52	64	64	81		52	52	64	64	81	64	64	81	81	
	R2	52	64	64	81		52	52	64	64	81	64	64	81	81	
	R3-R4	52	64	64	81		52	52	64	64	81	64	64	81	81	
309	L1				101	113					101			101	101	113
	L2	52	64	64	81		52	52	64	64	81	64	64	81	81	
	L3-L4	52	64	64	81		52	52	64	64	81	64	64	81	81	
	R2	52	64	64	81		52	52	64	64	81	64	64	81	81	
	R3-R4	52	64	64	81		52	52	64	64	81	64	64	81	81	
310	L1				146	158					146			146	146	158
	L2				101	113					101			101	101	113
	L3	52	64	64	81		52	52	64	64	81	64	64	81	81	
	L4	52	64	64	81		52	52	64	64	81	64	64	81	81	
	R2(B)-R2(C)				101	113					101			101	101	113
	R3-R4	52	64	64	81		52	52	64	64	81	64	64	81	81	
311	L1															
	L2				101	113					101			101	101	113
	L3	52	64	64	81		52	52	64	64	81	64	64	81	81	
	L4	52	64	64	81		52	52	64	64	81	64	64	81	81	
	R2(B)-R2(C)				101	113					101			101	101	113
	R3-R4	52	64	64	81		52	52	64	64	81	64	64	81	81	
313	L1															
	L2				101	113					101			101	101	113
	L3	52	64	64	81		52	52	64	64	81	64	64	81	81	
	L4	52	64	64	81		52	52	64	64	81	64	64	81	81	
	R2(B)-R2(C)				101	113					101			101	101	113
	R3-R4	52	64	64	81		52	52	64	64	81	64	64	81	81	
314	L1															
	L2				101	113					101			101	101	113
	L3	52	64	64	81		52	52	64	64	81	64	64	81	81	
	L4	52	64	64	81		52	52	64	64	81	64	64	81	81	
	R3(B)-R3(C)				101	113					101			101	101	113
	R4	52	64	64	81		52	52	64	64	81	64	64	81	81	
315	L1															
	L2															
	L3				101	113					101			101	101	113
	L4	52	64	64	81		52	52	64	64	81	64	64	81	81	
	R3(B)-R3(C)				101	113					101			101	101	113
	R4	52	64	64	81		52	52	64	64	81	64	64	81	81	
316	L1															
	L2															
	L3				101	113					101			101	101	113
	L4	52	64	64	81		52	52	64	64	81	64	64	81	81	
	R3(B)-R3(C)				101	113					101			101	101	113
	R4	52	64	64	81		52	52	64	64	81	64	64	81	81	
317	L1															
	L2															
	L3				101	113					101			101	101	113
	L4	52	64	64	81		52	52	64	64	81	64	64	81	81	
	R3(B)-R3(C)				101	113					101			101	101	113
	R4	52	64	64	81		52	52	64	64	81	64	64	81	81	
318	L1															
	L2															
	L3															
	L4				101	113					101			101	101	113
	R4(B)-R4(C)				101	113					101			101	101	113
319	L1															
	L2															
	L3															
	L4				101	113					101			101	101	113
	R4(B)-R4(C)				101	113					101			101	101	113
321	L1															
	L2															
	L3															
	L4				101	113					101			101	101	113
	R4(B)-R4(C)				101	113					101			101	101	113

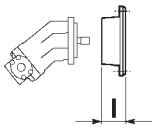

		TRW-TORQMOTOR (PARKER)					VICKERS (EATON)				WHITE				
		MAG 04-32 SAE 1" 6B	MAF 06-40 SAE 1" 6B	MAB 06-32 SAE 1" 6B	MAB 06-32 SAE A ø25	MAE 10-68 SAE 1" 6B	MFE 19 16/32 z15	25M**A11 16/32 z13	35-45 M**A11 12/24 z14	50 M**A11 8/16 z13	HS 02-15 SAE A ø25	HS 02-15 SAE A 1" 6B	RS 08-24 SAE A ø25	RS 08-24 SAE A1" 6B	REO 06-45 SAE A1" 6B
		S5AQ	S5AQ	S5AQ	S5AP	S5AQ	S5BM	S5BA	S5CA	S5DA	S5AP	S5AQ	S5AP	S5AQ	S5AP
	CODE	I													
300	L1-L2-L3-L4	42	42	42	42	42	52	52	64	81	42	42	42	42	42
	R2-R3-R4	42	42	42	42	42	52	52	64	81	42	42	42	42	42
301	L1-L2-L3-L4	42	42	42	42	42	52	52	64	81	42	42	42	42	42
	R2-R3-R4	42	42	42	42	42	52	52	64	81	42	42	42	42	42
303	L1	42	42	42	42	42	52	52	64	81	42	42	42	42	42
	L2-L3-L4	42	42	42	42	42	52	52	64	81	42	42	42	42	42
	R2-R3-R4	42	42	42	42	42	52	52	64	81	42	42	42	42	42
304	L1	42	42	42	42	42	52	52	64	81	42	42	42	42	42
	L2-L3-L4	42	42	42	42	42	52	52	64	81	42	42	42	42	42
	R2-R3-R4	42	42	42	42	42	52	52	64	81	42	42	42	42	42
305	L1	42	42	42	42	42	52	52	64	81	42	42	42	42	42
	L2-L3-L4	42	42	42	42	42	52	52	64	81	42	42	42	42	42
	R2-R3-R4	42	42	42	42	42	52	52	64	81	42	42	42	42	42
306	L1									101					
	L2	42	42	42	42	42	52	52	64	81	42	42	42	42	42
	L3-L4	42	42	42	42	42	52	52	64	81	42	42	42	42	42
	R2-R3-R4	42	42	42	42	42	52	52	64	81	42	42	42	42	42
307	L1									101					
	L2	42	42	42	42	42	52	52	64	81	42	42	42	42	42
	L3-L4	42	42	42	42	42	52	52	64	81	42	42	42	42	42
	R2	42	42	42	42	42	52	52	64	81	42	42	42	42	42
	R3-R4	42	42	42	42	42	52	52	64	81	42	42	42	42	42
309	L1									101					
	L2	42	42	42	42	42	52	52	64	81	42	42	42	42	42
	L3-L4	42	42	42	42	42	52	52	64	81	42	42	42	42	42
	R2	42	42	42	42	42	52	52	64	81	42	42	42	42	42
	R3-R4	42	42	42	42	42	52	52	64	81	42	42	42	42	42
310	L1									146					
	L2									101					
	L3	42	42	42	42	42	52	52	64	81	42	42	42	42	42
	L4	42	42	42	42	42	52	52	64	81	42	42	42	42	42
	R2(B)-R2(C)									101					
	R3-R4	42	42	42	42	42	52	52	64	81	42	42	42	42	42
311	L1														
	L2									101					
	L3	42	42	42	42	42	52	52	64	81	42	42	42	42	42
	L4	42	42	42	42	42	52	52	64	81	42	42	42	42	42
	R2(B)-R2(C)									101					
	R3-R4	42	42	42	42	42	52	52	64	81	42	42	42	42	42
313	L1														
	L2									101					
	L3	42	42	42	42	42	52	52	64	81	42	42	42	42	42
	L4	42	42	42	42	42	52	52	64	81	42	42	42	42	42
	R2(B)-R2(C)									101					
	R3-R4	42	42	42	42	42	52	52	64	81	42	42	42	42	42
314	L1														
	L2									101					
	L3	42	42	42	42	42	52	52	64	81	42	42	42	42	42
	L4	42	42	42	42	42	52	52	64	81	42	42	42	42	42
	R3(B)-R3(C)									101					
	R4	42	42	42	42	42	52	52	64	81	42	42	42	42	42
315	L1														
	L2														
	L3									101					
	L4	42	42	42	42	42	52	52	64	81	42	42	42	42	42
	R3(B)-R3(C)									101					
	R4	42	42	42	42	42	52	52	64	81	42	42	42	42	42
316	L1														
	L2														
	L3									101					
	L4	42	42	42	42	42	52	52	64	81	42	42	42	42	42
	R3(B)-R3(C)									101					
	R4	42	42	42	42	42	52	52	64	81	42	42	42	42	42
317	L1														
	L2														
	L3									101					
	L4	42	42	42	42	42	52	52	64	81	42	42	42	42	42
	R3(B)-R3(C)									101					
	R4	42	42	42	42	42	52	52	64	81	42	42	42	42	42
318	L1														
	L2														
	L3														
	L4									101					
	R4(B)-R4(C)									101					
319	L1														
	L2														
	L3														
	L4									101					
	R4(B)-R4(C)									101					
321	L1														
	L2														
	L3														
	L4									101					
	R4(B)-R4(C)									101					

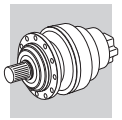

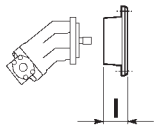

		VOAC (PARKER)																		
		F11-5 CK ø18	F11-10 CK ø20	F11-19 CK ø25	F11-19 CD 25x1,25 z18	F12-30 MF*I*D 30x2 z14	F12-40 MF*I*D 32x2 z14	F12-60 MF*I*D 35x2 z16	F12-80 MF*I*D 40x2 z18	F12-110 MF*I*D 45x2 z21	F11-150/250 S+S 8/16 z13	V12 060 I*D 35x2 z16	V12 060 S*S 12/24 z14	V12 080 N*D 40x2 z18	V12 080 S*S 12/24 z14	V12 110 I*D 45x2 z21	V12 110 S*S 8/16 z13	V12 160 S*S 8/16 z13	V12 160 N*C 45x2 z21
	CODE	V0AA	V0AC	V0AE	V0AG	H0AE	H0AI	H0BC	H0BG	H0CA	S5DA	H0BC	S5CA	H0BG	S5CA	H0CA	S5DA	S5DA	H0CG
		I																		
300	L1-L2-L3-L4	64	52	53	53	52	64	64	75	101	81	64	64	75	64	101	81	81	101
	R2-R3-R4	64	52	53	53	52	64	64	75	101	81	64	64	75	64	101	81	81	101
301	L1-L2-L3-L4	64	52	53	53	52	64	64	75	101	81	64	64	75	64	101	81	81	101
	R2-R3-R4	64	52	53	53	52	64	64	75	101	81	64	64	75	64	101	81	81	101
303	L1	64	52	53	53	52	64	64	75	101	81	64	64	75	64	101	81	81	101
	L2-L3-L4	64	52	53	53	52	64	64	75	101	81	64	64	75	64	101	81	81	101
	R2-R3-R4	64	52	53	53	52	64	64	75	101	81	64	64	75	64	101	81	81	101
304	L1	64	52	53	53	52	64	64	75	101	81	64	64	75	64	101	81	81	101
	L2-L3-L4	64	52	53	53	52	64	64	75	101	81	64	64	75	64	101	81	81	101
	R2-R3-R4	64	52	53	53	52	64	64	75	101	81	64	64	75	64	101	81	81	101
305	L1	64	52	53	53	52	64	64	75	101	81	64	64	75	64	101	81	81	101
	L2-L3-L4	64	52	53	53	52	64	64	75	101	81	64	64	75	64	101	81	81	101
	R2-R3-R4	64	52	53	53	52	64	64	75	101	81	64	64	75	64	101	81	81	101
306	L1										101						101	101	
	L2	64	52	53	53	52	64	64	75	101	81	64	64	75	64	101	81	81	101
	L3-L4	64	52	53	53	52	64	64	75	101	81	64	64	75	64	101	81	81	101
	R2-R3-R4	64	52	53	53	52	64	64	75	101	81	64	64	75	64	101	81	81	101
307	L1										101						101	101	
	L2	64	52	53	53	52	64	64	75	101	81	64	64	75	64	101	81	81	101
	L3-L4	64	52	53	53	52	64	64	75	101	81	64	64	75	64	101	81	81	101
	R2	64	52	53	53	52	64	64	75	101	81	64	64	75	64	101	81	81	101
	R3-R4	64	52	53	53	52	64	64	75	101	81	64	64	75	64	101	81	81	101
309	L1										101						101	101	
	L2	64	52	53	53	52	64	64	75	101	81	64	64	75	64	101	81	81	101
	L3-L4	64	52	53	53	52	64	64	75	101	81	64	64	75	64	101	81	81	101
	R2	64	52	53	53	52	64	64	75	101	81	64	64	75	64	101	81	81	101
	R3-R4	64	52	53	53	52	64	64	75	101	81	64	64	75	64	101	81	81	101
310	L1										146						146	146	
	L2										101						101	101	
	L3	64	52	53	53	52	64	64	75	101	81	64	64	75	64	101	81	81	101
	L4	64	52	53	53	52	64	64	75	101	81	64	64	75	64	101	81	81	101
	R2(B)-R2(C)										101						101	101	
	R3-R4	64	52	53	53	52	64	64	75	101	81	64	64	75	64	101	81	81	101
311	L1																		
	L2										101						101	101	
	L3	64	52	53	53	52	64	64	75	101	81	64	64	75	64	101	81	81	101
	L4	64	52	53	53	52	64	64	75	101	81	64	64	75	64	101	81	81	101
	R2(B)-R2(C)										101						101	101	
	R3-R4	64	52	53	53	52	64	64	75	101	81	64	64	75	64	101	81	81	101
313	L1																		
	L2										101						101	101	
	L3	64	52	53	53	52	64	64	75	101	81	64	64	75	64	101	81	81	101
	L4	64	52	53	53	52	64	64	75	101	81	64	64	75	64	101	81	81	101
	R2(B)-R2(C)										101						101	101	
	R3-R4	64	52	53	53	52	64	64	75	101	81	64	64	75	64	101	81	81	101
314	L1																		
	L2										101						101	101	
	L3	64	52	53	53	52	64	64	75	101	81	64	64	75	64	101	81	81	101
	L4	64	52	53	53	52	64	64	75	101	81	64	64	75	64	101	81	81	101
	R3(B)-R3(C)										101						101	101	
	R4	64	52	53	53	52	64	64	75	101	81	64	64	75	64	101	81	81	101
315	L1																		
	L2																		
	L3										101						101	101	
	L4	64	52	53	53	52	64	64	75	101	81	64	64	75	64	101	81	81	101
	R3(B)-R3(C)										101						101	101	
	R4	64	52	53	53	52	64	64	75	101	81	64	64	75	64	101	81	81	101
316	L1																		
	L2																		
	L3										101						101	101	
	L4	64	52	53	53	52	64	64	75	101	81	64	64	75	64	101	81	81	101
	R3(B)-R3(C)										101						101	101	
	R4	64	52	53	53	52	64	64	75	101	81	64	64	75	64	101	81	81	101
317	L1																		
	L2																		
	L3										101						101	101	
	L4	64	52	53	53	52	64	64	75	101	81	64	64	75	64	101	81	81	101
	R3(B)-R3(C)										101						101	101	
	R4	64	52	53	53	52	64	64	75	101	81	64	64	75	64	101	81	81	101
318	L1																		
	L2																		
	L3																		
	L4										101						101	101	
	R4(B)-R4(C)										101						101	101	
319	L1																		
	L2																		
	L3																		
	L4										101						101	101	
	R4(B)-R4(C)										101						101	101	
321	L1																		
	L2																		
	L3																		
	L4										101						101	101	
	R4(B)-R4(C)										101						101	101	

H4 HYDRAULIC MOTORS

GENERAL FEATURES

Gearboxes belonging to the series 300 can be supplied complete with MG hydraulic motors manufactured by BONFIGLIOLI TRASMITAL. These motors were designed to provide compact and energy efficient gearmotors.
Before ordering, you should consult with the Technical Service Bonfiglioli.

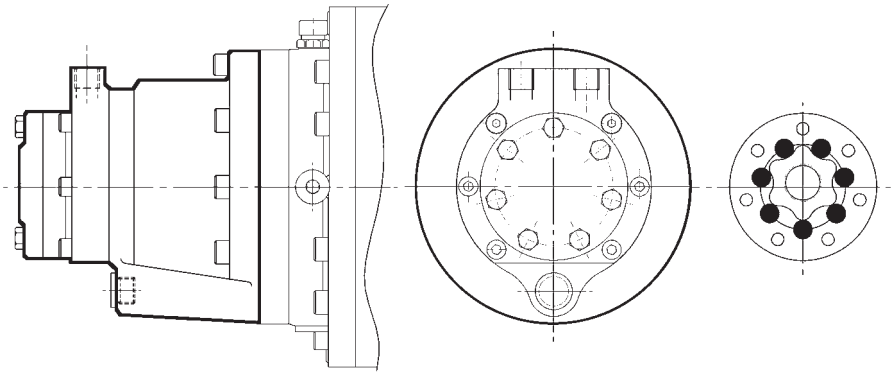

H4.1 MG hydraulic motors

Design characteristics:

- Orbit system with GEROLER® rollers between rotor and stator
- Distributor on output shaft
- Displacements from 50 to 250 cm^3
- Max. pressure 175 bar
- Max. flow rate 48 lt/min
- High efficiency
- Hydraulic brake can be included in the motor overall dimensions
- Inner brake directly controlled by the motor with no valves or outer circuits required.

H5 TECHNICAL FEATURES

H5.1 Displacement V [cm^3]

Geometrical volume produced as a result of each motor rotation corresponding to the theoretical volume of hydraulic oil necessary for a rotation of the driving shaft

H5.2 Pressure p [bar]

Hydraulic pressure applied to the motor when running.

H5.3 Flow rate Q [l / min]

Hydraulic oil flow through the motor when running.

H5.4 Efficiency η_t

Total efficiency of the hydraulic motor given by:

$$\eta_t = \eta mh \times \eta v \quad (38)$$

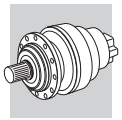

H5.5 Mechanical-hydraulic efficiency ηmh

This is the ratio of actual torque to theoretical torque at the driving shaft. Value depending on inner losses due to mechanical friction as well as hydraulic fluid pressure losses, calculated as follows:

$$\eta mh = \frac{2\pi \times 10 \times M}{(pA - pB) \times V} \quad (39)$$

H5.6 Hydraulic efficiency ηv

This is the ratio of motor actual speed to motor theoretical speed. Value depending on the motor inner blow-by between high and low pressure volumes. This value is given by the following formula:

$$\eta v = \frac{n \times V}{Q \times 1000} \quad (40)$$

H5.7 Angular speed n [min-1]

Hydraulic motor rotation speed. Value resulting from the following formula:

$$n = \frac{Q \times 1000}{V} \times \eta v \quad (41)$$

H5.8 Torque M [Nm]

Actual torque transmitted by the hydraulic motor. Value given by the following formula:

$$M = \frac{(p\,A - p\,B) \times V}{2\pi \times 10} \times \eta mh \quad (42)$$

H6 DESIGNATION

MG 050 SD_R P010

PORTS

P010 = oil ports on motor housing direct — with brake

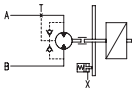

without brake

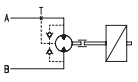

B02P = oil ports with valve brake pilot — with brake

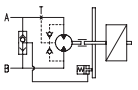

CONSTRUCTIVE SERIES

DISPLACEMENT

050	51.60	cm³	**160**	159.60	cm³
080	80.30	cm³	**200**	199.80	cm³
100	99.80	cm³	**250**	249.30	cm³
125	125.70	cm³			

ORBIT MOTOR TYPE MG

H7 DISPLACEMENT SELECTION

Displacement V of the hydraulic motor should be selected together with the gearbox.

Once the output torque and speed n_2 for the gearbox M_{r2} is known, proceed as follows:

Define the control pressure value pA-pB ≤ 175 bar for the motor.

Calculate the gearbox displacement value called Veq with the following formula:

$$Veq = \frac{2\pi \times 10 \times M_{r2}}{(pA - pB) \times \eta mh \times \eta d} \ [cm^3] \quad (43)$$

where ηmh, for example, is equal to 0.85;
η_d: gearbox dynamic efficiency, consider 0.94.

Calculate the value for flow rate Q, necessary for feeding the hydraulic motor, with the following formula:

$$Q = \frac{n_2 \times Veq}{1000 \times \eta v} \ [l/min] \quad (44)$$

where ηv, for example, is equal to 0.90.

− Select the gearbox size with M_{r2} and n_2.

− Look up the diagram (A23) for the gearmotor with equivalent displacement value Veq and select:
- a motor that fulfils the p int. and Q requirements and at the same time.
- the indicative value of reduction ratio i. Please consider that ratio should be obtained with as few reduction stages as possible, to save on gearmotor costs and contain dimensions.

Once you have determined the value of M_2 and the indicative value of i, select the gearbox and check your selection as indicated in chapt. 13.5.

H8 CHECKING

Check that pressure, efficiency and flow rate values correspond with values indicated in Table (A24 and A25) on motor technical features.

H9 TECHNICAL DATA MG MOTORS

(A 23)

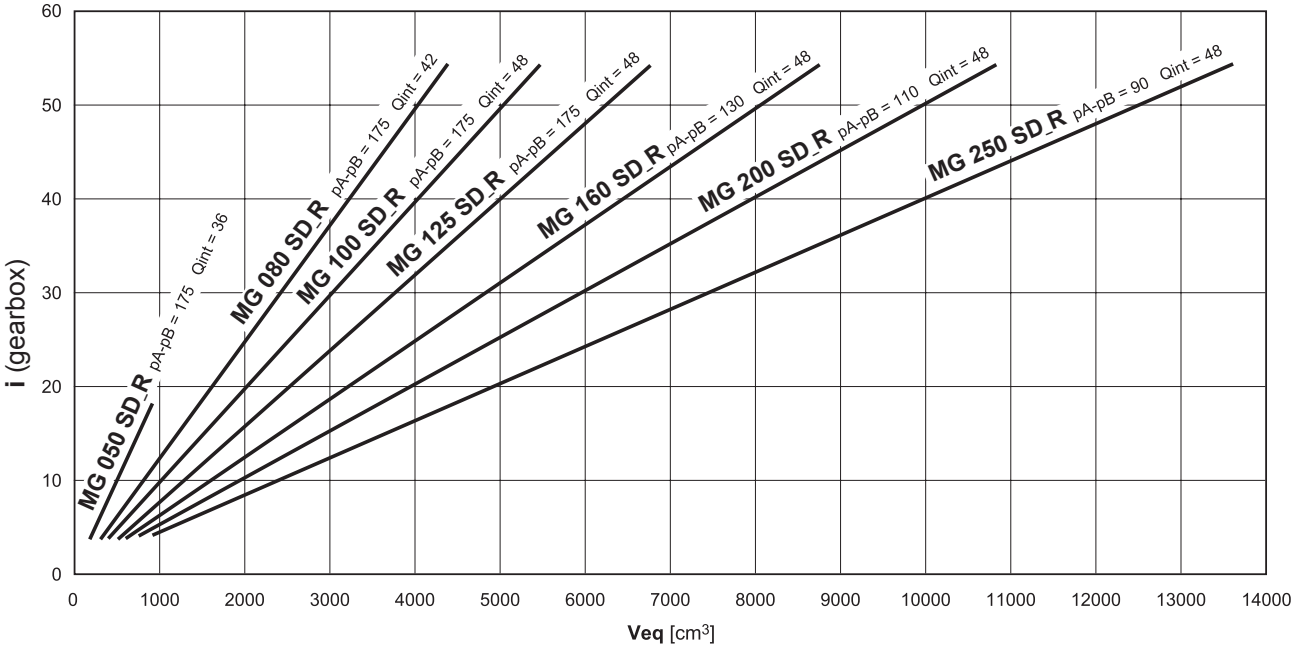

(A 24)

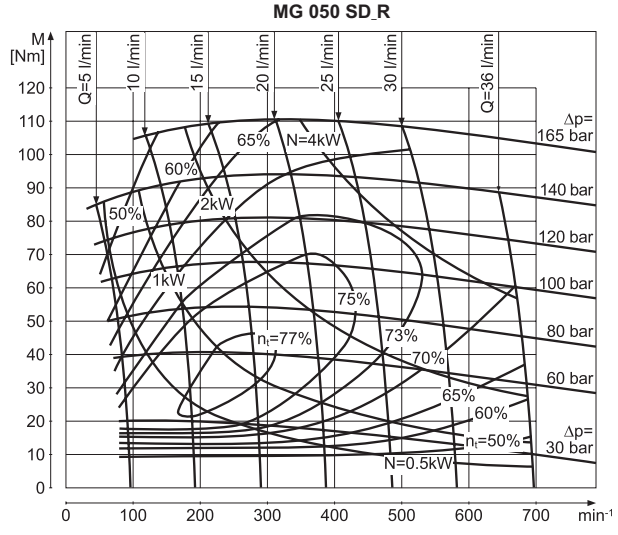

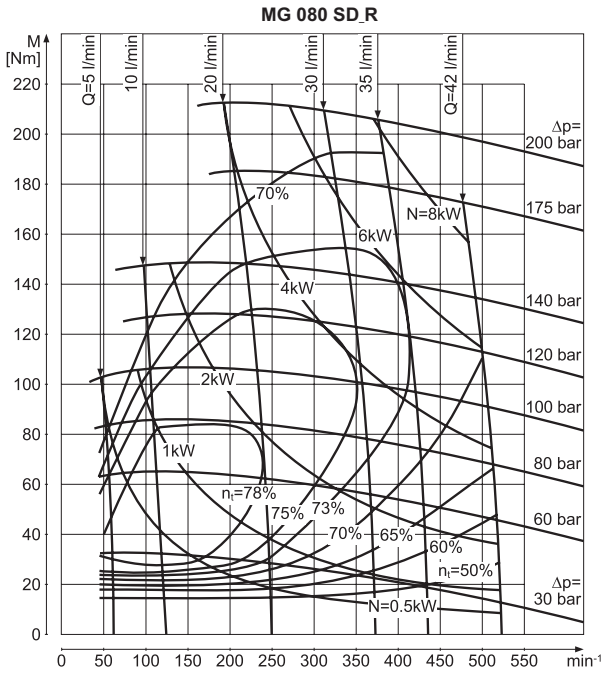

Bonfiglioli Riduttori

(A 25)

MG 100 SD_R

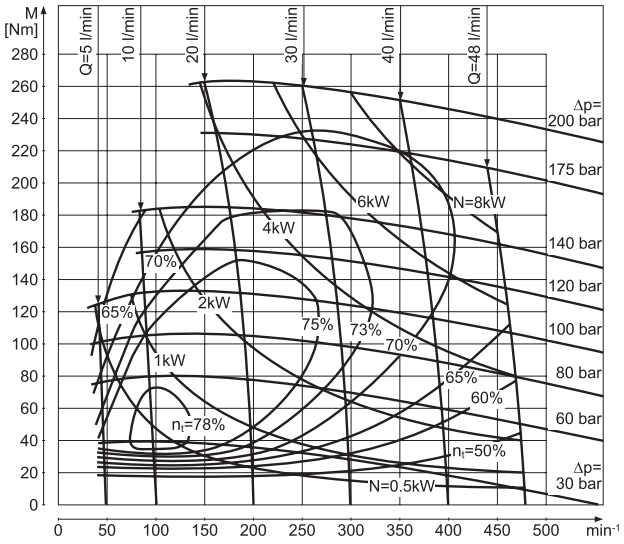

MG 125 SD_R

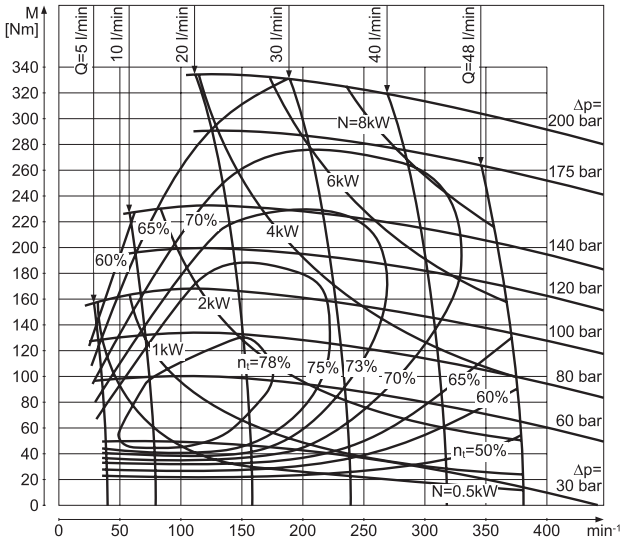

MG 160 SD_R

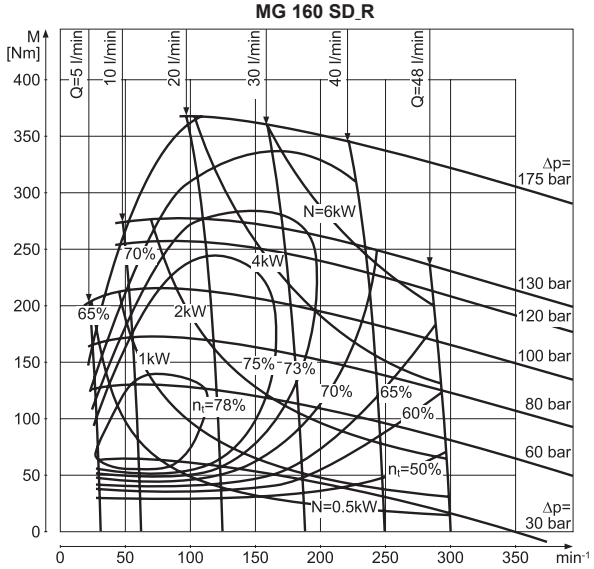

MG 200 SD_R

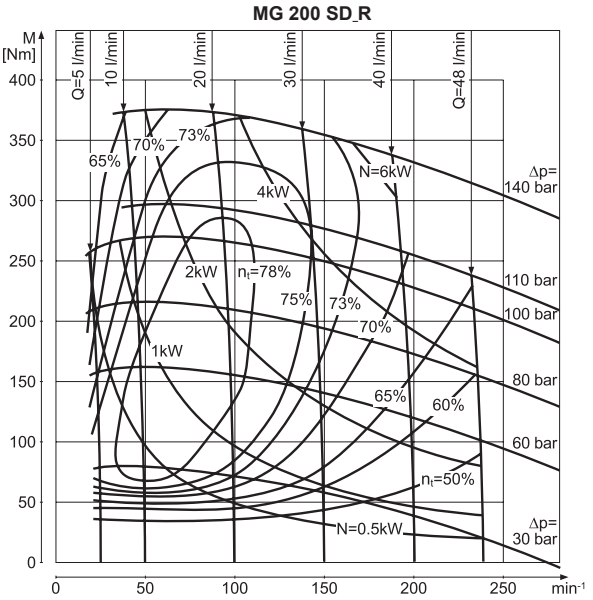

MG 250 SD_R

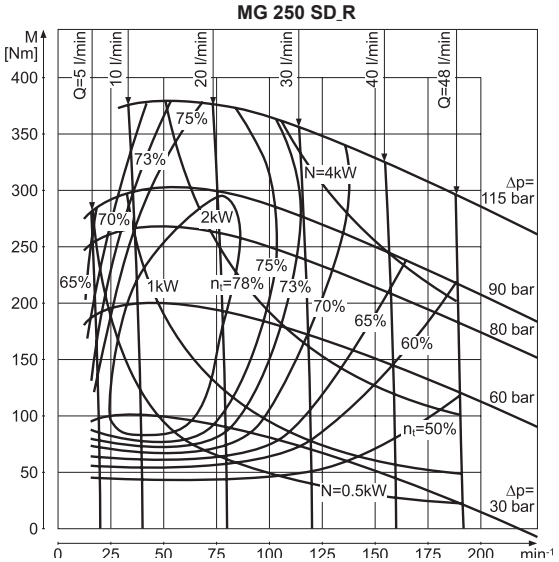

MG-**P010

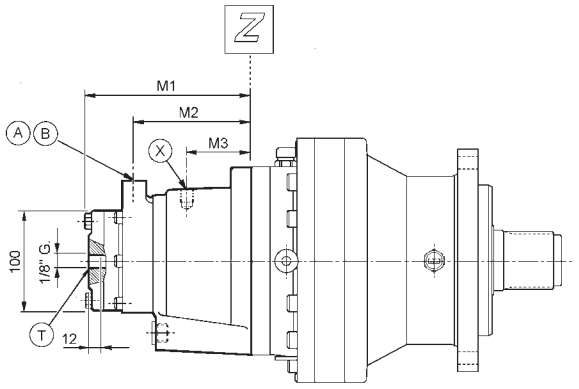

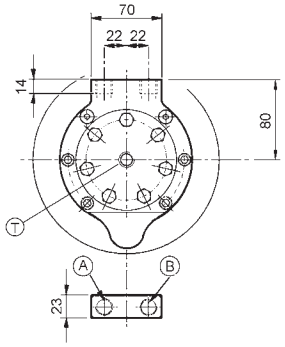

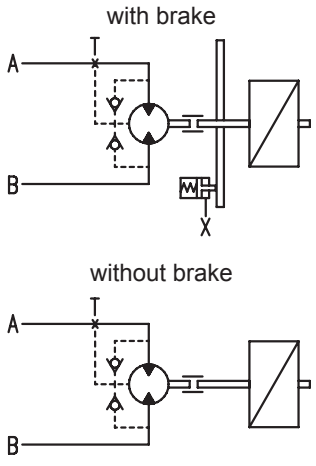

PORTS

A - B = 3/8" G 19TPI
T = 1/8" G 28TPI
X = 1/4 G 19TPI

MG-**B02P

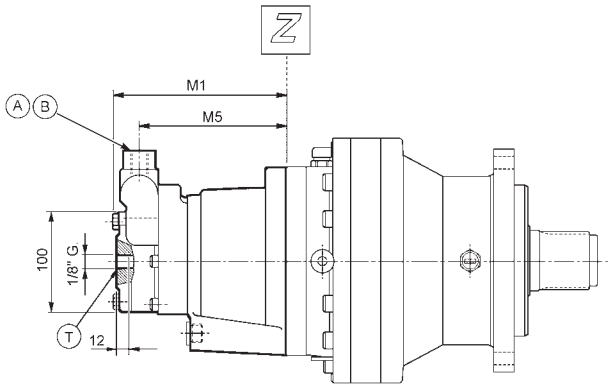

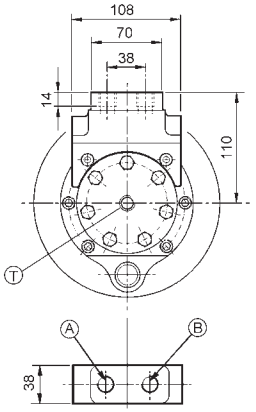

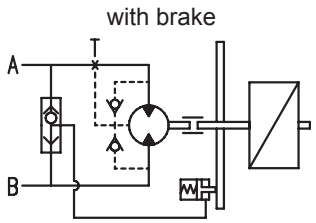

(A 26)

Suitable gearbox	Motor							Execution		
	MG 050	MG 080	MG 100	MG 125	MG 160	MG 200	MG 250	P010		B02P
	M1							M2	M3	M5
300 L1 - L2 - R2	162	167	171	175	181			113	60	143
301 L1 - L2 - R2	162	167	171	175	181	188	197	113	60	143
303 L1					203	210	219	135	77	165
303 L2 - R2	162	167	171	175	181	188	197	113	60	143
304 L1				197	203	210	219	135	77	165
304 L2 - R2	162	167	171	175	181	188	197	113	60	143
305 L1					203	210	219	135	77	165
305 L2 - R2	162	167	171	175	181	188	197	113	60	143
306 L2					203	210	219	135	77	165
306 R2 - R3	162	167	171	175	181	188	197	113	60	143
307 L2					203	210	219	135	77	165
307 R2 - R3	162	167	171	175	181	188	197	113	60	143

H11 TECHNICAL DATABRAKES FOR MG MOTORS

(A 27)

		Brake TYPE 3				Brake TYPE 4			
		3E	**3I**	**3L**	**3N**	**4K**	**4N**	**4R**	**4U**
Brake torque Mf	Nm]	120	200	280	350	260	320	430	620
Min. opening pressure	[bar]	16	28	28	35	25	30	24	34
Max. operating pressure	[bar]	200							
Oil volume for brake release	[cc]	6.43	6.43	6.43	6.43	6.65	6.65	6.65	6.65

(A 28)

Suitable gearbox	Motor													
	MG 050		**MG 080**		**MG 100**		**MG 125**		**MG 160**		**MG 200**		**MG 250**	
	Mf [Nm]		Mf [Nm]		Mf [Nm]		Mf [Nm]		Mf [Nm]		Mf [Nm]		Mf [Nm]	
300 L1 - L2	120	**3E**	200	**3I**	280	**3L**	350	**3N**	350	**3N**				
300 R2	120	**3E**	200	**3I**	280	**3L**								
301 L1 - L2			200	**3I**	280	**3L**	350	**3N**	350	**3N**	350	**3N**	350	**3N**
301 R2	120	**3E**	200	**3I**	280	**3L**	350	**3N**	350	**3N**				
303 L1									430	**4R**	430	**4R**	430	**4R**
303 L2	120	**3E**	200	**3I**	280	**3L**	350	**3N**	350	**3N**	350	**3N**		
303 R2	120	**3E**	200	**3I**	280	**3L**	350	**3N**	350	**3N**	350	**3N**		
304 L1							350	**3N**	430	**4R**	430	**4R**	430	**4R**
304 L2	120	**3E**	200	**3I**	280	**3L**	350	**3N**	350	**3N**	350	**3N**		
304 R2	120	**3E**	200	**3I**	280	**3L**	350	**3N**	350	**3N**	350	**3N**		
305 L1									430	**4R**	430	**4R**	430	**4R**
305 L2	120	**3E**	200	**3I**	280	**3L**	350	**3N**	350	**3N**	350	**3N**		
305 R2	120	**3E**	200	**3I**	280	**3L**	350	**3N**	350	**3N**	350	**3N**		
306 L2			260	**4K**	260	**4K**	430	**4R**	430	**4R**	430	**4R**	430	**4R**
306 R2 - R3			200	**3I**	280	**3L**	350	**3N**	350	**3N**	350	**3N**		
307 L2					260	**4K**	430	**4R**	430	**4R**	430	**4R**	430	**4R**
307 R2 - R3			200	**3I**	280	**3L**	350	**3N**	350	**3N**	350	**3N**	350	**3N**

H12 INSTALLATION

Further to standards on gearbox installation, refer to chapter 14, comply with the following hydraulic motor installation instructions.

a) Connection to the hydraulic circuit

Motors can be connected either to closed or open circuits.
In case of an open circuit, solenoid valve or control distributor can be of the closed or open center type.

The hydraulic motor delivery side should always have a max. pressure valve set to a value not exceeding the p_{int} value allowed for the hydraulic motor. See hydraulic diagrams (A29).

(A 29)

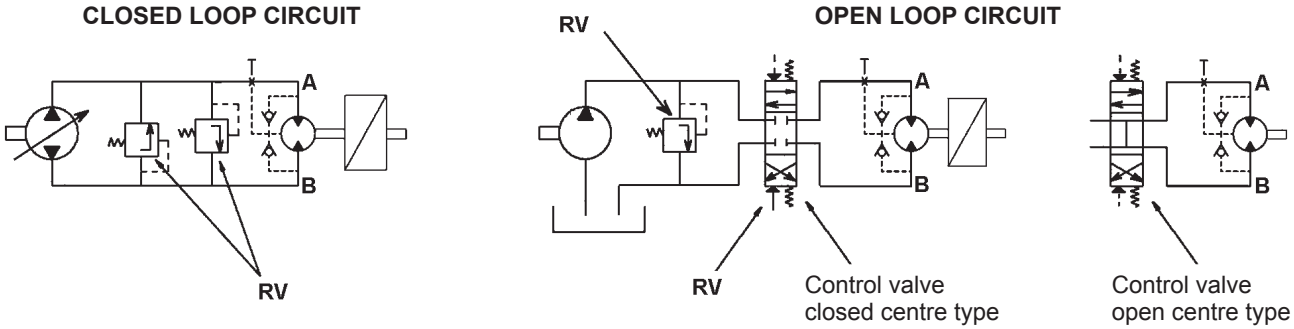

RV = Max pressure valve set to a pRV < pmax

If not possible, because the circuits control other devices needing a higher pressure and/or a closed center control valve is fitted and the motor controls parts with a high moment of inertia, max. pressure secondary valves should be as close as possible to the motor. See diagram (A30).

(A 30)

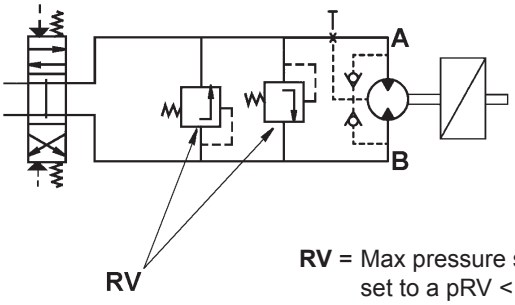

RV = Max pressure secondary valve set to a pRV < pmax

b) Connecting drain port T

These motors have a 1/8" G drain hole in the centre of the cover. The motor is supplied with the port closed by a metal plug (see figure below).
Two non-return valves are incorporated in the motor casing to maintain internal pressure at the same level as the low pressure line A or B if the drain port is not connected to the tank.

(A 31)

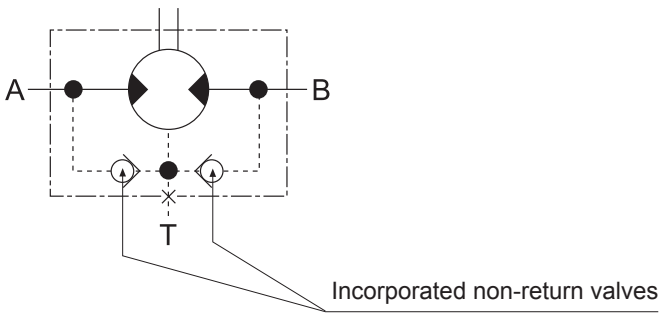

1) If the drain port is connected up, pressure at the shaft seal is always equal to the pressure in the drain line.

2) If the drain port is closed off, pressure at the shaft seal never exceeds pressure in the return line.

The maximum values for pressure in the drain line (case 1) or return line (case 2) are given in the following figure (for continuous and intermittent operating conditions).

(A 32)

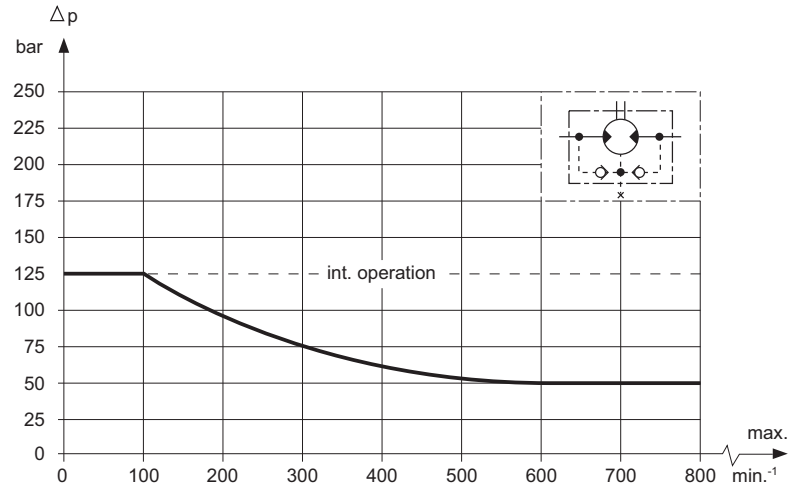

The drain port must always be connected up when more motors are operated in series.

c) Brake control

For gearmotors equipped with brakes, there are two motor versions available, i.e. the B02P or P010 executions.
In the B02P version, the motor has an in-built, direct brake control system. In the P010 version, an auxiliary branching is required to control the brake. See the following diagram.

(A 33)

OPEN LOOP CIRCUIT

Control valve open centre type

Motor execution **B02P**

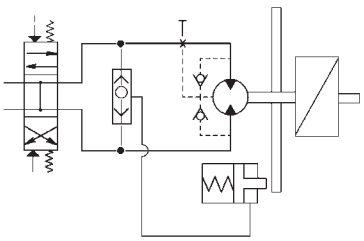

Control valve closed centre type

Motor execution **P010**

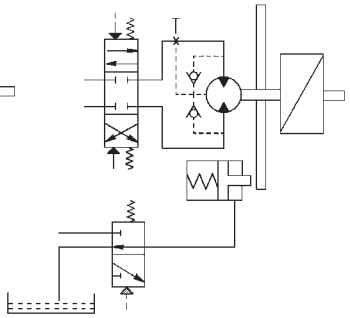

CLOSED LOOP CIRCUIT

Motor execution **P010**

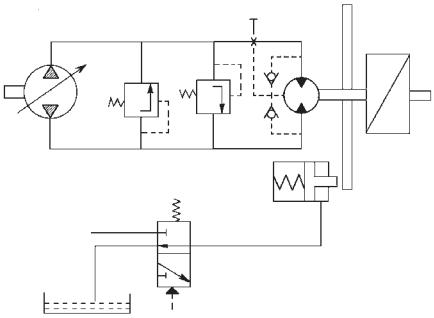

d) Hydraulic oil

Use hydraulic mineral oil with viscosity ISO VG 46 (46 Cst at t = 40°C).
It is recommended the oil temperature should be between +30°C and +70°C.

e) Oil filtering

For reliable motor operation and long life, it is important that the hydraulic circuit has a filter for a proper oil filtering according to the following degree:

degree 9 NAS 1638
degree 6 SAE
degree 18/15 SO DIS 4406

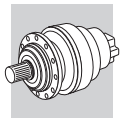

PLANETARY GEARBOX SERIES 300 ATEX CONFIGURATION

A1 SCOPE OF DOCUMENT

This Technical Bulletin serves as an aid for the selection of 300 series planetary gear units intended for installation in explosion risk areas, classified according to Directive 1999/92/EC.

This Technical Bulletin is an integral part of the 300 series, and subsequent revisions, and has the following scope:
• describes the **constructional characteristics** of the reducers comply with the old “ATEX” Directive 94/9 / EC and comply with the new directive 2014/34 / EU, where these differ from those of standard construction gear units - See section A4.2.
• specifies the **selection criteria** approved by the manufacturer that said gear units operate keeping the minimum security requirements required by the old Directive 94/9 / EC and required by new Directive 2014/34 / EU - See section A4.4.

A2 INTRODUCTION TO THE ATEX DIRECTIVES

Under the provisions of Directive 94/9/EC, an explosive atmosphere is defined as a mixture:
a) of **flammable substances**, whether gas, vapour, mist or dust;
b) with **air;**
c) in certain **atmospheric conditions**;
d) in which, following ignition, combustion spreads to the entire unburned mixture (note that in the case of dust, the entire quantity of dust is not always completely burnt after combustion).
An atmosphere which may potentially be transformed into an explosive atmosphere due to operating and/or ambient conditions is defined as a **potentially explosive atmosphere**. The products governed by Directive
94/9/EC are intended for use only in a potentially explosive atmosphere defined in this way.

European harmonised ATEX standards
The European Union has issued two harmonisation guidelines in the area of health and safety. Directive
94/9/EC stipulates the minimum safety requirements for products intended for use in explosion risk areas within the member countries of the European Union. The directive also assigns such equipment to **categories**, which are defined by the directive itself.
Directive 1999/92/EC defines the minimum health and safety requirements for the workplace, for working conditions and for the handling of products and materials in explosion risk areas. The directive also divides the workplace into zones and defines the criteria for the application of product **categories** in said **zones.** The following table describes the **zones** into which the user of a plant, in which an explosive atmosphere may occur, is required to divide the equipment application areas.

Zones		Formation frequency of a potentially explosive atmosphere	Type of danger
Gaseous atmosphere G	Dusty atmosphere D		
0	20	Present continuously or for long periods	Permanent
1	21	Likely to occur in normal operation occasionally	Potential
2	22	Not likely to occur in normal operation but if it does occur will persist for short period only	Minimal

BONFIGLIOLI TECHNICAL SERVICE

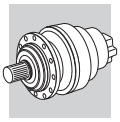

BONFIGLIOLI RIDUTTORI gear units selected in this catalogue are suitable for installation in zones 1, 21, as highlighted in light gray in the above table, 2 and 22 sonly on request by contacting our Technical Department, highlighted in dark gray in the diagram above.
The new directive entered into force March 30, 2014. Starting from April 20, 2016, will go to repeal the earlier directive ATEX 94/9 / EC.
The directives apply to mechanical, hydraulic and pneumatic equipment.

Levels of protection for the various categories of equipment
The various categories of equipment must be able to operate in conformity with the Manufacturers operational specifications, at certain defined levels of protection.

Protection level	Category Group I	Category Group II	Type of protection	Operating conditions
Very high	M1		Two independent means of protection or safety capable of operating even when two independent faults occur	The equipment remains powered and operational even in the presence of an explosive atmosphere
Very high		1	Two independent means of protection or safety capable of operating even when two independent faults occur	The equipment remains powered and operational in zones 0, 1, 2 (G) and/or zones 20, 21, 22 (D)
High	M2		Protection suitable for normal operation and heavy duty conditions	Power to the equipment is shut off in the presence of a potentially explosive atmosphere
High		2	Protection suitable for normal operation and frequent faults or equipment in which malfunction is normal.	The equipment remains powered and operational in zones 1, 2 (G) and/or zones 21, 22 (D)
Normal		3	Protection suitable for normal operation	The equipment remains powered and operational in zones 2 (G) and/or 22 (D)

BONFIGLIOLI TECHNICAL SERVICE

Definition of groups (EN 1127-1)
Group I Applies to equipment intended for use underground in parts of mines and those parts of surface installations of such mines, liable to be endangered by firedamp and/or combustible dust.
Group II Applies to equipment intended for use in other places liable to be endangered by explosive atmospheres.

The areas highlighted in grey indicate the only categories in which BONFIGLIOLI RIDUTTORI products may be used. BONFIGLIOLI RIDUTTORI products may not therefore be installed in mines, classified in **Group I**. To summarise, the classification of equipment into groups, categories and zones is illustrated in the table below, where the availability of BONFIGLIOLI RIDUTTORI products is highlighted in grey.

Group	I mines, firedamp		II other potentially explosive areas (gas, dust)					
Category	M1	M2	1		2		3	
Atmosphere(1)			G	D	G	D	G	D
Zone			0	20	1	21	2	22
Type of protection gear uni(2)					c, k	c, k	c, k	c, k

BONFIGLIOLI TECHNICAL SERVICE

(1) **G** = gas **D** = DUST
(2) as per EN13463

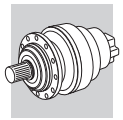

A3 USE, INSTALLATION AND MAINTENANCE

The instructions for safe storage, handling and use of the product are given in the unit's User, Installation and Service Manual.
This document must be kept in a suitable place, in the vicinity of the installed gear unit, as a reference for all persons authorised to work with or on the product throughout its service life.

The Manufacturer reserves the right to modify, supplement or improve the Manual, in the interests of the User.

A4 PECULIARITIES OF 300 SERIES GEAR UNITS COMPLIANT WITH DIRECTIVE ATEX

A4.1 PRODUCT AVAILABILITY

Frame sizes : 300 to 321.

	3...L	3...R	3/V
Configurations	300...321 L 1	- - -	- - -
	300...321 L 2	300...306 R 2	- - -
	300...321 L 3	300...317 R 3	300...307 L 3
	300...321 L 4	300...321 R 4	- - -

Versions	Foot mount		Flange mount			Shaft mount	Agitator (vertical)
	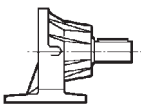	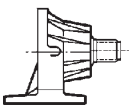	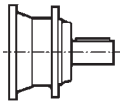	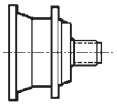	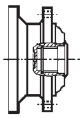	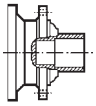	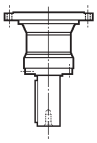
	PC	PZ	MC/HC	MZ/HZ	FZ	FP	VK

Inputs	P(IEC)	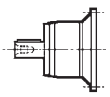 V_	Hydraulic motor connecting
			Standard negative multidisco brake **6** = Type: **4, 5, 6** **A** = Braking torque: **A, B, C, ...**

NOTE:
- With the negative multi disc brake, you must always ensure a minimum pressure for opening the discs. This must be 20% higher than that of the table of the brakes.
- The pressure max. of brake control must not exceed 50 bar.

Accessories	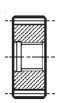			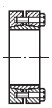	
	P ...	B0A	M0A	G0A	W0A

A4.2 CONSTRUCTIONAL CHARACTERISTICS

• Only synthetic lubricants are used.
• Only VITON® gaskets are used.
• Oil seals are equipped with dust lips.
• Vent plugs are equipped with valves with anti-intrusion springs, to prevent contamination of the lubricant by solid particles.
• Oil filler, drain and level plugs are made from steel and equipped with aluminium lock washers.
• No external metal moving parts in contact with other parts.
• No plastic parts prone to accumulating static charges; if present, such parts are shielded.
• Each gear unit is supplied with an installation drawing indicating the following information:
- main technical characteristics
- installation specifications
- location of oil plugs for the specified mounting position
- lubrication instructions
• The units are fitted with an additional nameplate specifying the product category. For example:

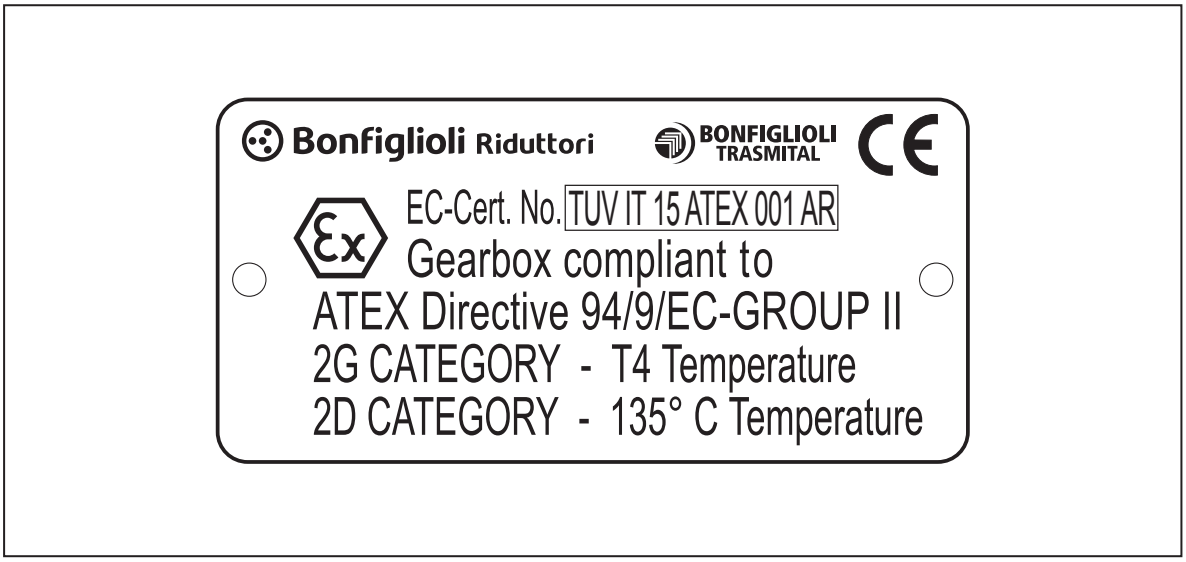

A4.3 OPERATIONAL CHARACTERISTICS

For installation in zones 21 and 22, the Customer must set out and implement a specific cleaning schedule for the unit's surfaces and recesses to prevent build ups of dust exceeding 5 mm in depth.

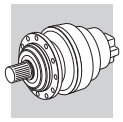

A4.4 SELECTING THE PRODUCT

The gear unit and gearmotor selection procedure is identical to that given in the 300 Series, and any future revisions thereof.
The following chapters contain variations to the procedure given in the catalogue, and subsequent revisions thereof as regards the selection of products compliant today with the old 94/9/EC and complies tomorrow with to new 2014/34/EU, which supersede the procedure specified in the catalogue for units intended for installation in areas without risk of explosion.
These variations primarily affect the following:
" Application of an adjusting factor to the thermal capacity.
" Application of a service factor « f_s » with a greater safety margin.

- Thermal capacity « P_t » [kW]
This parameter is linked to the gearbox thermal limit. Values for the thermal capacity are listed within the rating charts of gearboxes and gearmotors and represent the mechanical power that can be transmitted continuously at an input speed $\mathbf{n_1}$ and at an ambient temperature of 20°C, without the lubricant exceeding the temperature of 85-90°C and the gear case the temperature of 75-80°C, without the use a supplementary cooling system.
When the duty cycle is formed by short operating periods and rest time is long enough for the unit to cool down, the thermal capacity is hardly significant and it may be omitted from calculation.
For ambient temperatures other than 20°C, intermittent duty and drive speed $\mathbf{n_1}$ other than the reference speed listed in the rating charts, $\mathbf{P_t}$ is to be adjusted through thermal factor $\mathbf{f_t}$ and/or speed factor $\mathbf{f_v}$ as listed in the following tables. Finally, make sure that the following condition is always satisfied:

$$\mathbf{P_{r1} \leq P_t \times f_t \times f_v \times f_{Ex}}$$

$\mathbf{f_t}$					
t_a (°C)	Continuous duty	Intermittent duty			
		Intermittence ratio « I »			
		80%	60%	40%	20%
10	1.2	1.3	1.6	1.8	2.0
20	1.0	1.1	1.3	1.5	1.7
30	0.9	1.0	1.2	1.3	1.5
40	0.7	0.8	0.9	1.0	1.2
50	0.5	0.6	0.7	0.8	0.9

n_1 (min^{-1})	$\mathbf{f_v}$
500	1.35
900	1.2
1500	1.0
1800	0.85

$$I = \frac{t_f}{t_f + t_r} \times 100$$

$\mathbf{t_f}$ = operating time under load;
$\mathbf{t_r}$ = rest time.

Frame size	Configuration		reductions	$\mathbf{f_{EX}}$
	in line	right angle		
300...321	L	-	1	0.8
300...321	L	-	2	0.9
300...321	L	-	3 - 4	1.0
300...306	-	R	2	0.8
300...321	-	R	3 - 4	0.9

- Service factor in Atex gearboxes with Negative multidisc brake

POS A, E, F, G Input speed [rpm]: 100 200 300 400 500 600 700 800 900 1000 1100 1200 1300 1400 1500 1600 1700 1800

Size	Stage		
300	L1		
	L2	85%	
	L3	85%	
	L4	85%	
301	L1		
	L2	85%	
	L3	85%	
	L4	85%	
303	L1	85%	
	L2	85%	
	L3	85%	
	L4	85%	
305	L1	85%	
	L2	85%	
	L3	85%	
	L4	85%	
306	L1	85%	
	L2	85%	75%
	L3	85%	
	L4	85%	
307	L1	85%	
	L2	85%	75%
	L3	85%	
	L4	85%	
309	L1	85%	
	L2	85%	75%
	L3	85%	
	L4	85%	
310	L1	no brake	
	L2	85%	
	L3	85%	75%
	L4	85%	
311	L1	no brake	
	L2	85%	
	L3	85%	75%
	L4	85%	
313	L1	no brake	
	L2	85%	
	L3	85%	75%
	L4	85%	
315	L1	no brake	
	L2		
	L3	85%	80%
	L4	85%	75%
316	L1	no brake	
	L2	no brake	
	L3	85%	80%
	L4	85%	75%
317	L1	no brake	
	L2	no brake	
	L3	85%	
	L4	85%	75%
318	L1	no brake	
	L2	no brake	
	L3	85%	80%
	L4	85%	75%
319	L1	no brake	
	L2	no brake	
	L3	85%	
	L4	85%	80%
321	L1	no brake	
	L2	no brake	
	L3	no brake	
	L4	85%	80%

Unusable speed

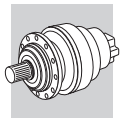

		POS O, Q, T, V Input speed [rpm] 100 200 300 400 500 600 700 800 900 1000 1100 1200 1300 1400 1500 1600 1700 1800
300	**L1**	85%
	L2	85% 70%
	L3	85% 70%
	L4	85% 70%
301	**L1**	85%
	L2	85% 70%
	L3	85% 70%
	L4	85% 70%
303	**L1**	60%
	L2	85% 70%
	L3	85% 70%
	L4	85% 70%
305	**L1**	60%
	L2	85% 70%
	L3	85% 70%
	L4	85% 70%
306	**L1**	50%
	L2	60% 40%
	L3	85% 70%
	L4	85% 70%
307	**L1**	50%
	L2	60% 40%
	L3	85% 70%
	L4	85% 70%
309	**L1**	50%
	L2	60% 40%
	L3	85% 70%
	L4	85% 70%
310	**L1**	no brake
	L2	50% 15% 10%
	L3	60% 40%
	L4	85% 70%
311	**L1**	no brake
	L2	50% 15% 10%
	L3	60% 40%
	L4	85% 70%
313	**L1**	no brake
	L2	50% 15% 10%
	L3	60% 40%
	L4	85% 70%
315	**L1**	no brake
	L2	
	L3	50% 15% 10%
	L4	60% 40%
316	**L1**	no brake
	L2	
	L3	50% 15% 10%
	L4	60% 40%
317	**L1**	no brake
	L2	
	L3	50% 15% 10%
	L4	60% 40%
318	**L1**	no brake
	L2	
	L3	50% 15% 10%
	L4	60% 40%
319	**L1**	no brake
	L2	no brake
	L3	50%
	L4	50% 15% 10%
321	**L1**	no brake
	L2	no brake
	L3	no brake
	L4	50% 15% 10%

Unusable speed

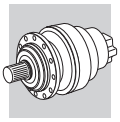

		POS B0, B2, I0, I2, J0, J2, M1, M3, P, R, U, W Input speed [rpm]																	
		100	200	300	400	500	600	700	800	900	1000	1100	1200	1300	1400	1500	1600	1700	1800
300	**R2**	85%									70%								
	R3	85%									70%								
	R4	85%									70%								
301	**R2**	85%									70%								
	R3	85%									70%								
	R4	85%									70%								
303	**R2**	85%									70%								
	R3	85%									70%								
	R4	85%									70%								
305	**R2**	85%									70%								
	R3	85%									70%								
	R4	85%									70%								
306	**R2**	85%									70%								
	R3	85%									70%								
	R4	85%									70%								
307	**R2**	60%														40%			
	R3	85%									70%								
	R4	85%									70%								
309	**R2**	60%														40%			
	R3	85%									70%								
	R4	85%									70%								
310	**R2 (A)**	60%														40%			
	R2 (B)	50%							15%					10%					
	R3	85%									70%								
	R4	85%									70%								
311	**R2 (A)**	60%														40%			
	R2 (B)	50%							15%					10%					
	R2 (C)	50%							15%					10%					
	R3	60%														40%			
	R4	85%									70%								
313	**R2 (A)**	60%																	
	R2 (B)	50%							15%					10%					
	R2 (C)	50%							15%					10%					
	R3	60%														40%			
	R4	85%									70%								
315	**R3 (A)**	60%																	
	R3 (B)	50%							15%					10%					
	R3 (C)	50%							15%					10%					
	R4	60%														40%			
316	**R3 (B)**	50%							15%					10%					
	R3 (C)	50%							15%					10%					
	R4	60%														40%			
317	**R3 (A)**	60%																	
	R3 (B)	50%							15%					10%					
	R3 (C)	50%							15%					10%					
	R4	60%														40%			
318	**R4 (B)**	50%							15%					10%					
	R4 (C)	50%							15%					10%					
319	**R4 (B)**	60%																	
	R4 (C)	50%							15%					10%					
	R4 (C)	50%							15%					10%					
321	**R4 (B)**	60%																	
	R4 (C)	50%							15%					10%					
	R4 (C)	50%							15%					10%					

Unusable speed

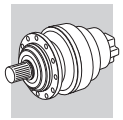

		POS B1, B3, I1, I3, J1, J3, M0, M2 Input speed [rpm] 100 200 300 400 500 600 700 800 900 1000 1100 1200 1300 1400 1500 1600 1700 1800
300	R2	85%
	R3	85%
	R4	85%
301	R2	85%
	R3	85%
	R4	85%
303	R2	85%
	R3	85%
	R4	85%
305	R2	85%
	R3	85%
	R4	85%
306	R2	85%
	R3	85%
	R4	85%
307	R2	85% 75%
	R3	85%
	R4	85%
309	R2	85% 75%
	R3	85%
	R4	85%
310	R2 (A)	85% 75%
	R2 (B)	85%
	R3	85%
	R4	85%
311	R2 (A)	85% 75%
	R2 (B)	85%
	R2 (C)	85%
	R3	85% 75%
	R4	85%
313	R2 (A)	60%
	R2 (B)	85%
	R2 (C)	85%
	R3	85% 75%
	R4	85%
315	R3 (A)	60%
	R3 (B)	85%
	R3 (C)	85%
	R4	85% 75%
316	R3 (B)	85%
	R3 (C)	85%
	R4	85% 75%
317	R3 (A)	85%
	R3 (B)	85%
	R3 (C)	85%
	R4	85% 75%
318	R4 (B)	85%
	R4 (C)	85%
319	R4 (B)	60%
	R4 (C)	85%
	R4 (C)	85%
321	R4 (B)	85%
	R4 (C)	85%
	R4 (C)	85%

Unusable speed

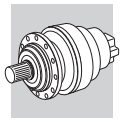

- Service factor « f_s »

Service factor « f_s »						
Duty	Starts / hour	Accumulated operating hours (h)				
		≤ 5000	10000	15000	25000	50000
		Daily operating hours (h)				
	z	h < 4	4 < h < 8	8 < h < 12	12 < h < 16	16 < h < 24
Uniform load	Z < 10	1.10	1.10	1.15	1.30	1.60
	10 < Z < 30	1.10	1.15	1.30	1.50	1.80
	30 < Z < 100	1.10	1.25	1.45	1.60	2.00
Moderate shock load	Z < 10	1.10	1.25	1.45	1.60	2.00
	10 < Z < 30	1.10	1.40	1.60	1.80	2.20
	30 < Z < 100	1.20	1.50	1.70	2.00	2.40
Heavy shock load	Z < 10	1.20	1.50	1.70	2.00	2.40
	10 < Z < 30	1.30	1.60	1.80	2.10	2.60
	30 < Z < 100	1.40	1.75	2.00	2.30	2.80

- Limitation of input speed for single-stage (L1) gearboxes

Frame size	reductions	n_1 (min^{-1}) MAX
300 - 301	L1	1000
303 - 305	L1	700
306 - 309	L1	500
310 - 313	L1	400
315 - 316	L1	300
317 - 321	L1	200

A5 ORDERING NUMBERS

A5.1 DESIGNATION OF IN-LINE (300 L) AND RIGHT ANGLE (300 R) GEAR UNITS

3 | 11 | L | 2 | 16.7 | HZ

OUTPUT VERSION

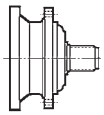
MZ: Splined male shaft

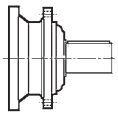
MC: Solid keyed shaft

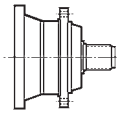
HZ: Heavy duty splined male shaft

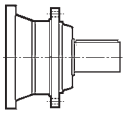
HC: Heavy duty solid keyed shaft

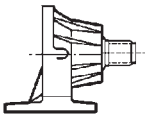
PZ: Foot mounted with splined shaft

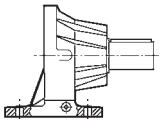
PC: Foot mounted with solid keyed shaft

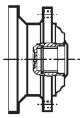
FZ: A Hollow splined shaft

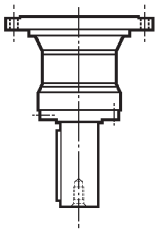
VK: Reinforced output with large solid keyed shaft for stirrers and mixer

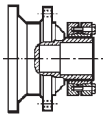
FP: Hollow shaft for shrink disc

GEAR RATIO
Fill in the value of the gear ratio (including point and decimals) as listed in the selection charts
Ex.: 1/44.6 = 44.6 1/131 = 131

REDUCTIONS
1 - 2 - 3 - 4

DESIGN
L = In line

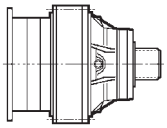
R = Right angle

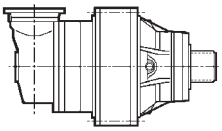

GEARBOX FRAME SIZE

00 = 300	**06** = 306	**11** = 311	**17** = 317
01 = 301	**07** = 307	**13** = 313	**18** = 318
03 = 303	**09** = 309	**15** = 315	**19** = 319
05 = 305	**10** = 310	**16** = 316	**21** = 321

SERIES

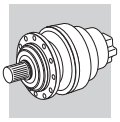

6A **S5EC** **A** **A** **W0A** **EX** **...**

OPTIONS

INPUT SHAFT PREFERENTIAL DIRECTION OF ROTATION
(applicable to angle gear units only)

RA = counterclockwise
RO = clockwise

CONFIGURATION COMPLIANT WITH THE OLD DIRECTIVE 94/9/EC AND AT THE NEW DIRECTIVE 2014/34/EU.

OUTPUT FITTINGS

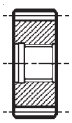

P... = Pinions

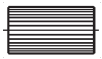

B0A = Splined bar

M0A = Sleeve coupling

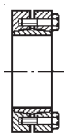

G0A = Shrink disc

W0A = Flange

MOTOR FLANGE ORIENTATION

MOUNTING POSITION

In mounting positions featuring a vertical output shaft, the gearbox will be equipped with an expansion tank.
Please request the installation drawing to Bonfiglioli's Technical Service.

INPUT

Input keyed shaft

	V01A	V01B	V05B	V06B	V07A	V07B	V010B	V011B	V015B
diam.	Ø24	Ø38	Ø48	Ø60	Ø60	Ø80	Ø80	Ø80	Ø120

Electric motor connection **P** + motor size (80,90,100,132,160, ...)

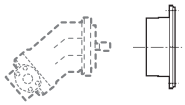

Hydraulic Motor connection **S5AP, COAA, HOBA, ...**

ONLY WITH HYDRAULIC MOTOR ADAPTOR

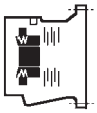

Standard negative multidisc brake
6 = Type: **4, 5, 6**
A = Braking torque: **A, B, C, ...**

Negative multidisc brake for MG hydraulic motor
SF = Without brake

A5.2 DESIGNATION OF COMBINED WORM+PLANETARY (3/V) GEAR UNITS

3/V **05** **L** **3** **623** **PC**

OUTPUT VERSION

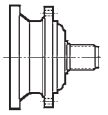
MZ: Splined male shaft

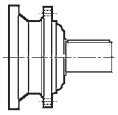
MC: Solid keyed shaft

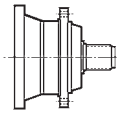
HZ: Heavy duty splined male shaft

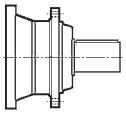
HC: Heavy duty solid keyed shaft

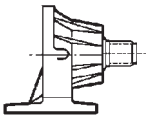
PZ: Foot mounted with splined shaft

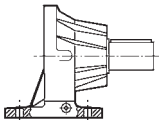
PC: Foot mounted with solid keyed shaft

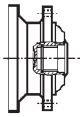
FZ: A Hollow splined shaft

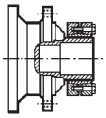
FP: Hollow shaft for shrink disc

GEAR RATIO
Fill in the value of the gear ratio (including point and decimals) as listed in the selection charts
Ex.: 1/773 = 773

REDUCTIONS
3

DESIGN
L = Combined 300 unit, 2 planetary stages + worm gear units

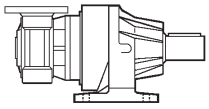

GEARBOX FRAME SIZE
00 = 3/V 00 **06** = 3/V 06
01 = 3/V 01 **07** = 3/V 07
03 = 3/V 03
05 = 3/V 05

SERIES
Combined 300 gearboxes / Worm gear units

P80 **B5** **AF** **W0A** **EX**

CONFIGURATION COMPLIANT WITH THE OLD DIRECTIVE
94/9/EC AND AT THE NEW DIRECTIVE 2014/34/EU.

OUTPUT FITTINGS

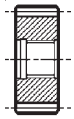

P... = Pinions

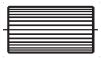

B0A = Splined bar

M0A = Sleeve coupling

G0A = Shrink disc

W0A = Flangia

MOUNTING POSITION

MOTOR EXECUTION
B5, B14

INPUT

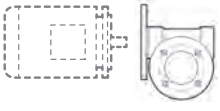

Electric motor connection
P + motor size (80,90,100,132,160, ...)

Input keyed shaft
HS

A6 DECLARATION OF CONFORMITY

The Declaration of Conformity, is the document which attests to the conformity of the product to Directive 94/9/EC.
The validity of the Declaration is bound to observance of the instructions given in the User, Installation and Service Manual for safe use of the product throughout its service life.
This can be downloaded from www.bonfiglioli.com where the manual is available in PDF format in a number of languages.
The instructions regarding ambient conditions are of particular importance inasmuch as failure to observe them during operation of the product renders the certificate null and void. In case of doubt regarding the validity of the certificate of conformity, contact the BONFIGLIOLI RIDUTTORI technical department.

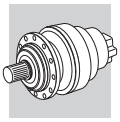

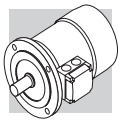

M1 SYMBOLS AND UNITS OF MEASUREMENT

Symbols	Units of Measure	Description
$\cos\varphi$	–	Power factor
η	–	Efficiency
f_m	–	Power adjusting factor
I	–	Cyclic duration factor
I_N	[A]	Rated current
I_S	[A]	Locked rotor current
J_C	[Kgm^2]	Load moment of inertia
J_M	[Kgm^2]	Moment of inertia
K_c	–	Torque factor
K_d	–	Load factor
K_J	–	Inertia factor
M_A	[Nm]	Mean breakaway torque
M_B	[Nm]	Brake torque
M_N	[Nm]	Rated torque
M_L	[Nm]	Counter-torque during acceleration
M_S	[Nm]	Starting torque

Symbols	Units of Measure	Description
n	[min^{-1}]	Rated speed
P_B	[W]	Power drawn by the brake at 20°C
P_n	[kW]	Motor rated power
P_r	[kW]	Required power
t_1	[ms]	Brake response time with one-way rectifier
t_{1s}	[ms]	Brake response time with electronic-controlled rectifier
t_2	[ms]	Brake reaction time with a.c. disconnect
t_{2c}	[ms]	Brake reaction time with a.c. and d.c. disconnect
t_a	[°C]	Ambient temperature
t_f	[min]	Work time at constant load
t_r	[min]	Rest time
W	[J]	Braking work between service interval
W_{max}	[J]	Maximum brake work for each braking
Z	[1/h]	Permissible starting frequency, loaded
Z_0	[1/h]	Max. permissible unloaded starting frequency (I = 50%)

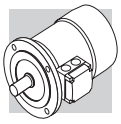

M2 GENERAL CHARACTERISTICS

M2.1 Production range

The asynchronous three-phase electric motors of BONFIGLIOLI RIDUTTORI's production, are available in basic designs IMB5 and IMB14 and derived versions, with the following polarities: 2, 4, 6, 2/4, 2/6, 2/8, 2/12.
The technical characteristics of compact motors, M type, are also supplied in this manual.

M2.2 Standards

The motors described in this catalogue are manufactured to the applicable standards shown in the following table.

(F 1)

Title	CEI	IEC
General requirements for rotating electrical machines	**CEI EN 60034-1**	**IEC 60034-1**
Terminal markings and direction of rotation of rotating machines	**CEI 2-8**	**IEC 60034-8**
Methods of cooling for electrical machines	**CEI EN 60034-6**	**IEC 60034-6**
Dimensions and output ratings for rotating electrical machines	**EN 50347**	**IEC 60072**
Classification of degree of protection provided by enclosures for rotating machines	**CEI EN 60034-5**	**IEC 60034-5**
Noise limits	**CEI EN 60034-9**	**IEC 60034-9**
Classification of type of construction and mounting arrangements	**CEI EN 60034-7**	**IEC 60034-7**
Rated voltage for low voltage mains power	**CEI 8-6**	**IEC 60038**
Vibration level of electric machines	**CEI EN 60034-14**	**IEC 60034-14**

The motors also comply with foreign standards adapted to IEC 60034-1 as shown here below.

(F 2)

DIN VDE 0530	Germany
BS5000 / BS4999	Great Britain
AS 1359	Australia
NBNC 51 - 101	Belgium
NEK - IEC 34	Norway
NF C 51	France
OEVE M 10	Austria
SEV 3009	Switzerland
NEN 3173	Netherlands
SS 426 01 01	Sweden

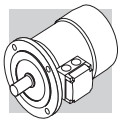

M2.3 Motors for USA and Canada

CUS

BN motors are available in NEMA Design C configuration (concerning electrical characteristics), in compliance with CSA (Canadian standard) C22.2 No. 100 and UL (Underwriters Laboratory) UL 1004-1. By specifying the option CUS the name plate is marked with both symbols shown here below.

C US

US power mains voltages and the corresponding rated voltages to be specified for the motor are indicated in the following table:

(F 3)

Frequency	Mains voltage	V_{mot}
60 Hz	208 V	**200 V**
	240 V	**230 V**
	480 V	**460 V**
	600 V	**575 V**

CUS option is applicable onto 50 Hz operating motors as well.

Motors with YY/Y connection (e.g. 230/460-60; 220/440-60) feature, as standard, a 9-stud terminal board. For same executions, as well as for 575V-60H tions, as well as for 575V-60Hz supply, the nominal rating is coincident with the correspondent 50Hz rating.
For DC brake motors type BN/M_FD and BN/M_AFD, the rectifier is connected to a single-phase 230 VAC supply voltage in the motor terminal box.
Brake power supply for brake motors is as follows:

(F 4)

BN_FD ; BN_AFD M_FD ; M_AFD
Wired to terminal box 1~230V a.c.

BN_FA ; BN_BA M_FA		Specify
Separate power supply	230V Δ - 60Hz	230SA
Separate power supply	460V Y - 60Hz	460SA

The CUS option does not apply to servo-ventilated motors or motors with the AFD brake.

M2.4 China Compulsory Certification

CCC

Electric motors destined for sale in the People's Republic of China have to be certified under the CCC (China Compulsory Certification) system. BN motors of up to 7 Nm in rated torque are available with CCC certification and a special nameplate bearing the mark shown below:

The CCC option does not apply to motors with the AFD brake.
CCC option is not currently available for servo - ventilated motors.

M2.5 Directives 2006/95/EC (LVD) and 2004/108/EC (EMC)

BN and M motors meet the requirements of Directives 2006/95/EC (Low Voltage Directive) and 2004/108/EC (Electromagnetic Compatibility Directive) and their name plates bear the CE mark.
As for the EMC Directive, construction is in accordance with standards CEI EN 60034-1, EN 61000-6-2, EN 61000-6-4.
Motors with FD and AFD brakes, when fitted with the suitable capacitive filter at rectifier input (option **CF**), meet the emission limits required by Standard EN 61000-6-3:2007 "Electromagnetic compatibility - Generic Emission Standard - Part 6-3 Residential, commercial and light industrial environment".
Motors also meet the requirements of standard CEI EN 60204-1 "Electrical equipment of machines".
The responsibility for final product safety and compliance with applicable directives rests with the manufacturer or the assembler who incorporate the motors as component parts.

M2.6 Tolerances

As per the Norms applicable the tolerances here below apply to the following quantities.

(F 5)

-0.15 (1 - η) P ≤ 50kW	Efficiency
-(1 - cosφ)/6 min 0.02 max 0.07	Power factor
±20% *	Slip
+20%	Locked rotor current
-15% +25%	Locked rotor torque
-10%	Max. torque

* ± 30% for motors with Pn < 1 kW

M3 MECHANICAL FEATURES

M3.1 Versions

EC-normalised BN motors are available in the design versions indicated in table (F6) as per Standards CEI EN 60034-14.

Mounting versions are:

IM B5 (basic)
IM V1, IM V3 (derived)
IM B14 (basic)
IM V18, IM V19 (derived)

IM B5 design motors can be installed in positions IM V1 and IM V3; IM B14 design motors can be installed in positions IM V18 and IM V19.
In such cases, the basic design IM B5 or IM B14 is indicated on the motor name plate.
In design versions with a vertically located motor and shaft downwards, it is recommended to request the drip cover (always necessary for brake motors). This facility, included in the option list should be specified when ordering as it does not come as a standard device

(F 6)

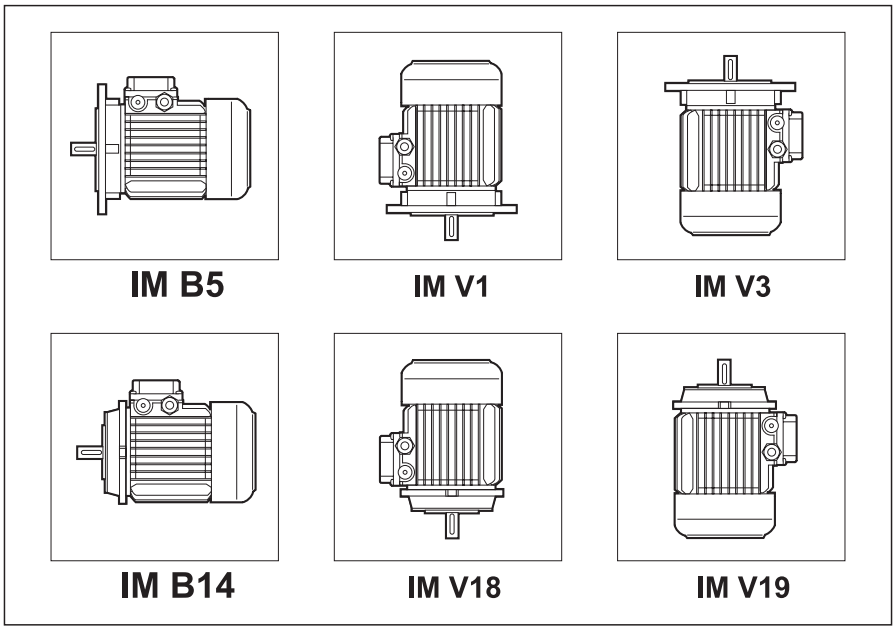

Flanged motors can be supplied with a reduced mounting interface, as shown in chart (F7) below.

(F 7)

	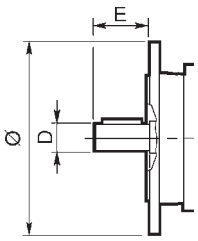					
	BN 71	**BN 80**	**BN 90**	**BN 100**	**BN 112**	**BN 132**
	DxE - Ø					
B5R (1)	11x23 - 140	14x30 - 160	19x40 - 200	24x50 - 200	24x50 - 200	28x60 - 250
B14R (2)	11x23 - 90	14x30 - 105	19x40 - 120	24x50 - 140	—	—

(1) flange with through holes
(2) flange with threaded holes

M3.2 Degree of protection

IP..

The following chart provides an overview of the degrees of protection available.
In addition to the degree of protection specified when ordering, motors to be installed outdoors require protection against direct sunlight and also – when they are to be installed vertically down – a drip cover to prevent the ingress of water and soli
the ingress of water and solid particles (option **RC**).

(F 8)

		IP 54	**IP 55**	**IP 56**
BN	**M**	⛔	standard	
BN_FD **BN_AFD** **BN_FA**	**M_FD** **M_AFD** **M_FA**	standard		⛔

M3.3 Cooling

The motors are externally ventilated (IC 411 to CEI EN 60034-6) and are equipped with a plastic fan working in both directions.
The motors must be installed allowing sufficient space between fan cowl and the nearest wall to ensure free air intake and allow access for maintenance purposes on motor and brake, if supplied.
Independent, forced air ventilation (IC 416) can be supplied on request (option U1).
This solution enables to increase
the motor duty factor when driven by an inverter and operating at reduced speed.

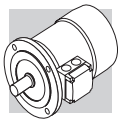

M3.4 Direction of rotation

Rotation is possible in both directions. If terminals U1, V1, and W1 are connected to line phases L1,L2 and L3, clockwise rotation (looking from drive end) is obtained. For counterclockwise rotation, switch two phases.

M3.5 Noise

Noise levels, measured using the method prescribed by ISO 1680 Standards, are within the maximum levels specified by Standards CEI EN 60034-9.

M3.6 Vibrations and balancing

Rotor shafts are balanced with half key fitted and fall within the vibration class N, as per Standard CEI EN 60034-14.
If a further reduced noise level is required improved balancing carequired improved balancing can be optionally requested (class B).
Table below shows the value for the vibration velocity for standard (A) and improved (B) balancing.

(F 9)

Vibration class	Angular velocity n [min^{-1}]	Limits of the vibration velocity [mm/s] **BN 56 ≤ H ≤ BN 200** **M05 ≤ H ≤ M5**
A	600 < n < 3600	1.6
B	600 < n < 3600	0.70

Values refer to measures with freely suspended motor in unloaded conditions.

M3.7 Terminal box

Terminal board features 6 studs for eyelet terminal connection.
A ground terminal is also supplied for earthing of the equipment.
Terminals number and type are shown in the following table.
For brake power supply, please read par. M6, M7 (brake FD and AFD), M8, M9 (brake FA).
Brakemotors house the a.c./d.c. rectifier (factory pre-wired) inside the terminal box.
Wiring instructions are provided either in the box or in the user manual.

(F 10)

		No. of terminals	Terminal threads	Wire max cross section area mm^2
BN 56...BN 71	**M05, M1**	6	M4	2.5
BN 80, BN 90	**M2**	6	M4	2.5
BN 100...BN 112	**M3**	6	M5	6
BN 132...BN 160MR	**M4**	6	M5	6
BN 160M...BN 180M	**M5**	6	M6	16
BN 180L...BN 200L	**–**	6	M8	25

M3.8 Cable entry

The holes used to bring cables to terminal boxes use metric threads in accordance with standard EN 50262 as indicated in the table here after.

(F 11)

		Cable entry	Max. cable diameter allowed [mm]
BN 63	**M05**	2 x M20 x 1.5	13
BN 71	**M1**	2 x M25 x 1.5	17
BN 80 - BN 90	**M2**	2 x M25 x 1.5	17
BN 100	**M3**	2 x M32 x 1.5	21
		2 x M25 x 1.5	17
BN 112	**—**	2 x M32 x 1.5	21
		2 x M25 x 1.5	17
BN 132...BN 160MR	**M4**	4 x M32 x 1.5	21
BN 160M...BN 200L	**M5**	2 x M40 x 1.5	28

M3.9 Bearings

Life lubricated preloaded radial ball bearings are used, types are shown in the chart here under.
Calculated endurance lifetime L_{10h}, as per ISO 281, in unloaded condition, exceeds 40000 hrs.
DE = drive end
NDE = non drive end

(F 12)

	DE	**NDE**	
	M, M_FD, M_AFD, M_FA	**M**	**M_FD, M_AFD, M_FA**
M05	6004 2Z C3	6201 2Z C3	6201 2RS C3
M1	6004 2Z C3	6202 2Z C3	6202 2RS C3
M2	6007 2Z C3	6204 2Z C3	6204 2RS C3
M3	6207 2Z C3	6206 2Z C3	6206 2RS C3
M4	6309 2Z C3	6308 2Z C3	6308 2RS C3
M5	6309 2Z C3	6309 2Z C3	6309 2RS C3

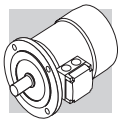

(F 13)

	DE	NDE	
	BN, BN_FD, BN_AFD, BN_FA	BN	BN_FD, BN_AFD, BN_FA
BN 56	6201 2Z C3	6201 2Z C3	–
BN 63	6201 2Z C3	6201 2Z C3	6201 2RS C3
BN 71	6202 2Z C3	6202 2Z C3	6202 2RS C3
BN 80	6204 2Z C3	6204 2Z C3	6204 2RS C3
BN 90	6205 2Z C3	6205 2Z C3	6305 2RS C3
BN 100	6206 2Z C3	6206 2Z C3	6206 2RS C3
BN 112	6306 2Z C3	6306 2Z C3	6306 2RS C3
BN 132	6308 2Z C3	6308 2Z C3	6308 2RS C3
BN 160MR	6309 2Z C3	6308 2Z C3	6308 2RS C3
BN 160M/L	6309 2Z C3	6309 2Z C3	6309 2RS C3
BN 180M	6310 2Z C3	6309 2Z C3	6309 2RS C3
BN 180L	6310 2Z C3	6310 2Z C3	6310 2RS C3
BN 200L	6312 2Z C3	6310 2Z C3	6310 2RS C3

M4 ELECTRICAL CHARACTERISTICS

M4.1 Voltage

Single speed motors are provided in standard execution either for nominal voltage 230 / 400 V Δ/Y, 50 Hz, or 400 / 690 V Δ/Y, 50 Hz, with a voltage tolerance of ± 10%, according to what is specified on the below table.
On all the motors BN and M, for which the voltage / frequency configuration is not included on the below table, the voltage tolerance is reduced down to ± 5%.
For the operation out of the tolerance boundaries, the temperature may exceed by 10 K the limit provided by the adopted insulation class.
The motors are suitable for operation on distribution European grid with voltage complying with the pubblication IEC 60038.

(F 14)

			V_{mot} ± 10 % 3 ~	Configuation
IE1	**BN 56 ... BN 132**	**M0 ... M4**	230 / 400 V - Δ/Y - 50 Hz	Standard
			400 / 690 V - Δ/Y - 50 Hz	On request at no extra charge
			460 V Y - 60 Hz	Standard
	BN 160 ... 200	**M5**	400 / 690 V - Δ/Y - 50 Hz	Standard
			460 V Δ - 60 Hz	Standard

[1] 4 pole motor only

The only rated voltage for motors type 50Hz and all double speed motors is 400V.
Applicable tolerances as per CEI EN 60034-1.

The table below shows the wiring options available.

(F 15)

Pole		Wiring options
2	**BN 63 … BN 200**	Δ / Y (²)
4	**BN 56 … BN 200**	
6	**BN 63 … BN 200**	
8	**BN 71 … BN 132**	
2/4	**BN 63 … BN 132**	Δ / YY (Dahlander)
2/6	**BN 71 … BN 132**	Y / Y (Two windings)
2/8	**BN 71 … BN 132**	
2/12	**BN 80 … BN 132**	
4/6	**BN 71 … BN 132**	
4/8	**BN 80 … BN 132**	Δ / YY (Dahlander)

(²) Motors with voltage in ratio 2 (ex. 230/460 - 60) will be equipped with a 9 pin terminal box with winding connection either Δ Δ/ Δ or YY / Y (except 6 pole BN 63 Δ / Y)

M4.2 Frequency

Rated output power BN / M for 60 Hz operation is shown in the following diagram.

(F 16)

		2P	4P	6P
		P_n [kW]		
BN 56A	**–**	–	0.06	–
BN 56B	**M0B**	–	0.10	–
BN 63A	**M05A**	0.21	0.14	0.10
BN 63B	**M05B**	0.30	0.21	0.14
BN 71A	**M05C**	0.45	0.30	0.21
BN 71B	**M1SD**	0.65	0.45	0.30
BN 80A	**M1LA**	0.90	0.65	0.45
BN 80B	**M2SA**	1.30	0.90	0.65
BN 90S	**M2SB**	–	1.30	0.90
BN 90SA	**M2SB**	1.8	–	–
BN 90L	**M3SA**	2.5	–	1.3
BN 90LA	**M3SA**	–	1.8	–
BN 100L	**M3LA**	3.5	–	–
BN 100LA	**M3LA**	–	2.5	1.8
BN 100LB	**M3LB**	4.7	3.5	2.2

		2P	4P	6P
		P_n [kW]		
BN 112M	**M3LB**	4.7	4.7	2.5
	M3LC	–	4.7	2.5
BN 132S	**M4SA**	–	6.5	3.5
BN 132SA	**M4SA**	6.3	–	–
BN 132SB	**M4SB**	8.7	–	–
BN 132M	**M4LA**	11	–	–
BN 132MA	**M4LA**	–	8.7	4.6
BN 132MB	**M4LB**	–	11	6.5
BN 160MR	**M4LC**	12.5	12.5	–
BN 160MB	**M5SB**	17.5	–	–
BN 160M	**M5SA**	–	–	8.6
BN 160L	**M5S**	21.5	17.5	12.6
BN 180M	**M5LA**	24.5	21.5	–
BN 180L	**–**	–	25.3	17.5
BN 200L	**–**	34	34	22

Double speed BN / M motors supplied at 60 Hz will have an increase of nominal power, referred to 50 Hz, equal to 15%.
If a nominal power rating, equal to the normalised nominal power rating at 50 Hz, was requested to be on a nameplate of a motor meant to be voltage supplied at 60 Hz, the PN option shall be specified on the motor designation.
Motors normally designed for a 50 Hz frequency may be used on a 60 Hz operating grid, but the related data shall be updated according to the following table.

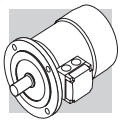

(F 17)

50 Hz	**60 Hz**			
V - 50 Hz	**V** - 60 Hz	**Pn** - 60 Hz	$\mathbf{M_n}$, $\mathbf{M_a/M_n}$ - 60 Hz	**n** [min^{-1}] - 60 Hz
230/400 Δ/Y	220 - 240 Δ	1	0.83	1.2
	380 - 415 Y			
400/690 Δ/Y	380 - 415 Δ			
230/400 Δ/Y	265 - 280 Δ	1.15	1	1.2
	440 - 480 Y			
400/690 Δ/Y	440 - 480 Δ			

M4.3 Ambient temperature

Catalogue rating values are calculated for 50 Hz operation and for standard ambient conditions (temperature 40 °C; elevation <1000 m a.s.l.) as per the CEI EN 60034-1 Standards.
The motors can be used within the 40 - 60 °C temperature range with rated power output adjusted by factors given in the following charts.

(F 18)

Ambient temperature (°C)	40°	45°	50°	55°	60°
Permitted power as a % of rated power	100%	95%	90%	85%	80%

Should a derating factor higher than 15% apply please consult factory.

M4.4 Insulation class

CL F

Bonfiglioli motors use class **F** insulating materials (enamelled wire, insulators, impregnation resins) as compare to the standard motor.

CL H

Motors manufactured in insulation class **H** are available at request.
In standard motors, stator windings over temperature normally stays below the 80 K limit corresponding to class B over temperature.
A careful selection of insulating components makes the motors compatible with tropical climates and normal vibration.
For applications involving the presence of aggressive chemicals or high humidity, contact Bonfiglioli Engineering for assistance with product selection.
Not available for motors in compliance with CSA e UL standards (CUS option).

(F 19)

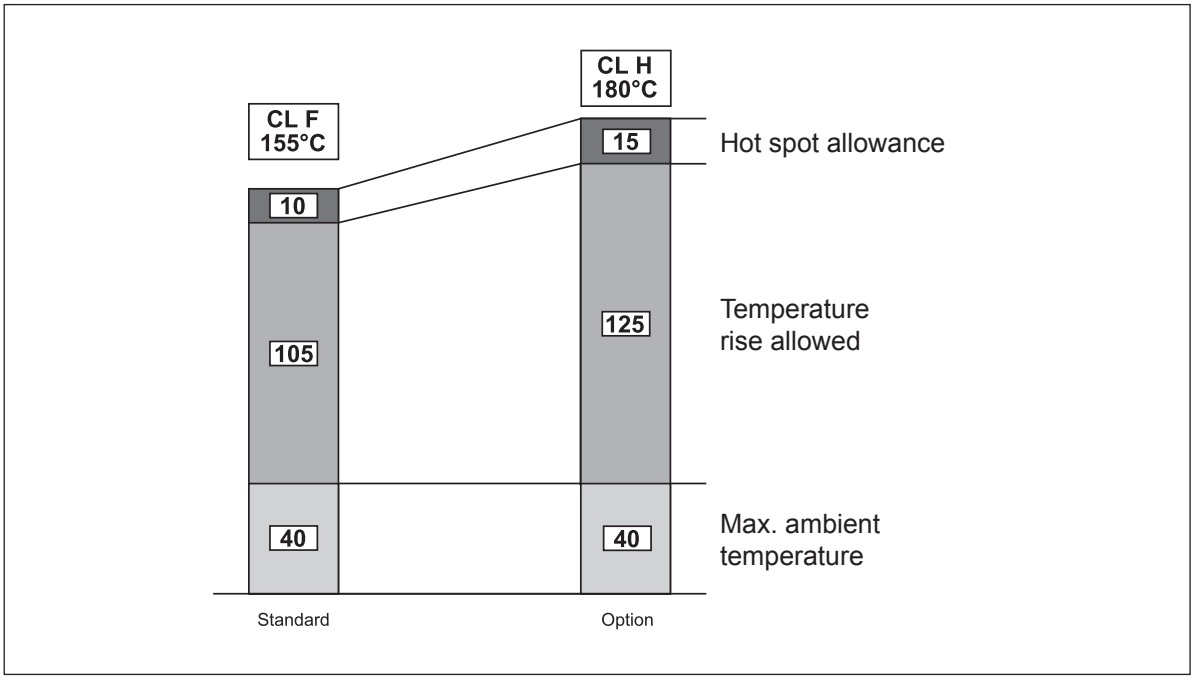

M4.5 Type of duty

Unless otherwise specified, catalogue motor power refers to continuous duty S1.
Any operating conditions other than S1 duty must be identified in accordance with duty cycle definitions laid down in standards CEI EN 60034-1.
For duty cycles S2 and S3, the power increase co-efficient reported in the following table may be used. Please note that the table provided below applies to single-speed motors.
As an alternative to S1 continuous duty, one of the following values can be specified at the product configuration stage: S2, S3 or S9. The motor nameplate will be marked with an increased power rating to suit the type of duty, and with specific electrical data and a duty type of S2-30 min, S3-70% or S9 respectively.
For further details, contact Bonfiglioli's Technical Service.
Please contact Bonfiglioli Engineering for the power increase coefficients applicable to switch-pole motors.

(F 20)

	Duty						
	S2			**S3 ***			**S4 - S9**
	Cycle duration (min)			Cyclic duration factor (I)			
	10	**30 (*)**	**60**	**25%**	**40%**	**70% (*)**	Consult factory
f_m	1.35	1.15	1.05	1.25	1.15	1.1	

* Cycle duration must, in any event, be equal to or less than 10 minutes; if this time is exceeded, please contact our Technical Service.
(*) Default values from options.

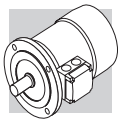

M4.5.1 Cyclic duration factor:

$$I = \frac{t_f}{t_f + t_r} \cdot 100 \qquad (23)$$

t_f = work time under constant load
t_r = rest time

M4.5.2 Limited duration duty S2

This type of duty is characterized by operation at constant load for a limited time, which is shorter than the time required to reach thermal equilibrium, followed by a rest period of sufficient duration to restore ambient temperature in the motor.

M4.5.3 Periodical intermittent duty S3:

This type of duty is characterized by a sequence of identical operation cycles, each including a constant load operation period and a rest period.
For this type of duty, the starting current does not significantly influence overtemperature.

M4.6 Inverter-controlled motors

The electric motors of series BN and M may be used in combination with PWM inverters with rated voltage at transformer input up to 500 V.Standard motors use a phase insulating system with separators, class 2 enamelled wire and class H impregnation resins (1600V peak-to-peak voltage pulse capacity and rise edge t_s > 0.1µs at motor terminals). Table (F30) shows the typical torque/speed curves referred to S1 duty for motors with base frequency f_b = 50 Hz.
Because ventilation is somewhat impaired in operation at lower frequencies (about 30 Hz), standard motors with incorporated fan (IC411) require adequate torque derating or - alternately - the addition of a separate supply fan cooling.
Above base frequency, upon reaching the maximum output voltage of the inverter, the motor enters a steady-power field of operation, and shaft torque drops with ratio (f/f_b).
As motor maximum torque decreases with $(f/f_b)^2$, the allowed overloading must be reduced progressively.

(F 21)

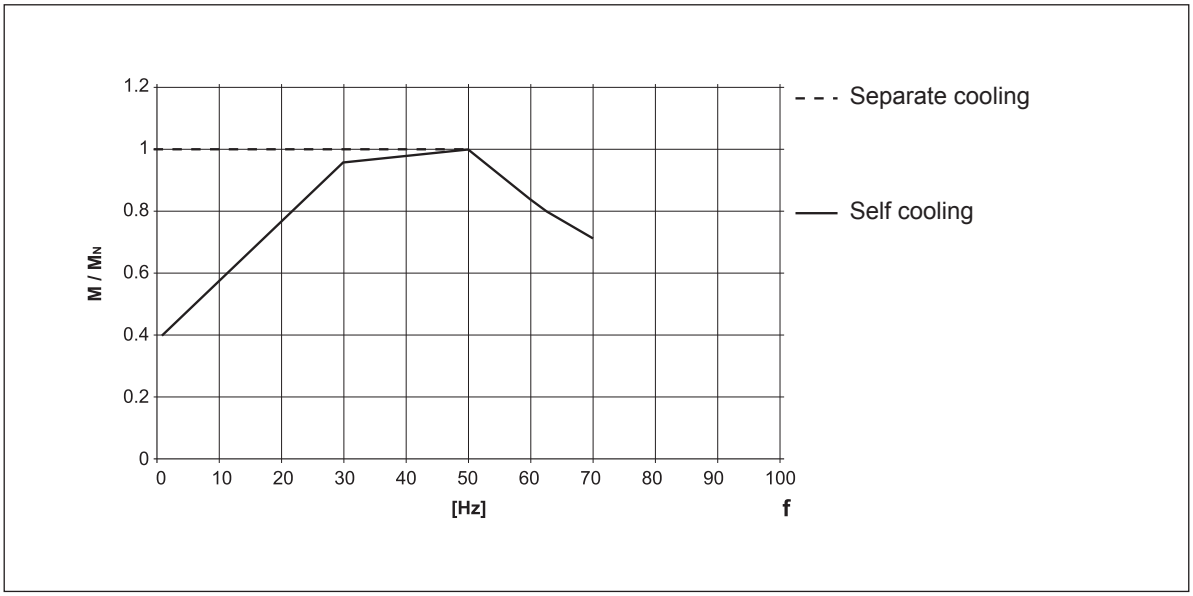

Table (F22) reports the mechanical limit speed for motor operation above rated frequency:

(F 22)

		n [min^{-1}]		
		2p	**4p**	**6p**
≤ BN 112	**M05…M3**	5200	4000	3000
BN 132...BN 200L	**M4, M5**	4500	4000	3000

Above rated speed, motors generate increased mechanical vibration and fan noise. Class B rotor balancing is highly recommended in these applications. Installing a separate supply fan cooling may also be advisable.

Remote-controlled fan and brake (if fitted) must always be connected direct to mains power supply.

M4.7 Permissible starts per hour, Z

The rating charts of brakemotors lend the permitted number of starts Z_0, based on 50% intermittence and for unloaded operation.
The catalogue value represents the maximum number of starts per hour for the motor without exceeding the rated temperature for the insulation class F.
To give a practical example for an application characterized by inertia J_c, drawing power P_r and requiring mean torque at start-up M_L the actual number of starts per hour for the motor can be calculated approximately through the following equation:

$$Z = \frac{Z_0 \cdot K_c \cdot K_d}{K_J} \qquad (24)$$

where:

$K_J = \frac{J_m + J_c}{J_m}$	inertia factor
$K_c = \frac{M_a - M_L}{M_a}$	torque factor
$K_d =$	load factor see table (F23)

(F 23)

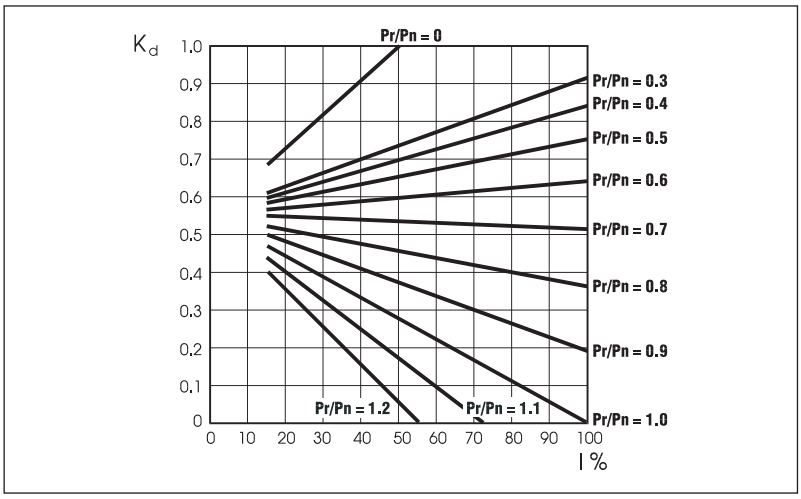

If actual starts per hour is within permitted value (Z) it may be worth checking that braking work is compatible with brake (thermal) capacity W_{max} also given in table (F30), (F40) and (F48) and dependent on the number of switches (c/h).

M5 ASYNCHRONOUS BRAKE MOTORS

M5.1 Operation

Versions with incorporated brake use spring-applied DC (FD, AFD option) or AC (FA options) brakes. All brakes are designed to provide fail-safe operation, meaning that they are applied by spring-action in the event of power failure.

(F 24)

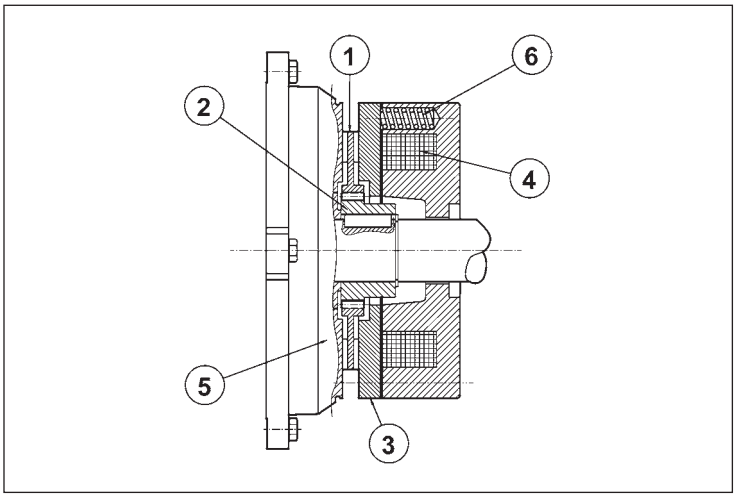

Key:
① brake disc
② disc carrier
③ pressure plate
④ brake coil
⑤ motor rear shield
⑥ brake springs

When voltage is interrupted, pressure springs push the armature plate against the brake disc. The disc becomes trapped between the armature plate and motor shield and stops the shaft from rotation.
When the coil is energized, a magnetic field strong enough to overcome spring action attracts the armature plate, so that the brake disc – which is integral with the motor shaft – is released.

M5.2 Most significant features

- High braking torques (normally $M_b \approx 2$ Mn), braking torque adjustment.
- Steel brake disc with double friction lining (low-wear, asbestos-free lining).
- Hexagonal seat on motor shaft fan end (N.D.E.) for manual rotation (not compatible with options PS, RC, TC, U1, U2, EN1, EN2, EN3, EN4, EN5, EN6).
- Manual release lever (options **R** and **RM** for BN/M_FD; option **R** for BN/M_FA).
- Manual mechanical release (option **R** for BN/M_AFD).
- Corrosion-proof treatment on all brake surfaces.
- Insulation class F.

M6 DC BRAKE MOTORS TYPE BN_FD and M_FD

Frame sizes: BN 63 … BN 200L / M05 ... M5

(F 25)

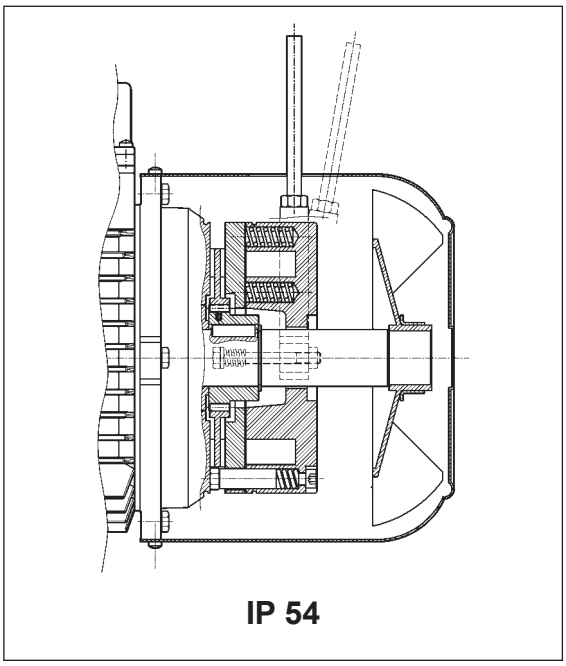

IP 54

(F 26)

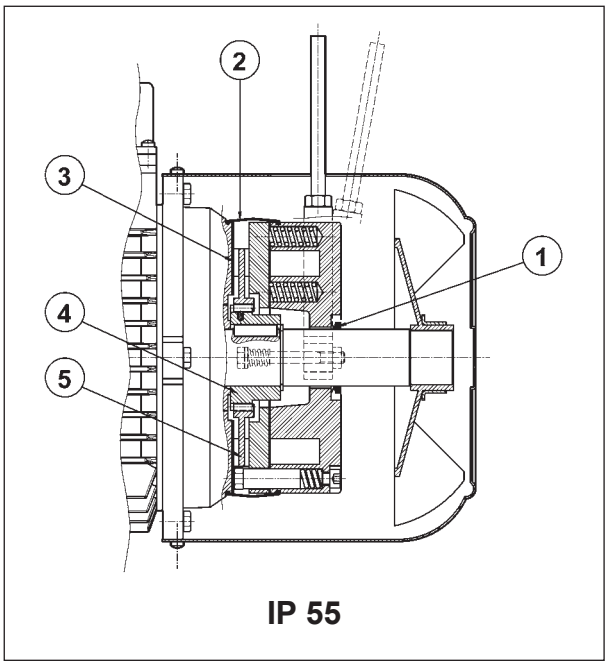

IP 55

Direct current toroidal-coil electromagnetic brake bolted onto motor shield. Preloading springs provide axial positioning of magnet body.
Brake disc slides axially on steel hub shrunk onto motor shaft with anti-vibration device.
Brake torque factory setting is indicated in the corresponding motor rating charts. Braking torque may be modified by changing the type and/or number of springs.
At request, motors may be equipped with manual release lever with automatic return (**R**) or system for holding brake in the released position (**RM**).
See variant at paragraph “BRAKE RELEASE SYSTEMS” for available release lever locations.
FD brakes ensure excellent dynamic performance with low noise. DC brake operating characteristics may be optimized to meet application requirements by choosing from the various rectifier/power supply and wiring connection options available.
For applications involving lifting and/or high hourly energy dissipation, contact Bonfiglioli’s Technical Service.

M6.1 Degree of protection

Standard protection class is IP54.
Brake motor FD is also available in protection class **IP55**, which mandates the following variants:

① V-ring at N.D.E. of motor shaft
② dust and water-proof rubber boot
③ stainless steel ring placed between motor shieldand brake disc
④ stainless steel hub
⑤ stainless steel brake disc

M6.2 FD brake power supply

A rectifier accommodated inside the terminal box feeds the DC brake coil. Wiring connection across rectifier and brake coil is performed at the factory.
On all single-pole motors, rectifier is connected to the motor terminal board.
Rectifier standard power supply voltage VB is as indicated in the following table, regardless of mains frequency:

(F 27)

2, 4, 6 P					**1 speed**
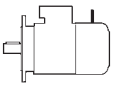		**BN_FD / M_FD** V_{mot} ± 10% 3 ~	**BN_FD / M_FD** V_B ± 10% 1 ~	brake connected to terminal board power supply	separate power supply
BN 63…BN 132	**M05...M4LB**	230/400 V – 50 Hz	230 V	standard	specify **V_B SA** o **V_B SD**
BN 160…BN 200	**M4LC...M5**	400/690 V – 50 Hz	400 V	standard	specify **V_B SA** o **V_B SD**

Switch-pole motors feature a separate power supply line for the brake with rectifier input voltage V_B as indicated in the table below:

(F 28)

2/4, 2/6, 2/8, 2/12, 4/6, 4/8 P					**2 speed**
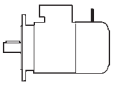		**BN_FD / M_FD** V_{mot} ± 10% 3 ~	**BN_FD / M_FD** V_B ± 10% 1 ~	brake connected to terminal board power supply	separate power supply
BN 63…BN 132	**M05...M4LB**	400 V – 50 Hz	230 V	⛔	specify **V_B SA** o **V_B SD**

The diode half-wave rectifier (VDC ≈ 0,45 x VAC) is available in versions **NB, SB, NBR** e **SBR**, as detailed in the table below:

(F 29)

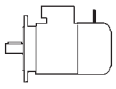		brake	standard	at request
BN 63	**M05**	**FD 02**	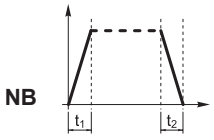	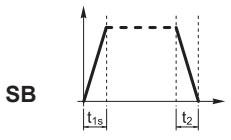
BN 71	**M1**	**FD 03**		
		FD 53		
BN 80	**M2**	**FD 04**		
BN 90S	**—**	**FD 14**		
BN 90L	**—**	**FD 05**		
BN 100	**M3**	**FD 15**		
—		**FD 55**	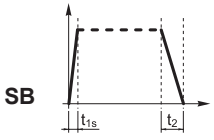	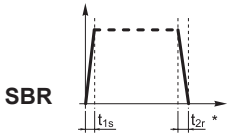
BN 112	**—**	**FD 06S**		
BN 132...160MR	**M4**	**FD 56**		
BN 160L - BN 180M	**M5**	**FD 06**		
BN 180L - NM 200L	**—**	**FD 07**		

(*) $t_{2c} < t_{2r} < t_2$

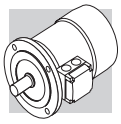

Rectifier **SB** with electronic energizing control over-energizes the electromagnet upon power-up to cut brake release response time and then switches to normal half-wave operation once the brake has been released.

Use of the **SB** rectifier is mandatory in the event of:
- high number of operations per hour
- reduced brake release response time
- brake is exposed to extreme thermal stress

Rectifiers **NBR** or **SBR** are available for applications requiring quick brake intervention (braking condition reinstatement) response.
These rectifiers complement the **NB** and **SB** types as their electronic circuit incorporates a static switch that de-energizes the brake quickly in the event voltage is missing.
This arrangement ensures short brake release response time with no need for additional external wiring and contacts.
Optimum performance of rectifiers **NBR** and **SBR** is achieved with separate brake power supply.
Versions available: 230Vac ±10%, 400Vac ± 10%, 50/60 Hz (with power supply); 100Vdc ±10%, 180Vdc ± 10% (with SD option).

M6.3 FD brake technical specifications

The table below reports the technical specifications of DC brakes FD.

(F 30)

Brake	Brake torque M_b [Nm] springs			Release		Braking		W_{max} per brake operation [J]			W	P
				t_1	$t_{1\,s}$	t_2	t_{2c}					
	6	4	2	[ms]	[ms]	[ms]	[ms]	10 s/h	100 s/h	1000 s/h	[MJ]	[W]
FD02	–	3.5	1.75	30	15	80	9	4500	1400	180	15	17
FD03	5	3.5	1.75	50	20	100	12	7000	1900	230	25	24
FD53	7.5	5	2.5	60	30	100	12					
FD04	15	10	5	80	35	140	15	10000	3100	350	30	33
FD14												
FD05	40	26	13	130	65	170	20	18000	4500	500	50	45
FD15	40	26	13	130	65	170	20					
FD55	55	37	18	–	65	170	20					
FD06S	60	40	20	–	80	220	25	20000	4800	550	70	55
FD56	–	75	37	–	90	250	20	29000	7400	800	80	65
FD06		100	50		100	250	20					
FD07	150	100	50	–	120	200	25	40000	9300	1000	130	65
FD08*	250	200	170	–	140	350	30	60000	14000	1500	230	100
FD09**	400	300	200	–	200	450	40	70000	15000	1700	230	120

* brake torque values obtained with 9, 7 and 6 springs, respectively

** brake torque values obtained with 12, 9 and 6 springs, respectively

t_1 = brake release time with half-wave rectifier
t_{1s} = brake release time with over-energizing rectifier
t_2 = brake engagement time with AC line interruption and separate power supply
t_{2c} = brake engagement time with AC and DC line interruption – Values for t1, t1s, t2, t2c indicated in the tab. (F30) are referred to brake set at maximum torque, medium air gap and rated voltage
W_{max} = max energy per brake operation
W = braking energy between two successive air gap adjustments
P_b = brake power absorption at 20 °C
M_b = static braking torque (±15%)
s/h = starts per hour

The brake pad wear depends on the operating/ambient conditions (temperature, humidity, angular speed, specifica pressure); Therefore the declared wear rate must be considered as indicative.

M6.4 FD brake connections

On standard single-pole motors, the rectifier is connected to the motor terminal board at the factory. For switch-pole motors and where a separate brake power supply is required, connection to rectifier must comply with brake voltage VB stated in motor name plate.
Because the load is of the inductive type, brake control and DC line interruption must use contacts from the usage class AC-3 to IEC 60947-4-1.

Table (F31) – Brake power supply from motor terminals and AC line interruption
Delayed stop time t_2 and function of motor time constants.
Mandatory when soft-start/stops are required.
Table (F32) – Brake coil with separate power supply and AC line interruption
Normal stop time independent of motor.
Achieved stop times t_2 are indicated in the table (F30).
Table (F33) – Brake coil power supply from motor terminals and AC/DC line interruption.
Quick stop with operation times t_{2c} as per table (F30).
Table (F34) – Brake coil with separate power supply and AC/DC line interruption.
Stop time decreases by values t_{2c} indicated in the table (F30).

The brake may be voltage supplied directly from the motor terminal box (from tab. F31 to tab. F34) only if the nominal voltage of the brake is the same as the smaller voltage of the motor.

(F 31)

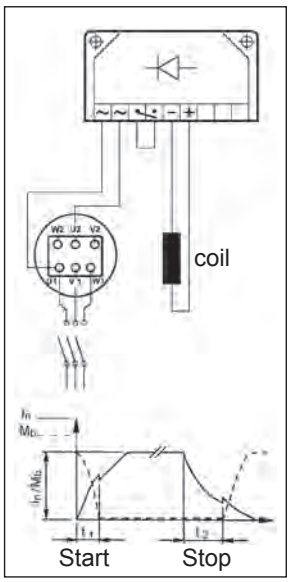

(F 32)

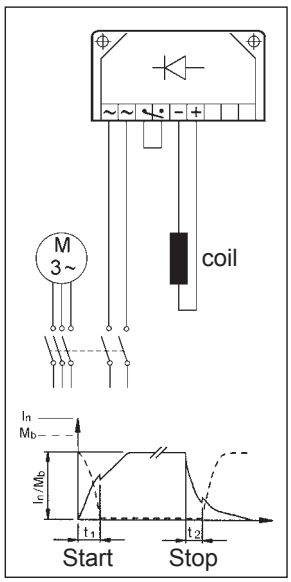

(F 33)

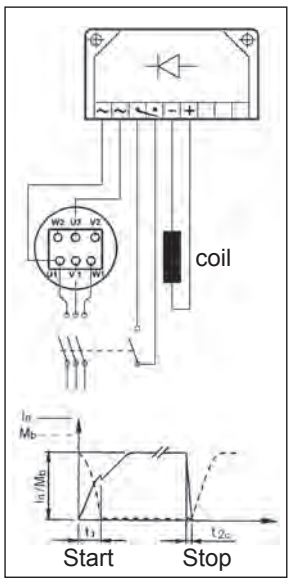

(F 34)

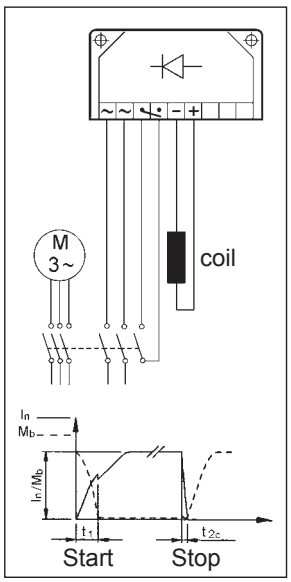

M7 DC BRAKE MOTORS TYPE BN_AFD and M_AFD

Frame sizes: BN 63 … BN 200L / M05 ... M5

(F 35)

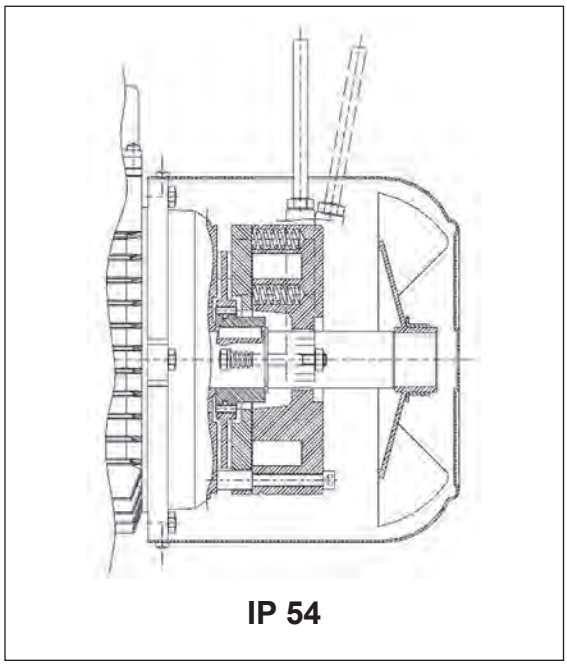

IP 54

(F 36)

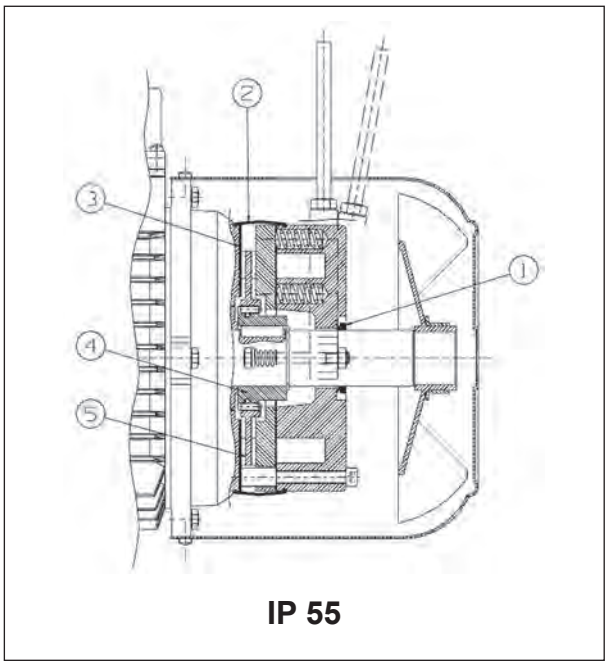

IP 55

Maintenance free up to the maximum permissible wear of brake disc. The air gap of AFD brakes is preset and it does not have to be set

Direct current toroidal-coil electromagnetic brake bolted onto motor shield.
Brake disc slides axially on steel hub shrunk onto motor shaft with anti-vibration device.
Brake torque factory setting is indicated in the corresponding motor rating charts. Braking torque may be modified by changing the type and/or number of springs.
At request, motors may be equipped with manual release lever with automatic return (**R**) see variant at paragraph “BRAKE RELEASE SYSTEMS” for available release lever locations.
AFD brakes ensure excellent dynamic performance with low noise. DC brake operating characteristics may be optimized to meet application requirements by choosing from the various rectifier/power supply and wiring connection options available.
The AFD brake is recommended for applications in which it is used as a holding brake.
For applications involving lifting and/or high hourly energy dissipation, contact Bonfiglioli’s Technical Service.

M7.1 Degree of protection

Standard protection class is IP54.
Brake motor AFD is also available in protection class **IP55**, which mandates the following variants:

① V-ring at N.D.E. of motor shaft
② dust and water-proof rubber boot
③ stainless steel ring placed between motor shieldand brake disc
④ stainless steel hub
⑤ stainless steel brake disc

M7.2 AFD brake power supply

A rectifier accommodated inside the terminal box feeds the DC brake coil. Wiring connection across rectifier and brake coil is performed at the factory.
On all single-pole motors, rectifier is connected to the motor terminal board.
Rectifier standard power supply voltage VB is as indicated in the following table, regardless of mains frequency:

(F 37)

2, 4, 6 P					**1 speed**
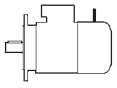		**BN_AFD / M_AFD** V_{mot} ± 10% 3 ~	V_B ± 10% 1 ~	brake connected to terminal board power supply	separate power supply
BN 63…BN 132	**M05...M4LB**	230/400 V – 50 Hz	230 V	standard	specify **V_B SA** o **V_B SD**
BN 160MR	**M4LC**	400/690 V – 50 Hz	400 V	standard	specify **V_B SA** o **V_B SD**

Switch-pole motors feature a separate power supply line for the brake with rectifier input voltage V_B as indicated in the table below:

(F 38)

2/4, 2/6, 2/8, 2/12, 4/6, 4/8 P					**2 speed**
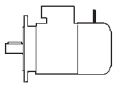		**BN_AFD / M_AFD** V_{mot} ± 10% 3 ~	V_B ± 10% 1 ~	brake connected to terminal board power supply	separate power supply
BN 63…BN 132	**M05...M4LB**	400 V – 50 Hz	230 V	⛔	specify **V_B SA** o **V_B SD**

The diode half-wave rectifier (VDC ≈ 0,45 x VAC) is available in versions **SB** and **SBR**, as detailed in the table below:

(F 39)

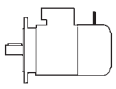		brake	standard	at request
BN 63	**M05**	**AFD 02**		
BN 71	**M1**	**AFD 03**		
BN 80	**M2**	**AFD 04**		
BN 90S	**—**	**AFD 14**		
BN 90L	**—**	**AFD 05**		
BN 100	**M3**	**AFD 15**		
BN 112	**—**	**AFD 06S**		
BN 132...160MR	**M4**	**AFD 06**		
		AFD 07		

SB 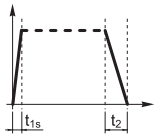

SBR 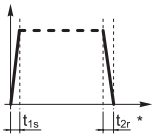

(*) $t_{2c} < t_{2r} < t_2$

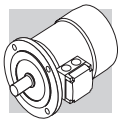

Rectifier **SB** with electronic energizing control over-energizes the electromagnet upon power-up to cut brake release response time and then switches to normal half-wave operation once the brake has been released.

Use of the **SB** rectifier is mandatory in the event of:
- high number of operations per hour
- reduced brake release response time
- brake is exposed to extreme thermal stress

Rectifiers **SBR** are available for applications requiring quick brake intervention (braking condition reinstatement) response.
These rectifiers complement the **SB** types as their electronic circuit incorporates a static switch that de-energizes the brake quickly in the event voltage is missing.
This arrangement ensures short brake release response time with no need for additional external wiring and contacts.
Optimum performance of rectifiers **SBR** is achieved with separate brake power supply.
Versions available: 230 V ac ±10%, 400 V ac ± 10%, 50/60 Hz (with power supply); 100 V dc ±10%, 180 V dc ± 10% (with SD option).

M7.3 AFD brake technical specifications

The table below reports the technical specifications of DC brakes AFD.

(F 40)

Brake	Brake torque M_b [Nm] springs			Air gap		Release	Braking		W_{max} per brake operation [J]			W	P
				tin	tmax	$t_{1\,s}$	t_2	t_{2c}					
	6	4	2	(± 0.1 mm)		[ms]	[ms]	[ms]	10 s/h	100 s/h	1000 s/h	[MJ]	[W]
AFD 02	—	3.5	1.8	0.3	0.7	20	110	10	4500	1400	160	40	15
AFD 03	7.5	5	2.5	0.3	0.7	35	140	15	7000	1900	210	60	21
AFD 04 / **AFD 14**	15	10	5	0.4	0.8	55	180	15	11000	3100	350	75	27
AFD 05 / **AFD 15**	40	26	13	0.4	0.8	85	240	25	18000	4500	500	125	37
AFD 06S	60	40	20	0.45	0.9	110	280	30	25000	6300	700	175	47
AFD 06	100	75(*) / 62(*)	37	0.45	0.9	130	330	30	29000	7400	800	200	50
AFD 07	150	100	50	0.45	0.95	170	350	30	40000	9300	1000	320	55

(*) depending on the type of springs

tin = air gap with new brake disk
tmax = maximum air gap which is necessary to replace the brake disc
t_{1s} = brake release time with over-energizing rectifier
t_2 = brake engagement time with AC line interruption and separate power supply
t_{2c} = brake engagement time with AC and DC line interruption – Values for t1s, t2, t2c indicated in the table are referred to brake set at maximum torque, medium air gap and rated voltage
W_{max} = max energy per brake operation
W = dissipatable braking energy before replacement of brake disc
P_b = brake power absorption at 20 °C
M_b = static braking torque (±15%)
s/h = starts per hour

The brake pad wear depends on the operating/ambient conditions (temperature, humidity, angular speed, specifica pressure); Therefore the declared wear rate must be considered as indicative.

M7.4 AFD brake connections

On standard single-pole motors, the rectifier is connected to the motor terminal board at the factory. For switch-pole motors and where a separate brake power supply is required, connection to rectifier must comply with brake voltage VB stated in motor name plate.
Because the load is of the inductive type, brake control and DC line interruption must use contacts from the usage class AC-3 to IEC 60947-4-1.

Table (F41) – Brake power supply from motor terminals and AC line interruption
Delayed stop time t_2 and function of motor time constants.
Mandatory when soft-start/stops are required.
Table (F42) – Brake coil with separate power supply and AC line interruption
Normal stop time independent of motor.
Achieved stop times t_2 are indicated in the table (F40).
Table (F43) – Brake coil power supply from motor terminals and AC/DC line interruption.
Quick stop with operation times t_{2c} as per table (F40).
Table (F44) – Brake coil with separate power supply and AC/DC line interruption.
Stop time decreases by values t_{2c} indicated in the table (F40).

The brake may be voltage supplied directly from the motor terminal box (from tab. F41 to tab. F44) only if the nominal voltage of the brake is the same as the smaller voltage of the motor.

(F 41)

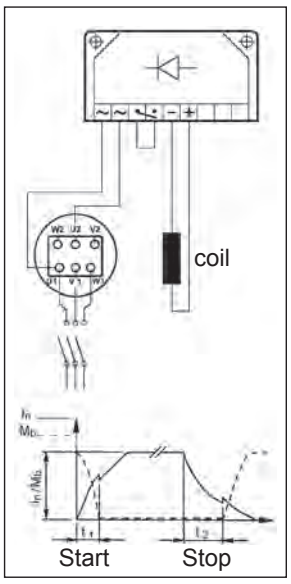

(F 42)

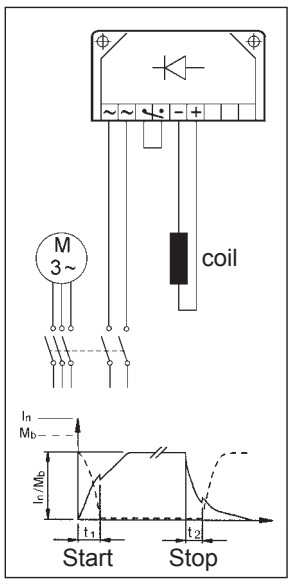

(F 43)

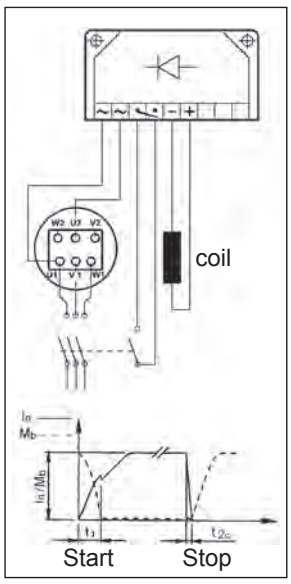

(F 44)

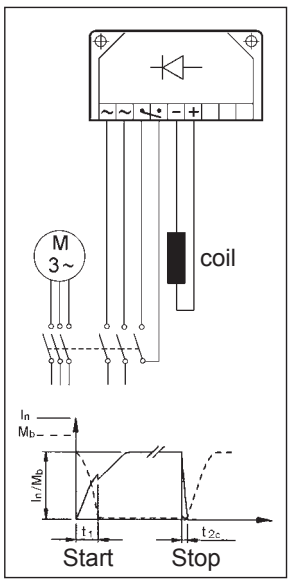

M8 AC BRAKE MOTORS TYPE BN_FA and M_FA

Frame sizes: BN 63 … BN 180M / M05 ... M5

(F 45)

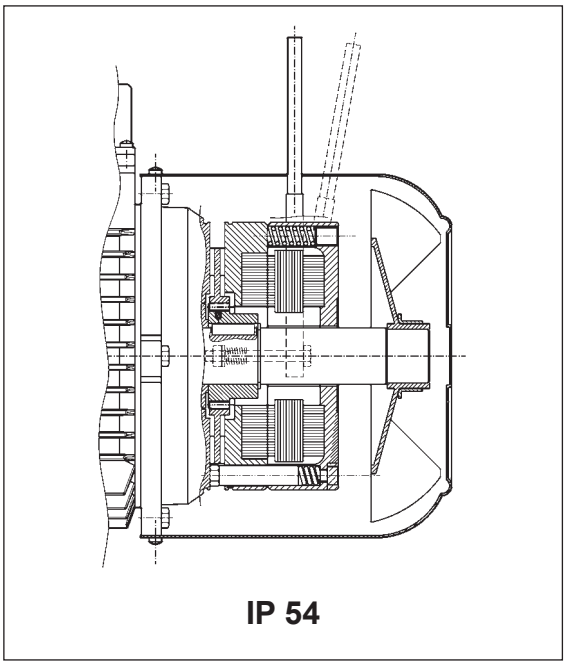

IP 54

(F 46)

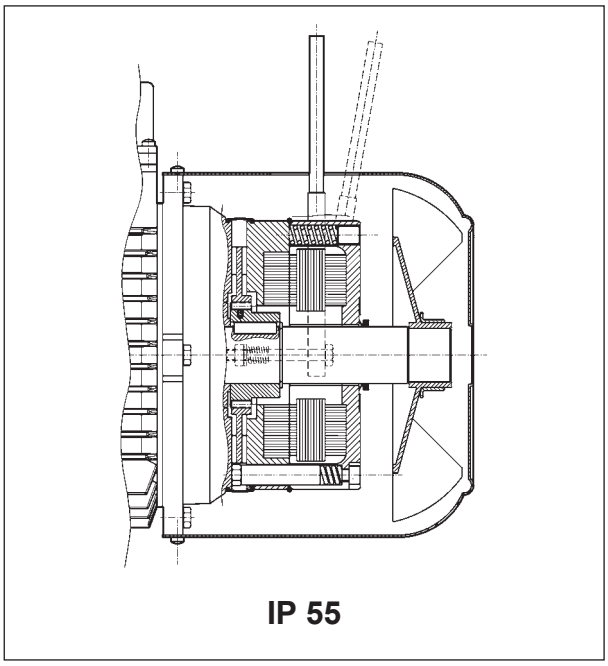

IP 55

Electromagnetic brake operates from three-phase **alternated current** power supply and is bolted onto conveyor shield. Preloading springs provide axial positioning of magnet body.
Steel brake disc slides axially on steel hub shrunk onto motor shaft with anti-vibration device.
Brake torque factory setting is indicated in the corresponding motor rating charts.
Spring preloading screws provide stepless braking torque adjustment.
Torque adjustment range is 30% $M_{bMAX} < M_b < M_{bMAX}$ (where M_{bMAX} is maximum braking torque as shown in tab. (F48).
Thanks to their high dynamic characteristics, FA brakes are ideal for heavy-duty applications as well as applications requiring frequent stop/starts and very fast response time.
Motors may be equipped with manual release lever with automatic return (**R**) at request. See variant at paragraph “BRAKE RELEASE SYSTEMS” for available release lever locations.
For applications involving lifting and/or high hourly energy dissipation, contact Bonfiglioli’s Technical Service.

M8.1 Degree of protection

Standard protection class is IP54.
Brake motor BN_FA is also available in protection class **IP55**, which mandates the following variants:

- V-ring at N.D.E. of motor shaft
- rubber protection sleeve
- O-ring

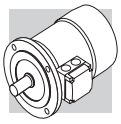

M8.2 FA brake power supply

In single speed motors, power supply is brought to the brake coil direct from the motor terminal box. As a result, brake voltage and motor voltage are the same. In this case, brake voltage indication may be omitted in the designation.
Switch-pole motors and motors with separate brake power supply feature an auxiliary terminal board with 6 terminals for connection to brake line. In both cases, brake voltage indication in the designation is mandatory.
The following table reports standard AC brake power supply ratings for single- and switch-pole motors:

(F 47)

	BN 63…BN 132	BN 160…BN 180
single-pole motor	**M05...M4LB**	**M4LC...M5**
	230Δ / 400Y V ±10% – 50 Hz	400Δ/ 690Y V ±10% – 50 Hz
	265Δ / 460Y ±10% - 60 Hz	460Y – 60 Hz

	BN 63…BN 132
switch-pole motors (separate power supply line)	**M05...M4**
	230Δ / 400Y V ±10% – 50 Hz
	460Y - 60 Hz

Unless otherwise specified, standard brake power supply is 230Δ /400Y V - 50 Hz.

Special voltages in the 24…690 V, 50-60 Hz range are available at request.

M8.3 Technical specifications of FA brakes

(F 48)

Brake	Brake torque M_b [Nm]	Release t_1 [ms]	Braking t_2 [ms]	W_{max} [J]			W [MJ]	P [VA]
				10 s/h	**100 s/h**	**1000 s/h**		
FA 02	3.5	4	20	4500	1400	180	15	60
FA 03	7.5	4	40	7000	1900	230	25	80
FA 04	15	6	60	10000	3100	350	30	110
FA 14								
FA 05	40	8	90	18000	4500	500	50	250
FA 15								
FA 06S	60	16	120	20000	4800	550	70	470
FA 06	75	16	140	29000	7400	800	80	550
FA 07	150	16	180	40000	9300	1000	130	600
FA 08	250	20	200	60000	14000	1500	230	1200

M_b = max static braking torque (±15%)
t_1 = brake release time
t_2 = brake engagement time
W_{max} = max energy per brake operation (brake thermal capacity)
W = braking energy between two successive air gap adjustments
P_b = power drawn by brake at 20° (50 Hz)
s/h = starts per hour

NOTE
Values t_1 and t_2 in the table refer to a brake set at rated torque, medium air gap and rated voltage.

The brake pad wear depends on the operating/ambient conditions (temperature, humidity, angular speed, specifica pressure); Therefore the declared wear rate must be considered as indicative.

M8.4 FA brake connections

The diagram (F49) shows the wiring when brake is connected directly to same power supply of the motor:

(F 49)

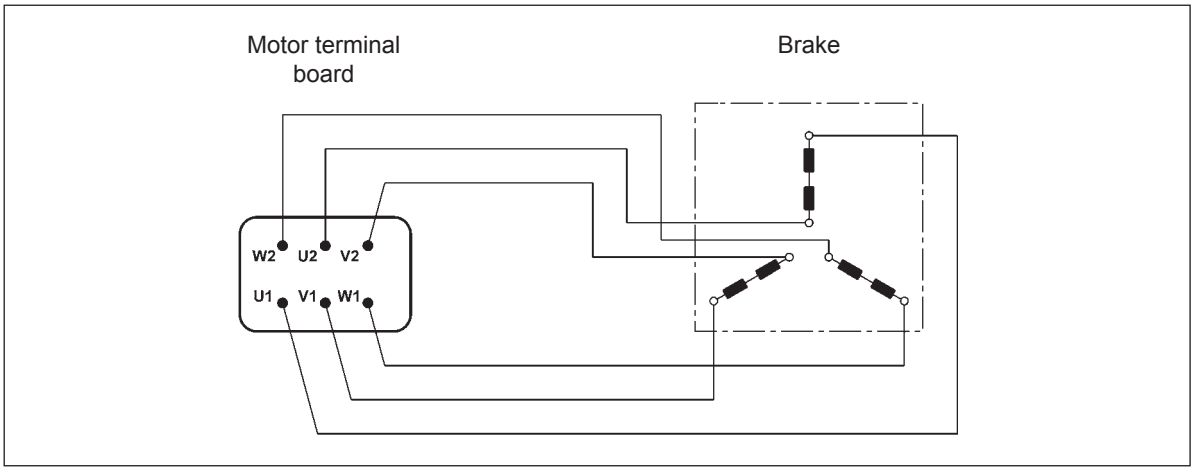

Switch-pole motors and, at request, single-pole motors with separate power supply are equipped with an auxiliary terminal board with 6 terminals for brake connection.
In this version, motors feature a larger terminal box. See diagram (F50):

(F 50)

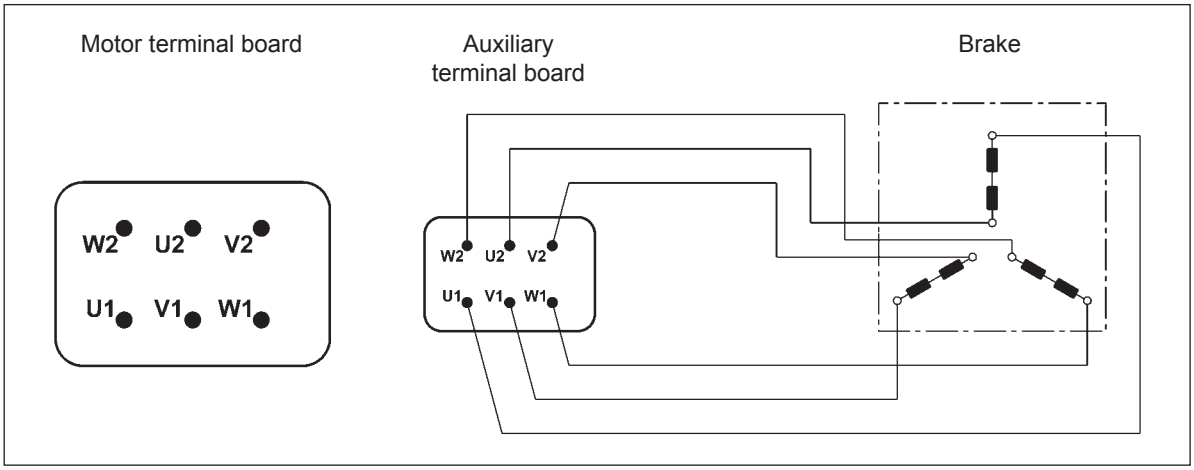

M9 BRAKE RELEASE SYSTEMS

Spring-applied brakes type FD, AFD and FA may be equipped with optional manual release devices. These are typically used for manually releasing the brake before servicing any machine or plant parts operated by the motor.

R

(F 51)

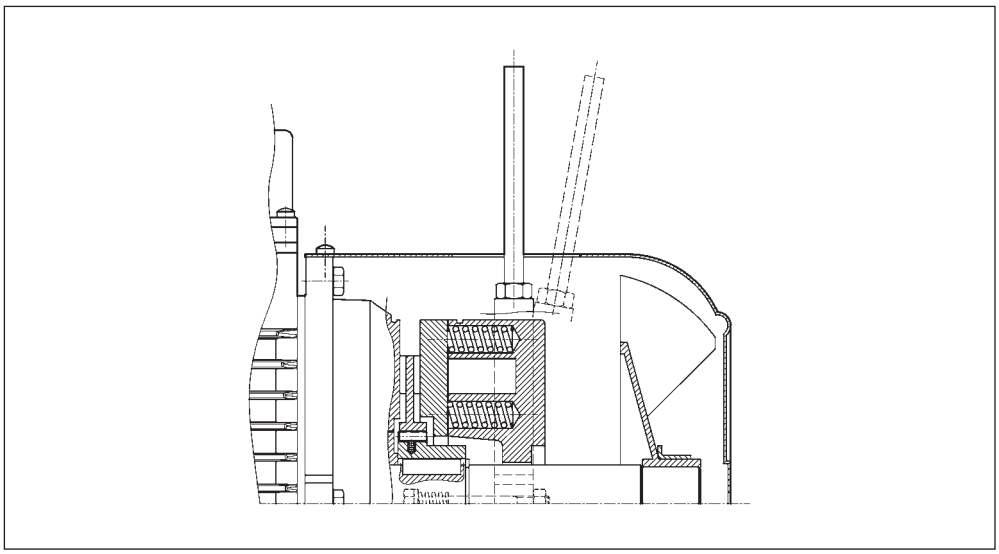

A return spring brings the release lever back in the original position.

RM

(F 52)

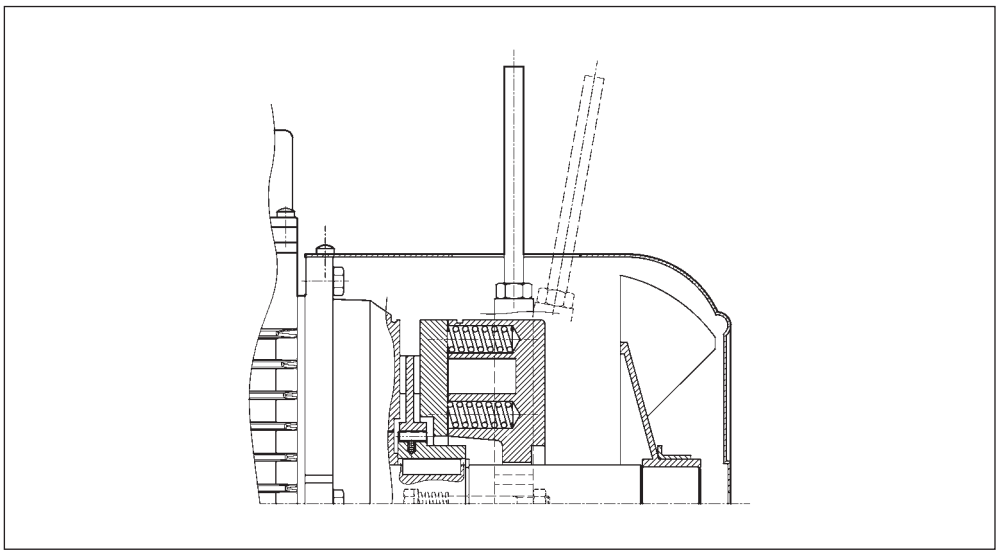

On motors type BN_FD, if the option RM is specified, the release device may be locked in the ”release” position by tightening the lever until its end becomes engaged with a brake housing projection. The availability for the various disengagement devices is charted here below:

(F 53)

	R	RM
BN_FD	**BN 63...BN 200**	**2p 63A2 ≤ H ≤ 132M2** **4p 63A4 ≤ H ≤ 132MA4** **6p 63A6 ≤ H ≤ 132MA6**
BN_AFD	**BN 63...BN 160MR**	⛔
M_FD	**M 05...M 5**	**M 05...M 4LA**
M_AFD	**M 05...M 4LC**	⛔
BN_FA	**BN 63...BN 180M**	⛔
M_FA	**M 05...M 5**	

M9.1 Release lever orientation

Unless otherwise specified, the release lever is located 90° away from the terminal box – identified by letters [**AB**] in the diagram below – in a clockwise direction on both options **R** and **RM**. Alternative lever positions [**AA**], [**AC**] and [**AD**] are also possible when the corresponding option is specified:

(F 54)

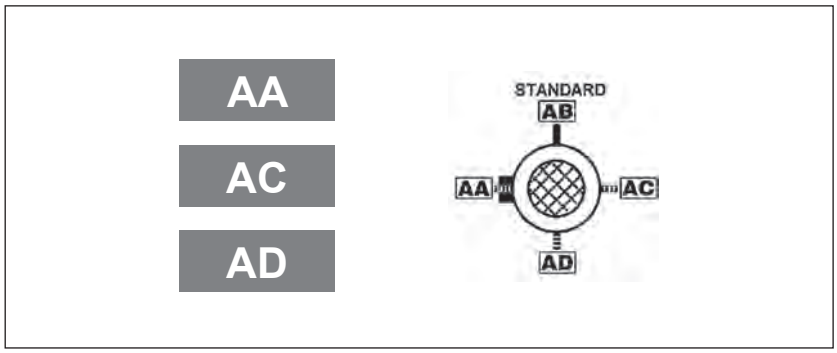

M9.2 Fly-wheel data (F1)

The table below shows values of weight and inertia of flywheel (option F1). Overall dimensions of motors remain unchanged.

(F 55)

Main data for flywheel of motore type: BN_FD, BN_AFD, M_FD, M_AFD			
		Fly-wheel weight [Kg]	**Fly-wheel inertia** [Kgm^2]
BN 63	**M05**	0.69	0.00063
BN 71	**M1**	1.13	0.00135
BN 80	**M2**	1.67	0.00270
BN 90 S - BN 90 L	**–**	2.51	0.00530
BN 100	**M3**	3.48	0.00840
BN 112	**–**	4.82	0.01483
BN 132 S - BN 132 M	**M4**	6.19	0.02580

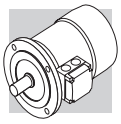

M10 OPTIONS

M10.1 Thermal protective devices

n addition to the standard protection provided by the magneto-thermal device, motors can be supplied with built-in thermal probes to protect the winding against overheating caused, by insufficient ventilation or by an intermittent duty.
This additional protection should always be specified for servoven- tilated motors (IC416).

M10.2 Capacitive filter

CF

An optional capacitive filter is available for DC brake motors type BN_FD and BN_AFD only. When the suitable capacitive filter is installed upstream of the rectifier (option CF), motors comply with the emission limits required by standard EN61000-6-3:2007“ Electromagnetic Compatibility – Generic Emission Standard – Part 6-3: Residential, commercial and light industrial environment”.

M10.3 Thermistors

E3

These are semi-conductors having rapid resistance variation when they are close to the rated switch off temperature (150 °C).
Variations of the R = f(T) characteristic are specified under DIN 44081, IEC 34-11 Standards.
Positive temperature coefficient thermistors are normally used (also known as PTC “cold conductor resistors”).
Thermistors cannot control relays directly and must be connected to a suitable disconnect device.
Thus protected, three PTCs connected in series are installed in the winding, the terminals of which are located on the auxiliary terminal-board.

K1

The design characteristics of this sub-group of PTC thermistors allow them to be used as positive temperature coefficient sensors with variable resistance.
Functioning temperature range: 0°C ... +260°C.
Thermistors cannot control relays directly and must be connected to a suitable disconnect device.
Terminals (polarised) for 1 x KTY 84-130 are provided on an auxiliary terminal strip.

M10.4 Bimetallic thermostates

D3

These types of protective devices house a bimetal disk. When the rated switch off temperature (150 °C) is reached, the disk switches the contacts from their initial rest position.
As temperature falls, the disk and the contacts automatically return to rest position.
Three bimetallic thermostates connected in series are usually employed, with normally closed contacts. The terminals are located on an auxiliary terminal-board.

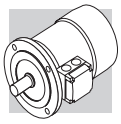

M10.5 Plug connector

CON

Three types of connectors (CON 1, CON 2, CON 3) are provided; they can be mounted in two different positions: right side of terminal box cover (C1D, C2D, C3D); left side of terminal box cover (C1S, C2S, C3S).
The option CON is applicable to single speed BN and M motors (2, 4, 6, 8 poles), and it is not applicable to switch-pole motors. More details about the motor sizes are available in the next table.
The connectors CON 1 / CON 2 are available for BN and M motors without brake and for BN and M brakemotors equipped with DC brake type FD or AFD, for the motor sizes listed below.
The male connector (with pins) is mounted on the motor, the female connector is not provided. With CON option, the winding connection is always Y.
With option U1 “forced ventilation”, the fan unit supply is available inside the separate terminal box fixed to fan cover.
With options EN1...EN6, the encoder connection is made by a cable not connected to the motor plug connector.
The CON option is not applicable to brakemotors equipped with AC brake type FA. The CON option is not available when at least one of the next options are selected: the U2, CUS, IC.

Specifications

(F 56)

Option	**CON 1**
Motor size	**BN63…BN112 / M05...M3**
Connector view	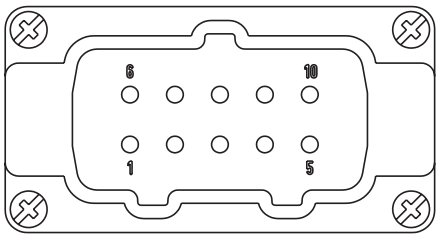
Type of connector	Harting Han 10ES
Housing	Han EMC 10B with 2 levers
Numbers of pins - nominal current	10 x 16A
Voltage	500 Vac
Contact connection	Screw terminals

(F 57)

Option	**CON 2**
Motor size	**BN63…BN132M / M05...M4L**
Connector view	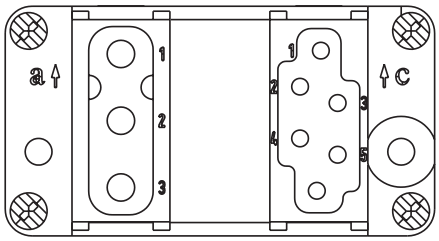
Type of connector	Harting Han Modular
Housing	Han EMC 10B with 2 levers
Module type	Module C + Empty module + Module E
Numbers of pins - nominal current	3 x 36A / 6 x 16A
Voltage	500 Vac
Contact connection	Crimping contacts

(F 58)

Option	**CON 3**
Motor size	**BN63…BN132M / M05...M4L**
Connector view	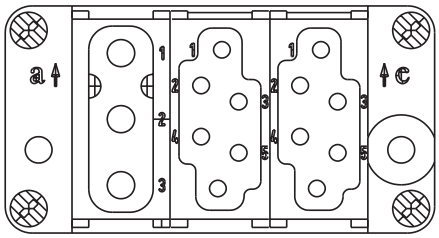
Type of connector	Harting Han Modular
Housing	Han EMC 10B with 2 levers
Module type	Module C + Module E + Module E
Numbers of pins - nominal current	3 x 36A / 6 + 6 x 16A
Voltage	500 Vac
Contact connection	Crimping contacts

(F 59)

Connector orientation
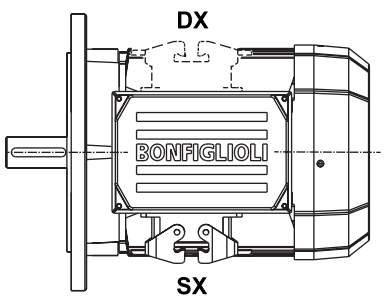

(F 60)

Motors without brake dimensions

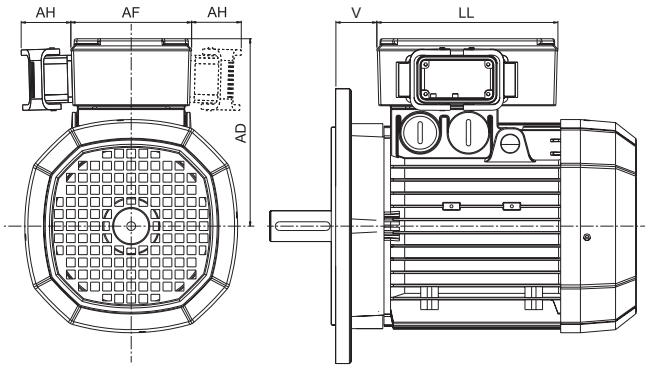

		AD (mm)	**AF** (mm)	**AH** (mm)	**LL** (mm)	**V**(*) (mm)
BN63	**M05**	136	110	45	165	4.5
BN71	**M1**	149	110	45	165	15.5
BN80	**M2**	160	110	45	165	16.5
BN90	**—**	162	110	45	165	31.5
BN100	**M3**	171	110	45	165	37.5
BN112	**—**	186	110	45	165	39
BN132	**M4**	210	140	45	188	45.5
BN160MR	**—**	210	140	45	188	161

(*) Dimension valid only for motors BN.

(F 61)

Motors with FD brake dimensions

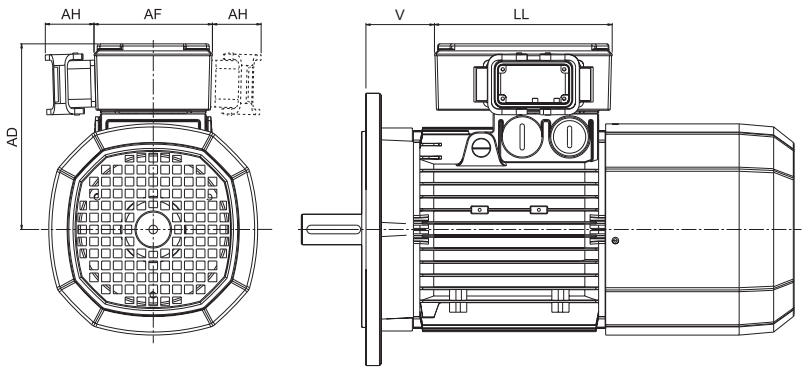

		AD (mm)	**AF** (mm)	**AH** (mm)	**LL** (mm)	**V**(*) (mm)
BN63	**M05**	136	110	45	165	4.5
BN71	**M1**	149	110	45	165	1.5
BN80	**M2**	160	110	45	165	18.5
BN90	**—**	162	110	45	165	39.5
BN100	**M3**	171	110	45	165	63.5
BN112	**—**	186	110	45	165	75
BN132	**M4**	210	140	45	188	122
BN160MR	**—**	210	140	45	188	161

(*) Dimension valid only for motors BN.

M10.6 Control of brake operation

MSW

The microswitch can be set in order to obtain from it a signal related to the attraction/release of anchor plate, or it can be set in order to give feedback when the air gap reaches the maximum value.
MSW option is available for brakes FD03...FD09 and AFD03...AFD07.
The microswitch is provided with three lead wires (NC, NO, COM). The next figure shown the main components of the brake equipped with microswitch.

(F 62)

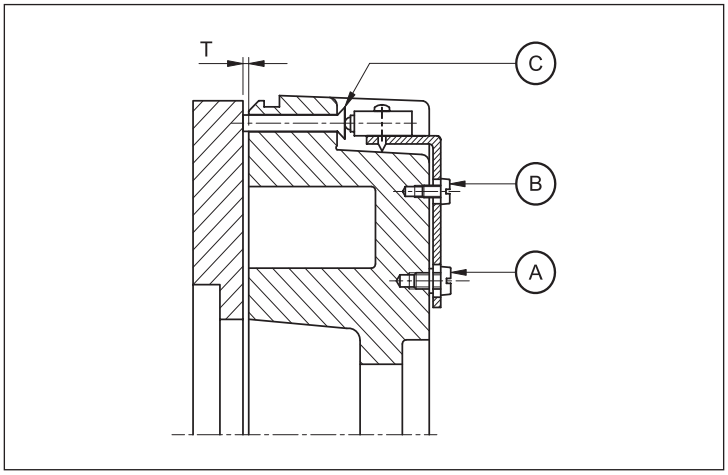

A: Plate fixing screws
B: Setting screws
C: Actuator control pin

M10.7 Additional cable entry for brakemotors

IC

The terminal box cover of brakemotors BN63...BN160MR / M05...M4 is provided with two additional cable entry M16 x 1.5 (one cable entry per side).
The terminal box cover of brakemotors BN160...BN200 / M5 is provided with an additional cable entry M16 x 1.5 next to the cable entry used for the brake.

M10.8 Anti-condensation heaters

H1 **NH1**

Where an application involves high humidity or extreme temperature fluctuation, motors may be equipped with an anti-condensate heater.
A single-phase power supply is available in the auxiliary terminal board inside the main terminal box.
Values for the absorbed power are listed here below:

(F 63)

		H1 1~ 230V ± 10% P [W]	NH1 1~ 115V ± 10% P [W]
BN 56...BN 80	**M0...M2**	10	10
BN 90...BN 160MR	**M3 - M4**	25	25
BN 160M...BN 180M	**M5**	50	50
BN 180L...BN 200L	**—**		

Warning!
Always remove power supply to the anti-condensante hea- ter before operating the motor.

M10.9 Tropicalization

TP

When option **TP** is specified, motor windings receive additional protection for operation in high humidity and temperature conditions.

M10.10 Second shaft extension

PS

This option is not compatible with variants RC, TC, U1, U2, EN1, EN2, EN3, EN4, EN5, EN6.
For shaft dimensions please see motor dimensions tables.

(F 64)

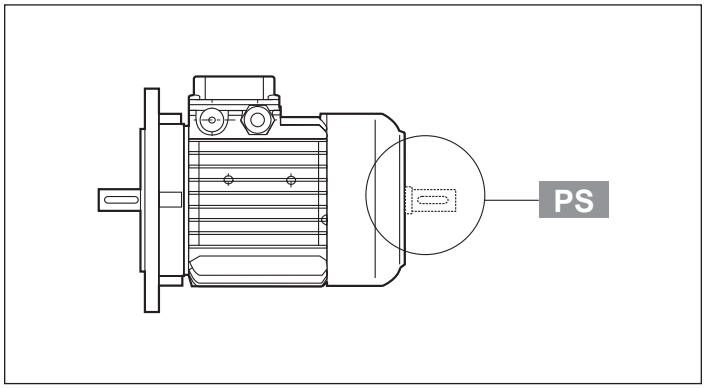

M10.11 Backstop device

AL **AR**

For applications where backdriving must be avoided, motors equipped with an anti run-back device can be used (available for the M series only). While allowing rotation in the direction required, this device operates instantaneously in case of a power failure, preventing the shaft from running back. The anti run-back device is life lubricated with special grease for this specific application. When ordering, customers should indicate the required rotation direction, AL or AR.
Never use the anti run-back device to prevent reverse rotation caused by faulty electrical connection. Table (F70) shows rated and maximum locking torques for the anti run-back devices. A diagram of the device can be seen in Table (F71). Overall dimensis are same as the corresponding brake motor. The direction of free rotation is described in the “MOTOR OPTIONS” section of specifically dedicated sections to gear units.

(F 65)

	Rated locking torque [Nm]	Max. locking torque [Nm]	Release speed [min^{-1}]
M1	6	10	750
M2	16	27	650
M3	54	92	520
M4	110	205	430

(F 66)

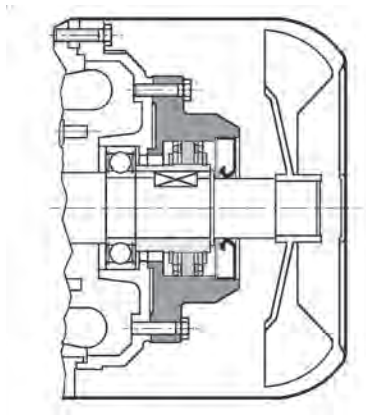

M10.12 Ventilation

Motors are cooled through outer air blow (IC 411 according to CEI EN 60034-6) and are equipped with a plastic radial fan, which operates in both directions.
Ensure that fan cover is installed at a suitable distance from the closest wall so to allow air circulation and servicing of motor and brake, if fitted.
On request, motors can be supplied with independently power-supplied forced ventilation system starting from BN 71 or M1 size.
Motor is cooled by an axial fan with independent power supply and fitted on the fan cover (IC 416 cooling system).
This version is used in case of motor driven by inverter so that steady torque operation is possible even at low speed or when high starting frequencies are needed.
Brake all motors with rear shaft projection (PS option) are excluded.

(F 67)

Power supply					
		V a.c. ± 10%	**Hz**	**P** [W]	**I** [A]
BN 71	**M1**	1~ 230	50 / 60	22	0.12
BN 80	**M2**			22	0.12
BN 90	**—**			40	0.30
BN 100 (*)	**M3**			50	0.25
BN 112	**—**	3~ 230 Δ / 400Y		50	0.26 / 0.15
BN 132S	**M4S**			110	0.38 / 0.22
BN 132M...BN 160MR	**M4L**				
BN 160...BN 180M	**M5**		50	180	1.25 / 0.72

This variant has two different models, called **U1** and **U2**, having the same longitudinal size. Longer side of fan cover (**DL**) is specified for both models in the table below. Overall dimension can be reckoned from motor size table.

(F 68)

Extra length for servoventilated motors			
		Δ L_1	**Δ L_2**
BN 71	**M1**	93	32
BN 80	**M2**	127	55
BN 90	**—**	131	48
BN 100	**M3**	119	28
BN 112	**—**	130	31
BN 132S	**M4S**	161	51
BN 132M	**M4L**	161	51

ΔL_1 = extra length to LB value of corresponding standard motor

ΔL_2 = extra length to LB value of corresponding brake motor

U1

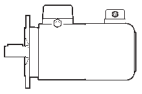

Fan wiring terminals are housed in a separate terminal box.
In brake motors of size BN 71...BN 160MR, M1...M4L, with **U1** model, the release lever cannot be positioned to AA.
The option is not applicable to motors compliant with the CSA and UL norms (option CUS).

U2

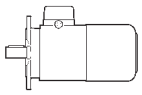

Fan terminals are wired in the motor terminal box.
The **U2** option does not apply to motors BN 160 through BN 200L, M5, with the only exception of motor BN 160MR for which the option is available instead and to motors with option CUS (ompliant to norms CSA and UL).

(F 69)

(*)			**V a.c. ± 10%**	**Hz**	**P** [W]	**I** [A]
	BN 100_U2	**M3**	3~ 230 Δ / 400Y	50 / 60	40	0.12 / 0.09

M10.13 Rain canopy

RC

The rain canopy protects the motor from dripping and avoids the ingress of solid bodies. It is recommended when motor is installed in a vertical position with the shaft downwards.
Relevant dimensions are indicated in the table below.
The drip cover is not compatible with variants PS, EN1, EN2, EN3, EN4, EN5, EN6.

(F 70)

		AQ	ΔV	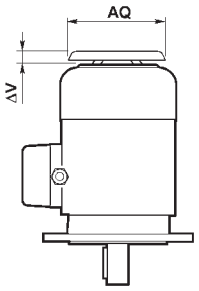
BN 63	**M05**	118	24	
BN 71	**M1**	134	27	
BN 80	**M2**	152	25	
BN 90	**—**	168	30	
BN 100	**M3**	190	28	
BN 112	**—**	211	32	
BN 132...BN 160MR	**M4**	254	32	
BN 160M...BN 180M	**M5**	302	36	
BN 180L...BN 200L	**—**	340	36	

M10.14 Textile canopy

TC

Option TC is a cover variant for textile industry environments, where lint may obstruct the fan grid and prevent a regular flow of cooling air.
This option is not compatible with variants EN1, EN2, EN3, EN4, EN5, EN6.
Overall dimensions are the same as drip cover type RC.

M10.15 Feedback units

Motors may be combined with six different types of encoders to achieve feedback circuits.
Configurations with double-extended shaft (PS) and rain canopy (RC, TC) are not compatible with encoder installation.

EN1

Incremental encoder, V_{IN} = 5 V, line-driver output RS 422.

EN2

Incremental encoder, V_{IN} = 10-30 V, line-driver output RS 422.

EN3

Incremental encoder, V_{IN} = 12-30 V, push-pull output 12-30 V

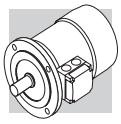

EN4

Encoder sin/cos, V_{IN} = 4.5-5.5 V, output Sinus 0.5V_{PP}.

EN5

Absolute encoder singleturn, HIPERFACE® interface, V_{IN} = 7-12 V.

EN6

Absolute encoder multiturn, HIPERFACE® interface, V_{IN} = 7-12 V.

(F 71)

		EN1	EN2	EN3	EN4	EN5	EN6
Interface		TTL/RS 422	TTL/RS 422	HTL/push-pull	Sinus 0.5 VPP	HIPERFACE®	HIPERFACE®
Power supply voltage	[V]	4...6	10...30	12...30	4.4...5.5	7...12	7...12
Output voltage	[V]	5	5	12...30	—	—	—
No-load operating current	[mA]	120	100	100	40	80	80
No. of pulses per revolution		1024					
Steps per revolution		—	—	—	—	15 bit	15 bit
Revolutions		—	—	—	—	—	12 bit
No. of signals		6 (A, B, Z + inverted signals)			6 (cos-, cos+, sin-, sin+, Z, $\overline{Z}$)	—	—
Max. output frequency	[kHz]	600			200		
Max. speed	[min^{-1}]	6000 (9000 min^{-1} for 10 s)					
Working temperature range	[°C]	-30 ... +100					
Protection class		IP 65					

(F 73)

EN1, EN2, EN3, EN4, EN5, EN6	
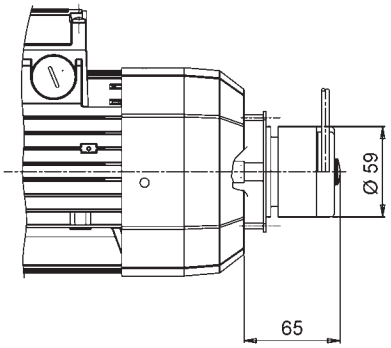	
BN 63...BN 200L	**M05...M5**
BN 63_FD...BN 200L_FD	**M05_FD...M5_FD**
BN 63_AFD...BN 160MR_AFD	**M05_AFD...M4LC_AFD**
BN 63_FA...BN 200L_FA	**M05_FA...M5_FA**

(F 72)

EN_ + U1		
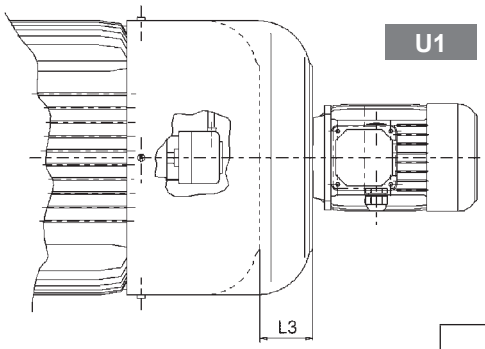		
		L3
BN 160M...BN 180M	**M5**	72
BN 180L...BN 200L	**-**	82
BN 160M_FD...BN 180M_FD	**M5_FD**	35
BN 180L_FD...BN 200L_FD	**-**	41

If the encoder device (option EN_) is specified on motors BN71...BN160MR / M1...M4, along with the independent fan cooling (options U1, U2), the extra length of motor is coincident with that of the correspondent U1 and U2 execution.

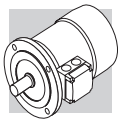

M10.16 Surface protection

C_

When no specific protection class is requested, the painted (ferrous) surfaces of motors are protected to at least corrosivity class C2 (UNI EN ISO 12944-2). For improved resistance to atmospheric corrosion, motors can be delivered with C3 and C4 surface protection.

SURFACE PROTECTION	Typical environments	Maximum surface temperature	Corrosivity class according to UNI EN ISO 12944-2
C3	Urban and industrial environments with up to 100% relative humidity (medium air pollution)	120°C	C3
C4	Industrial areas, coastal areas, chemical plant, with up to 100% relative humidity (high air pollution)	120°C	C4

Motors with optional protection to class C3 or C4 are available in a choice of colours. If no specific colour is requested (see the “PAINTING” option) motors are finished in RAL 7042.
Motors can also be supplied with surface protection for corrosivity class C5 according to UNI EN ISO 12944-2. Contact our Technical Service for further details.

M10.17 Painting

RAL_

Gearboxes with optional protection to class C3 or C4 are available in the colours listed in the following table.

PAINTING	Colour	RAL number
RAL7042*	Traffic Grey A	7042
RAL5010	Gentian Blue	5010
RAL9005	Jet Black	9005
RAL9006	White Aluminium	9006
RAL9010	Pure White	9010

* Gearboxes are supplied in this standard colour if no other colour is specified.

NOTE – “PAINTING” options can only be specified in conjunction with “SURFACE PROTECTION” options.

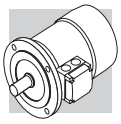

M10.18 Certificates

ACM

Certificate of compliance of motors

The document certifies the compliance of the product with the purchase order and the construction in conformity with the applicable procedures of the Bonfiglioli Quality System.

CC

Inspection certificate

The document entails checking on order compliance, the visual inspection of external conditions and instrumental testing of the electrical characteristics in unloaded conditions. Units inspected are sampled within the shipping batch and marked individually.

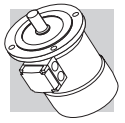

2P — 3000 min^{-1} - S1 — 50 Hz

															d.c. brake						c.c. brake with fixed air gap						a.c. brake				
															FD						AFD						FA				
P_n		n	M_n	IE1	η (100%)	η (75%)	η (50%)	cosφ	In 400V	Is / In	Ms / Mn	Ma / Mn	J_m x 10^{-4}	IM B5	Mod	Mb	Z_o 1/h		J_m x 10^{-4}	IM B5	Mod	Mb	Z_o 1/h	J_m x 10^{-4}	IM B5	Mod	Mb	Z_o 1/h	J_m x 10^{-4}	IM B5
kW		min^{-1}	Nm		%	%	%		A				kgm^2	Kg		Nm	NB	SB	kgm^2	Kg		Nm	SB	kgm^2	Kg		Nm		kgm^2	Kg
0.18	**BN 63A 2**	2730	0.63	○	59.9	56.9	51.9	0.77	0.56	3.0	2.1	2.0	2.0	3.5	**FD 02**	1.75	3900	4800	2.6	5.2	**AFD 02**	1.75	4800	2.6	5.0	**FA 02**	1.75	4800	2.6	5.0
0.25	**BN 63B 2**	2740	0.87	○	66.0	64.8	64.8	0.76	0.72	3.3	2.3	2.3	2.3	3.9	**FD 02**	1.75	3900	4800	3.0	5.6	**AFD 02**	1.75	4800	3.0	5.4	**FA 02**	1.75	4800	3.0	5.4
0.37	**BN 63C 2**	2800	1.26	○	69.1	66.8	66.8	0.78	0.99	3.9	2.6	2.6	3.3	5.1	**FD 02**	3.5	3600	4500	3.9	6.8	**AFD 02**	3.5	4500	3.9	6.6	**FA 02**	3.5	4500	3.9	6.6
0.37	**BN 71A 2**	2820	1.25	○	73.8	73.0	70.6	0.76	0.95	4.8	2.8	2.6	3.5	5.4	**FD 03**	3.5	3000	4100	4.6	8.1	**AFD 03**	5	4100	4.6	7.8	**FA 03**	3.5	4200	4.6	7.8
0.55	**BN 71B 2**	2820	1.86	○	76.0	75.8	74.8	0.76	1.37	5.0	2.9	2.8	4.1	6.2	**FD 03**	5	2900	4200	5.3	8.9	**AFD 03**	5	4200	5.3	8.6	**FA 03**	5	4200	5.3	8.6
0.75	**BN 71C 2**	2810	2.6	○	76.6	76.2	76.2	0.76	1.86	5.1	3.1	2.8	5.0	7.3	**FD 03**	5	1900	3300	6.1	10.0	**AFD 03**	7.5	3300	6.1	9.7	**FA 03**	5	3600	6.1	9.7
0.75	**BN 80A 2**	2810	2.6	•	76.2	75.5	68.3	0.81	1.75	4.8	2.6	2.2	7.8	8.6	**FD 04**	5	1700	3200	9.4	12.5	**AFD 04**	5	3200	9.4	12.1	**FA 04**	5	3200	9.4	12.4
1.1	**BN 80B 2**	2800	3.8	•	76.4	76.2	75.0	0.81	2.57	4.8	2.8	2.4	9.0	9.5	**FD 04**	10	1500	3000	10.6	13.4	**AFD 04**	10	3000	10.6	13.0	**FA 04**	10	3000	10.6	13.3
1.5	**BN 80C 2**	2800	5.1	•	79.1	79.5	77.2	0.81	3.4	4.9	2.7	2.4	11.4	11.3	**FD 04**	15	1300	2600	13.0	15.2	**AFD 04**	15	2600	13.0	14.8	**FA 04**	15	2600	13.0	15.1
1.5	**BN 90SA 2**	2870	5.0	•	82.0	81.5	78.1	0.80	3.4	5.9	2.7	2.6	12.5	12.3	**FD 14**	15	900	2200	14.1	16.5	**AFD 14**	15	2200	14.1	16.1	**FA 14**	15	2200	14.1	16.4
1.85	**BN 90SB 2**	2880	6.1	•	82.5	82.0	75.4	0.80	4.0	6.2	2.9	2.6	16.7	14	**FD 14**	15	900	2200	18.3	18.2	**AFD 14**	15	2200	18.3	17.8	**FA 14**	15	2200	18.3	18.1
2.2	**BN 90L 2**	2880	7.3	•	82.7	82.1	80.8	0.80	4.8	6.3	2.9	2.7	16.7	14	**FD 05**	26	900	2200	21	20	**AFD 05**	26	2200	21	19.4	**FA 05**	26	2200	21	20.7
3	**BN 100L 2**	2860	10.0	•	81.5	81.3	77.4	0.79	6.7	5.6	2.6	2.2	31	20	**FD 15**	26	700	1600	35	26	**AFD 15**	26	1600	35	25	**FA 15**	26	1600	35	27
4	**BN 100LB 2**	2870	13.3	•	83.1	83.0	77.8	0.80	8.7	5.8	2.7	2.5	39	23	**FD 15**	40	450	900	43	29	**AFD 15**	40	900	43	28	**FA 15**	40	1000	43	30
4	**BN 112M 2**	2900	13.2	•	85.5	84.5	83.0	0.82	8.2	6.9	3.0	2.9	57	28	**FD 06S**	40	—	950	66	39	**AFD 06S**	40	950	66	38	**FA 06S**	40	950	66	40
5.5	**BN 132SA 2**	2890	18.2	•	84.7	84.5	81.2	0.84	11.2	5.9	2.6	2.2	101	35	**FD 06**	50	—	600	112	48	**AFD 06**	62	600	112	47	**FA 06**	50	600	112	49
7.5	**BN 132SB 2**	2900	25	•	86.5	86.3	84.4	0.85	14.7	6.4	2.6	2.2	145	42	**FD 06**	50	—	550	154	55	**AFD 06**	62	550	154	54	**FA 06**	50	550	154	56
9.2	**BN 132M 2**	2930	30	•	87.0	86.5	83.6	0.86	17.7	6.7	2.8	2.3	178	53	**FD 56**	75	—	430	189	66	**AFD 06**	75	430	189	65	**FA 06**	75	430	189	67
11	**BN 160MR 2**	2920	36	•	87.6	87.0	86.0	0.88	20.6	6.9	2.9	2.5	210	65																
15	**BN 160MB 2**	2930	49	•	89.6	89.4	88.0	0.86	28.1	7.1	2.6	2.3	340	84																
18.5	**BN 160L 2**	2930	60	•	90.4	90.1	89.0	0.86	34	7.6	2.7	2.3	420	97																
22	**BN 180M 2**	2930	72	•	89.9	89.7	89.5	0.88	40	7.8	2.6	2.4	490	109																
30	**BN 200LA 2**	2930	98	•	90.7	90.1	87.6	0.89	54	7.8	2.7	2.9	770	140																

○ = n.a. • = IE1

4P — 1500 min^{-1} - S1 — 50 Hz

															d.c. brake						c.c. brake with fixed air gap						a.c. brake				
															FD						AFD						FA				
P_n		n	M_n	IE1	η (100%)	η (75%)	η (50%)	cosφ	In 400V	Is/In	Ms/Mn	Ma/Mn	J_m x 10^{-4}	IM B5	Mod	Mb	Z_o 1/h		J_m x 10^{-4}	IM B5	Mod	Mb	Z_o 1/h	J_m x 10^{-4}	IM B5	Mod	Mb	Z_o 1/h	J_m x 10^{-4}	IM B5
kW		min^{-1}	Nm		%	%	%		A				kgm^2	Kg		Nm	NB	SB	kgm^2	Kg		Nm	SB	kgm^2	Kg		Nm		kgm^2	Kg
0.06	**BN 56A 4**	1340	0.43	○	46.8	44.2	41.3	0.65	0.28	2.6	2.3	2.0	1.5	3.1																
0.09	**BN 56B 4**	1350	0.64	○	51.7	47.6	42.9	0.60	0.42	2.6	2.5	2.4	1.5	3.1																
0.12	**BN 63A 4**	1350	0.85	○	59.8	56.2	47.0	0.62	0.47	2.6	1.9	1.8	2.0	3.5	**FD 02**	1.75	10000	13000	2.6	5.2	**AFD 02**	1.75	13000	2.6	5.0	**FA 02**	1.75	13000	2.6	5.0
0.18	**BN 63B 4**	1320	1.30	○	54.8	52.9	52.5	0.67	0.71	2.6	2.2	2.0	2.3	3.9	**FD 02**	3.5	10000	13000	3.0	5.6	**AFD 02**	3.5	13000	3.0	5.4	**FA 02**	3.5	13000	3.0	5.4
0.25	**BN 63C 4**	1340	1.78	○	65.3	65.0	57.9	0.69	0.80	2.7	2.1	1.9	3.3	5.1	**FD 02**	3.5	7800	10000	3.9	6.8	**AFD 02**	3.5	10000	3.9	6.6	**FA 02**	3.5	10000	3.9	6.6
0.25	**BN 71A 4**	1380	1.73	○	63.7	62.2	59.1	0.73	0.78	3.3	1.9	1.7	5.8	5.1	**FD 03**	3.5	7700	11000	6.9	7.8	**AFD 03**	5	11000	6.9	7.5	**FA 03**	3.5	11000	6.9	7.5
0.37	**BN 71B 4**	1370	2.6	○	66.8	66.7	63.0	0.76	1.05	3.7	2.0	1.9	6.9	5.9	**FD 03**	5	6000	9400	8.0	8.6	**AFD 03**	5	9400	8.0	8.3	**FA 03**	5.0	9400	8.0	8.3
0.55	**BN 71C 4**	1380	3.8	○	69.0	68.9	68.8	0.74	1.55	4.1	2.3	2.3	9.1	7.3	**FD 53**	7.5	4300	8700	10.2	10.0	**AFD 03**	7.5	8700	10.2	9.7	**FA 03**	7.5	8700	10.2	9.7
0.55	**BN 80A 4**	1390	3.8	○	72.0	71.3	69.7	0.77	1.43	4.1	2.3	2.0	15	8.2	**FD 04**	10	4100	8000	16.6	12.1	**AFD 04**	10	8000	16.6	11.7	**FA 04**	10	8000	16.6	12.0
0.75	**BN 80B 4**	1400	5.1	•	75.0	74.5	69.3	0.78	1.85	4.9	2.7	2.5	20	9.9	**FD 04**	15	4100	7800	22	13.8	**AFD 04**	15	7800	22	13.4	**FA 04**	15	7800	22	13.7
1.1	**BN 80C 4**	1400	7.5	•	75.5	76.2	70.4	0.78	2.7	5.1	2.8	2.5	25	11.3	**FD 04**	15	2600	5300	27	15.2	**AFD 04**	15	5300	27	14.8	**FA 04**	15	5300	27	15.1
1.1	**BN 90S 4**	1390	7.6	•	76.5	76.2	72.2	0.77	2.70	4.6	2.6	2.2	21	12.2	**FD 14**	15	4800	8000	23	16.4	**AFD 14**	15	8000	23	16	**FA 14**	15	8000	23	16.3
1.5	**BN 90LA 4**	1410	10.2	•	78.7	78.5	74.9	0.77	3.6	5.3	2.8	2.4	28	13.6	**FD 05**	26	3400	6000	32	19.6	**AFD 05**	26	6000	32	19	**FA 05**	26	6000	32	20.3
1.85	**BN 90LB 4**	1390	12.7	•	78.6	78.9	77.2	0.79	4.3	5.1	2.8	2.6	30	15.1	**FD 05**	26	3200	5900	34	21.1	**AFD 05**	26	5900	34	20.5	**FA 05**	26	5900	34	21.8
2.2	**BN 100LA 4**	1410	14.9	•	81.1	81.4	79.9	0.75	5.2	4.5	2.2	2.0	40	18	**FD 15**	40	2600	4700	44	25	**AFD 15**	40	4700	44	24.4	**FA 15**	40	4700	44	25
3	**BN 100LB 4**	1410	20	•	82.6	83.8	83.7	0.77	6.8	5.0	2.3	2.2	54	22	**FD 15**	40	2400	4400	58	28	**AFD 15**	40	4400	58	27	**FA 15**	40	4400	58	29
4	**BN 112M 4**	1430	27	•	84.4	84.2	81.6	0.81	8.4	5.6	2.7	2.5	98	30	**FD 06S**	60	—	1400	107	40	**AFD 06S**	60	1400	107	39	**FA 06S**	60	2100	107	42
5.5	**BN 132S 4**	1440	36	•	84.7	84.8	82.5	0.81	11.6	5.5	2.3	2.2	213	44	**FD 56**	75	—	1050	223	57	**AFD 06**	75	1050	223	56	**FA 06**	75	1200	223	58
7.5	**BN 132MA 4**	1440	50	•	86.0	86.3	85.3	0.81	15.5	5.7	2.5	2.4	270	53	**FD 06**	100	—	950	280	66	**AFD 06**	100	950	280	65	**FA 07**	100	1000	280	71
9.2	**BN 132MB 4**	1440	61	•	88.4	88.6	87.5	0.81	18.8	5.9	2.7	2.5	319	59	**FD 07**	150	—	900	342	75	**AFD 07**	150	900	342	73	**FA 07**	150	900	342	77
11	**BN 160MR 4**	1440	73	•	87.6	87.8	86.0	0.81	22.4	6.0	2.7	2.5	360	70	**FD 07**	150	—	850	382	86	**AFD 07**	150	850	382	84	**FA 07**	150	850	382	88
15	**BN 160L 4**	1460	98	•	88.7	88.5	88.4	0.81	30	6.0	2.3	2.1	650	99	**FD 08**	200	—	750	725	129						**FA 08**	200	750	710	128
18.5	**BN 180M 4**	1460	121	•	89.3	89.5	89.2	0.81	37	6.2	2.6	2.5	790	115	**FD 08**	250	—	700	865	145						**FA 08**	250	700	850	144
22	**BN 180L 4**	1460	144	•	89.9	90.0	90.0	0.80	44	6.4	2.5	2.5	1250	135	**FD 09**	300	—	400	1450	175										
30	**BN 200L 4**	1460	196	•	91.4	91.7	91.0	0.80	59	7.1	2.7	2.8	1650	157	**FD 09**	400	—	300	1850	197										

○ = n.a. • = IE1

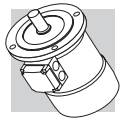

6P — 1000 min^{-1} - S1 — 50 Hz

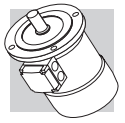

																d.c. brake						c.c. brake with fixed air gap						a.c. brake					
																FD						AFD						FA					
P_n		n	M_n	IE1	η (100%)	η (75%)	η (50%)	cosφ	In 400V	Is/In	Ms/Mn	Ma/Mn	J_m x 10^{-4}	IM B5	Mod	Mb	Z_o 1/h		J_m x 10^{-4}	IM B5	Mod	Mb	Z_o 1/h	J_m x 10^{-4}	IM B5	Mod	Mb	Z_o 1/h	J_m x 10^{-4}	IM B5			
kW		min^{-1}	Nm		%	%	%		A				kgm^2	Kg		Nm	NB	SB	kgm^2	Kg		Nm	SB	kgm^2	Kg		Nm		kgm^2	Kg			
0.09	**BN 63A 6**	880	0.98	○	41.0	41.0	32.9	0.53	0.60	2.1	2.1	1.8	3.4	4.6	**FD 02**	3.5	9000	14000	4.0	6.3	**AFD 02**	3.5	14000	4.0	6.1	**FA 02**	3.5	14000	4.0	6.1			
0.12	**BN 63B 6**	870	1.32	○	45.0	44.0	41.8	0.60	0.64	2.1	1.9	1.7	3.7	4.9	**FD 02**	3.5	9000	14000	4.3	6.6	**AFD 02**	3.5	14000	4.3	6.4	**FA 02**	3.5	14000	4.3	6.4			
0.18	**BN 71A 6**	900	1.91	○	55.0	55.5	51.0	0.69	0.68	2.6	1.9	1.7	8.4	5.5	**FD 03**	5	8100	13500	9.5	8.2	**AFD 03**	5	13500	9.5	7.9	**FA 03**	5.0	13500	9.5	7.9			
0.25	**BN 71B 6**	900	2.70	○	62.0	58.5	51.4	0.71	0.82	2.6	1.9	1.7	10.9	6.7	**FD 03**	5	7800	13000	12	9.4	**AFD 03**	5	13000	12	9.1	**FA 03**	5.0	13000	12	9.1			
0.37	**BN 71C 6**	910	3.9	○	66.0	60.0	53.3	0.69	1.17	3.0	2.4	2.0	12.9	7.7	**FD 53**	7.5	5100	9500	14	10.4	**AFD 03**	7.5	9500	14	10.1	**FA 03**	7.5	9500	14	10.1			
0.37	**BN 80A 6**	910	3.9	○	68.0	67.4	63.3	0.68	1.15	3.2	2.2	2.0	21	9.9	**FD 04**	10	5200	8500	23	13.8	**AFD 04**	10	8500	23	13.4	**FA 04**	10	8500	23	13.7			
0.55	**BN 80B 6**	920	5.7	○	70.0	69.8	64.3	0.68	1.67	3.9	2.6	2.2	25	11.3	**FD 04**	15	4800	7200	27	15.2	**AFD 04**	15	7200	27	14.8	**FA 04**	15	7200	27	15.1			
0.75	**BN 80C 6**	920	7.8	•	70.0	70.0	64.4	0.65	2.38	3.8	2.5	2.2	28	12.2	**FD 04**	15	3400	6400	30	16.1	**AFD 04**	15	6400	30	15.7	**FA 04**	15	6400	30	16.0			
0.75	**BN 90S 6**	920	7.8	•	70.0	69.0	64.2	0.68	2.27	3.8	2.4	2.2	26	12.6	**FD 14**	15	3400	6500	28	16.8	**AFD 14**	15	6500	28	16.4	**FA 14**	15	6500	28	16.7			
1.1	**BN 90L 6**	920	11.4	•	72.9	72.6	69.1	0.69	3.2	3.9	2.3	2.0	33	15	**FD 05**	26	2700	5000	37	21	**AFD 05**	26	5000	37	20	**FA 05**	26	5000	37	22			
1.5	**BN 100LA 6**	940	15.2	•	75.2	74.2	70.3	0.72	4.0	4.1	2.1	2.0	82	22	**FD 15**	40	1900	4100	86	28	**AFD 15**	40	4100	86	27	**FA 15**	40	4100	86	29			
1.85	**BN 100LB 6**	930	19.0	•	76.6	72.8	62.6	0.73	4.8	4.6	2.1	2.0	95	24	**FD 15**	40	1700	3600	99	30	**AFD 15**	40	3600	99	29	**FA 15**	40	3600	99	31			
2.2	**BN 112M 6**	940	22	•	78.5	79.0	76.5	0.73	5.5	4.8	2.2	2.0	168	32	**FD 06S**	60	—	2100	177	42	**AFD 06S**	60	2100	177	41	**FA 06S**	60	2100	177	44			
3	**BN 132S 6**	940	30	•	79.7	77.0	75.1	0.76	7.1	5.1	1.9	1.8	216	36	**FD 56**	75	—	1400	226	49	**AFD 06**	75	1400	226	48	**FA 06**	75	1400	226	50			
4	**BN 132MA 6**	950	40	•	81.4	81.5	79.5	0.77	9.2	5.5	2.0	1.8	295	45	**FD 06**	100	—	1200	305	58	**AFD 06**	100	1200	305	57	**FA 07**	100	1200	318	63			
5.5	**BN 132MB 6**	945	56	•	83.1	80.9	79.1	0.78	12.2	6.1	2.1	1.9	383	56	**FD 07**	150	—	1050	406	72	**AFD 07**	150	1050	406	70	**FA 07**	150	1050	406	74			
7.5	**BN 160M 6**	955	75	•	85.0	85.0	84.8	0.81	15.7	5.9	2.2	2.0	740	83	**FD 08**	170	—	900	815	112						**FA 08**	170	900	815	113			
11	**BN 160L 6**	960	109	•	86.4	86.5	85.9	0.81	22.7	6.6	2.5	2.3	970	103	**FD 08**	200	—	800	1045	133						**FA 08**	200	800	1045	133			
15	**BN 180L 6**	970	148	•	87.7	88.0	87.3	0.82	30	6.2	2.0	2.4	1550	130	**FD 09**	300	—	600	1750	170													
18.5	**BN 200LA 6**	960	184	•	88.6	88.0	87.3	0.81	37	5.9	2.0	2.3	1700	145	**FD 09**	400	—	450	1900	185													

○ = n.a. • = IE1

8P — 750 min^{-1} - S1 — 50 Hz

													d.c. brake					c.c. brake with fixed air gap					a.c. brake				
													FD					AFD					FA				
P_n		n	M_n	η	cosφ	In 400V	Is / In	Ms / Mn	Ma / Mn	J_m x 10^{-4}	IM B5		Mod	Mb	Z_o 1/h		J_m x 10^{-4}	IM B5	Mod	Mb	Z_o 1/h	J_m x 10^{-4}	IM B5	Mod	Mb	Z_o 1/h	J_m x 10^{-4}	IM B5
kW		min^{-1}	Nm	%		A				kgm^2	Kg			Nm	NB	SB	kgm^2	Kg		Nm	SB	kgm^2	Kg		Nm		kgm^2	Kg
0.09	**BN 71A**	**8**	680	1.26	47	0.59	0.47	2.3	2.4	2.3	10.9	6.7	**FD 03**	3.5	9000	16000	12.0	9.4	**AFD 03**	5	16000	12.0	9.1	**FA 03**	3.5	16000	12.0	9.1
0.12	**BN 71B**	**8**	680	1.69	51	0.59	0.58	2.1	2.3	2.2	12.9	7.7	**FD 03**	5.0	9000	16000	14.0	10.4	**AFD 03**	5	16000	14.0	10.1	**FA 03**	5.0	16000	14.0	10.1
0.18	**BN 80A**	**8**	690	2.49	51	0.60	0.85	2.4	2.2	2.2	15	8.2	**FD 04**	5.0	6500	11000	16.6	12.1	**AFD 04**	5	11000	16.6	11.7	**FA 04**	5.0	11000	16.6	12.0
0.25	**BN 80B**	**8**	680	3.51	54	0.63	1.06	2.4	2.0	1.9	20	9.9	**FD 04**	10.0	6000	10000	22	13.8	**AFD 04**	10	10000	22	13.4	**FA 04**	10.0	10000	23	13.7
0.37	**BN 90S**	**8**	675	5.2	58	0.60	1.53	2.6	2.3	2.1	26	12.6	**FD 14**	15.0	4800	7500	28	16.8	**AFD 14**	15	7500	28	16.4	**FA 14**	15.0	7500	28	16.7
0.55	**BN 90L**	**8**	670	7.8	62	0.60	2.13	2.6	2.2	2.0	33	15	**FD 05**	26	4000	6400	37	21	**AFD 05**	26	6400	37	20.4	**FA 05**	26	6400	37	22
0.75	**BN 100LA**	**8**	700	10.2	68	0.63	2.53	3.4	1.9	1.7	82	22	**FD 15**	26	2800	4800	86	28	**AFD 15**	26	4800	86	27.4	**FA 15**	26	4800	86	29
1.1	**BN 100LB**	**8**	700	15.0	68	0.64	3.65	3.2	1.7	1.7	95	24	**FD 15**	40	2500	4000	99	30	**AFD 15**	40	4000	99	29.4	**FA 15**	40	4000	99	31
1.5	**BN 112M**	**8**	710	20.2	71	0.66	4.6	3.7	1.8	1.9	168	32	**FD 06S**	60	—	3000	177	42	**AFD 06S**	60	3000	177	41	**FA 06S**	60	3000	177	44
2.2	**BN 132S**	**8**	710	29.6	75	0.66	6.4	3.8	1.8	2.0	295	45	**FD 56**	75	—	2300	305	58	**AFD 06**	75	2300	305	56.8	**FA 06**	75	2300	305	56
3	**BN 132MA**	**8**	710	40.4	76	0.69	8.3	3.9	1.6	1.8	370	53	**FD 06**	100	—	1900	394	69	**AFD 06**	100	1900	394	67.8	**FA 07**	100	1900	406	74

2/4P — 3000/1500 min^{-1} - S1 — 50 Hz

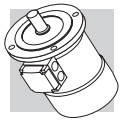

													d.c. brake						c.c. brake with fixed air gap						a.c. brake				
													FD						AFD						FA				
P_n kW			n min^{-1}	M_n Nm	η %	cosφ	In 400V A	Is / In	Ms / Mn	Ma / Mn	J_m x 10^{-4} kgm^2	IM B5 Kg	Mod	Mb Nm	Z_o 1/h NB	Z_o 1/h SB	J_m x 10^{-4} kgm^2	IM B5 Kg	Mod	Mb Nm	Z_o 1/h SB	J_m x 10^{-4} kgm^2	IM B5 Kg	Mod	Mb Nm	Z_o 1/h	J_m x 10^{-4} kgm^2	IM B5 Kg
0.20	**BN 63B**	**2**	2700	0.71	55	0.82	0.64	3.5	2.1	1.9	2.9	4.4	**FD 02**	3.5	2200	2600	3.5	6.1	**AFD 02**	3.5	2600	3.5	5.9	**FA 02**	3.5	2600	3.5	5.9
0.15		**4**	1350	1.06	49	0.67	0.66	2.6	1.8	1.7					4000	5100					5100					5100		
0.28	**BN 71A**	**2**	2700	0.99	56	0.82	0.88	2.9	1.9	1.7	4.7	4.4	**FD 03**	3.5	2100	2400	5.8	7.1	**AFD 03**	5	2400	5.8	6.8	**FA 03**	3.5	2400	5.8	6.8
0.20		**4**	1370	1.39	59	0.72	0.68	3.1	1.8	1.7					3800	4800					4800					4800		
0.37	**BN 71B**	**2**	2740	1.29	56	0.82	1.16	3.5	1.8	1.8	5.8	5.1	**FD 03**	5.0	1400	2100	6.9	7.8	**AFD 03**	5	2100	6.9	7.5	**FA 03**	5.0	2100	6.9	7.5
0.25		**4**	1390	1.72	60	0.73	0.82	3.3	2.0	1.9					2900	4200					4200					4200		
0.45	**BN 71C**	**2**	2780	1.55	63	0.85	1.21	3.8	1.8	1.8	6.9	5.9	**FD 03**	5.0	1400	2100	8.0	8.6	**AFD 03**	5	2100	8.0	8.3	**FA 03**	5.0	2100	8.0	8.3
0.30		**4**	1400	2.0	63	0.73	0.94	3.6	2.0	1.9					2900	4200					4200					4200		
0.55	**BN 80A**	**2**	2800	1.9	63	0.85	1.48	3.9	1.7	1.7	15	8.2	**FD 04**	5.0	1600	2300	17	12.1	**AFD 04**	5	2300	17	11.7	**FA 04**	5.0	2300	16.6	12.0
0.37		**4**	1400	2.5	67	0.79	1.01	4.1	1.8	1.9					3000	4000					4000					4000		
0.75	**BN 80B**	**2**	2780	2.6	65	0.85	1.96	3.8	1.9	1.8	20	9.9	**FD 04**	10	1400	1600	22	13.8	**AFD 04**	10	1600	22	13.4	**FA 04**	10	1600	22	13.7
0.55		**4**	1400	3.8	68	0.81	1.44	3.9	1.7	1.7					2700	3600					3600					3600		
1.1	**BN 90S**	**2**	2790	3.8	71	0.82	2.73	4.7	2.3	2.0	21	12.2	**FD 14**	10	1500	1600	23	16.4	**AFD 14**	10	1600	23	16	**FA 14**	10	1600	23	16.3
0.75		**4**	1390	5.2	66	0.79	2.08	4.6	2.4	2.2					2300	2800					2800					2800		
1.5	**BN 90L**	**2**	2780	5.2	70	0.85	3.64	4.5	2.4	2.1	28	14.0	**FD 05**	26	1050	1200	32	20	**AFD 05**	26	1200	32	19.4	**FA 05**	26	1200	32	21
1.1		**4**	1390	7.6	73	0.81	2.69	4.7	2.5	2.2					1600	2000					2000					2000		
2.2	**BN 100LA**	**2**	2800	7.5	72	0.85	5.2	4.5	2.0	1.9	40	18.3	**FD 15**	26	600	900	44	25	**AFD 15**	26	900	44	24.4	**FA 15**	26	900	44	25
1.5		**4**	1410	10.2	73	0.79	3.8	4.7	2.0	2.0					1300	2300					2300					2300		
3.5	**BN 100LB**	**2**	2850	11.7	80	0.84	7.5	5.4	2.2	2.1	61	25	**FD 15**	40	500	900	65	31	**AFD 15**	40	900	65	30	**FA 15**	40	900	65	32
2.5		**4**	1420	16.8	82	0.80	5.5	5.2	2.2	2.2					1000	2100					2100					2100		
4	**BN 112M**	**2**	2880	13.3	79	0.83	8.8	6.1	2.4	2.0	98	30	**FD 06S**	60	—	700	107	40	**AFD 06S**	60	700	107	39	**FA 06S**	60	700	107	42
3.3		**4**	1420	22.2	80	0.80	7.4	5.1	2.1	2.0					—	1200					1200					1200		
5.5	**BN 132S**	**2**	2890	18.2	80	0.87	11.4	5.9	2.4	2.0	213	44	**FD 56**	75	—	350	223	57	**AFD 06**	75	350	223	56	**FA 06**	75	350	223	58
4.4		**4**	1440	29	82	0.84	9.2	5.3	2.2	2.0					—	900					900					900		
7.5	**BN 132MA**	**2**	2900	25	82	0.87	15.2	6.5	2.4	2.0	270	53	**FD 06**	100	—	350	280	66	**AFD 06**	100	350	280	65	**FA 07**	100	350	293	71
6		**4**	1430	40	84	0.85	12.1	5.8	2.3	2.1					—	900					900					900		
9.2	**BN 132MB**	**2**	2920	30	83	0.86	18.6	6.0	2.6	2.2	319	59	**FD 07**	150	—	300	342	75	**AFD 07**	150	300	342	73	**FA 07**	150	300	342	77
7.3		**4**	1440	48	85	0.85	14.6	5.5	2.3	2.1					—	800					800					800		

2/6P — 3000/1000 min^{-1} - S3 60/40% — 50 Hz

													d.c. brake						c.c. brake with fixed air gap						a.c. brake				
													FD						AFD						FA				
P_n kW			n min^{-1}	M_n Nm	η %	cosφ	In 400V A	Is/In	Ms/Mn	Ma/Mn	J_m x 10^{-4} kgm^2	IM B5 Kg	Mod	Mb Nm	Z_o 1/h NB	Z_o 1/h SB	J_m x 10^{-4} kgm^2	IM B5 Kg	Mod	Mb Nm	Z_o 1/h SB	J_m x 10^{-4} kgm^2	IM B5 Kg	Mod	Mb Nm	Z_o 1/h	J_m x 10^{-4} kgm^2	IM B5 Kg
0.25	**BN 71A**	**2**	2850	0.84	60	0.82	0.73	4.3	1.9	1.8	6.9	5.9	**FD 03**	1.75	1500	1700	8.0	8.6	**AFD 03**	2.5	1700	8.0	8.3	**FA 03**	2.5	1700	8.0	8.3
0.08		**6**	910	0.84	43	0.70	0.38	2.1	1.4	1.5					10000	13000					13000					13000		
0.37	**BN 71B**	**2**	2880	1.23	62	0.80	1.08	4.4	1.9	1.8	9.1	7.3	**FD 03**	3.5	1000	1300	10.2	10.0	**AFD 03**	5	1300	10.2	9.7	**FA 03**	3.5	1300	10.2	9.7
0.12		**6**	900	1.27	44	0.73	0.54	2.4	1.4	1.5					9000	11000					11000					11000		
0.55	**BN 80A**	**2**	2800	1.88	63	0.86	1.47	4.5	1.9	1.7	20	9.9	**FD 04**	5.0	1500	1800	22	13.8	**AFD 04**	5	1800	22	13.4	**FA 04**	5.0	1800	22	13.7
0.18		**6**	930	1.85	52	0.65	0.77	3.3	2.0	1.9					4100	6300					6300					6300		
0.75	**BN 80B**	**2**	2800	2.6	66	0.87	1.89	4.3	1.8	1.6	25	11.3	**FD 04**	5.0	1700	1900	27	15.2	**AFD 04**	5	1900	27	14.8	**FA 04**	5.0	1900	27	15.1
0.25		**6**	930	2.6	54	0.67	1.00	3.2	1.7	1.8					3800	6000					6000					6000		
1.10	**BN 90L**	**2**	2860	3.7	67	0.84	2.82	4.7	2.1	1.9	28	14.0	**FD 05**	13	1400	1600	32	20	**AFD 05**	13	1600	32	19.4	**FA 05**	13	1600	32	21
0.37		**6**	920	3.8	59	0.71	1.27	3.3	1.6	1.6					3400	5200					5200					5200		
1.5	**BN 100LA**	**2**	2880	5	73	0.84	3.53	5.1	1.9	2.0	40	18.3	**FD 15**	13	1000	1200	44	24	**AFD 15**	13	1200	44	23.4	**FA 15**	13	1200	44	25
0.55		**6**	940	5.6	64	0.67	1.85	3.5	1.7	1.8					2900	4000					4000					4000		
2.2	**BN 100LB**	**2**	2900	7.2	77	0.85	4.9	5.9	2.0	2.0	61	25	**FD 15**	26	700	900	65	31	**AFD 15**	26	900	65	30	**FA 15**	26	900	65	32
0.75		**6**	950	7.5	67	0.64	2.5	3.3	1.9	1.8					2100	3000					3000					3000		
3	**BN 112M**	**2**	2900	9.9	78	0.87	6.4	6.3	2.0	2.1	98	30	**FD 06S**	40	—	1000	107	40	**AFD 06S**	40	1000	107	39	**FA 06S**	40	1000	107	32
1.1		**6**	950	11.1	72	0.64	3.4	3.9	1.8	1.8					—	2600					2600					2600		
4.5	**BN 132S**	**2**	2910	14.8	78	0.84	9.9	5.8	1.9	1.8	213	44	**FD 56**	37	—	500	223	57	**AFD 06**	37	500	223	56	**FA 06**	37	500	223	58
1.5		**6**	960	14.9	74	0.67	4.4	4.2	1.9	2.0					—	2100					2100					2100		
5.5	**BN 132M**	**2**	2920	18.0	78	0.87	11.7	6.2	2.1	1.9	270	53	**FD 56**	50	—	400	280	66	**AFD 06**	62	400	280	65	**FA 06**	50	400	280	67
2.2		**6**	960	22	77	0.71	5.8	4.3	2.1	2.0					—	1900					1900					1900		

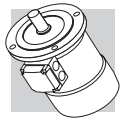

2/8P — 3000/750 min^{-1} - S3 60/40% — 50 Hz

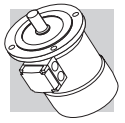

													d.c. brake						c.c. brake with fixed air gap						a.c. brake				
													FD						AFD						FA				
P_n kW			n min^{-1}	M_n Nm	η %	cosφ	In 400V A	Is/In	Ms/Mn	Ma/Mn	J_m x 10^{-4} kgm^2	IM B5 Kg	Mod	Mb Nm	Z_o 1/h NB	Z_o 1/h SB	J_m x 10^{-4} kgm^2	IM B5 Kg	Mod	Mb Nm	Z_o 1/h SB	J_m x 10^{-4} kgm^2	IM B5 Kg	Mod	Mb Nm	Z_o 1/h	J_m x 10^{-4} kgm^2	IM B5 Kg
0.25	**BN 71A**	**2**	2790	0.86	61	0.87	0.68	3.9	1.8	1.9	10.9	6.7	**FD 03**	1.75	1300	1400	12	9.4	**AFD 03**	2.5	1400	12	9.1	**FA 03**	2.5	1400	12	9.1
0.06		**8**	680	0.84	31	0.61	0.46	2.0	1.8	1.9					10000	13000					13000					13000		
0.37	**BN 71B**	**2**	2800	1.26	63	0.86	0.99	3.9	1.8	1.9	12.9	7.7	**FD 03**	3.5	1200	1300	14	10.4	**AFD 03**	5	1300	14	10.1	**FA 03**	3.5	1300	14	10.1
0.09		**8**	670	1.28	34	0.75	0.51	1.8	1.4	1.5					9500	13000					13000					13000		
0.55	**BN 80A**	**2**	2830	1.86	66	0.86	1.40	4.4	2.1	2.0	20	9.9	**FD 04**	5.0	1500	1800	22	13.8	**AFD 04**	5	1800	22	13.4	**FA 04**	5.0	1800	22	13.7
0.13		**8**	690	1.80	41	0.64	0.72	2.3	1.6	1.7					5600	8000					8000					8000		
0.75	**BN 80B**	**2**	2800	2.6	68	0.88	1.81	4.6	2.1	2.0	25	11.3	**FD 04**	10	1700	1900	27	15.2	**AFD 04**	10	1900	27	14.8	**FA 04**	10	1900	27	15.1
0.18		**8**	690	2.5	43	0.66	0.92	2.3	1.6	1.7					4800	7300					7300					7300		
1.10	**BN 90L**	**2**	2830	3.7	63	0.84	3.00	4.5	2.1	1.9	28	14.0	**FD 05**	13	1400	1600	32	20	**AFD 05**	13	1600	32	19.4	**FA 05**	13	1600	32	21
0.28		**8**	690	3.9	48	0.63	1.34	2.4	1.8	1.9					3400	5100					5100					5100		
1.5	**BN 100LA**	**2**	2880	5.0	69	0.85	3.69	4.7	1.9	1.8	40	18.3	**FD 15**	13	1000	1200	44	25	**AFD 15**	13	1200	44	14.4	**FA 15**	13	1200	44	25
0.37		**8**	690	5.1	46	0.63	1.84	2.1	1.6	1.6					3300	5000					5000					5000		
2.4	**BN 100LB**	**2**	2900	7.9	75	0.82	5.6	5.4	2.1	2.0	61	25	**FD 15**	26	550	700	65	31	**AFD 15**	26	700	65	30	**FA 15**	26	700	65	32
0.55		**8**	700	7.5	54	0.58	2.5	2.6	1.8	1.8					2000	3500					3500					3500		
3	**BN 112M**	**2**	2900	9.9	76	0.87	6.5	6.3	2.1	1.9	98	30	**FD 06S**	40	—	900	107	40	**AFD 06S**	40	900	107	39	**FA 06S**	40	900	107	42
0.75		**8**	690	10.4	60	0.65	2.8	2.5	1.6	1.6					—	2900					2900					2900		
4	**BN 132S**	**2**	2870	13.3	73	0.84	9.4	5.6	2.3	2.4	213	44	**FD 56**	37	—	500	223	57	**AFD 06**	37	500	223	56	**FA 06**	37	500	223	58
1		**8**	690	13.8	66	0.62	3.5	2.9	1.9	1.8					—	3500					3500					3500		
5.5	**BN 132M**	**2**	2870	18.3	75	0.84	12.6	6.1	2.4	2.5	270	53	**FD 06**	50	—	400	280	66	**AFD 06**	62	400	280	65	**FA 06**	50	400	280	67
1.5		**8**	690	21	68	0.63	5.1	2.9	1.9	1.9					—	2400					2400					2400		

2/12P — 3000/500 min^{-1} - S3 60/40% — 50 Hz

													d.c. brake						c.c. brake with fixed air gap						a.c. brake				
													FD						AFD						FA				
P_n kW			n min^{-1}	M_n Nm	η %	cosφ	In 400V A	Is/In	Ms/Mn	Ma/Mn	J_m x 10^{-4} kgm^2	IM B5 Kg	Mod	Mb Nm	Z_o 1/h NB	Z_o 1/h SB	J_m x 10^{-4} kgm^2	IM B5 Kg	Mod	Mb Nm	Z_o 1/h SB	J_m x 10^{-4} kgm^2	IM B5 Kg	Mod	Mb Nm	Z_o 1/h	J_m x 10^{-4} kgm^2	IM B5 Kg
0.55	**BN 80B**	**2**	2820	1.86	64	0.89	1.39	4.2	1.6	1.7	25	11.3	**FD 04**	5.0	1000	1300	27	15.2	**AFD 04**	5	1300	27	14.8	**FA 04**	5.0	1300	27	15.1
0.09		**12**	430	2.0	30	0.63	0.69	1.8	1.9	1.8					8000	12000					12000					12000		
0.75	**BN 90L**	**2**	2790	2.6	56	0.89	2.17	4.2	1.8	1.7	26	12.6	**FD 05**	13	1000	1150	30	18.6	**AFD 05**	13	1150	30	18.0	**FA 05**	13	1150	30	19.3
0.12		**12**	430	2.7	26	0.63	1.06	1.7	1.4	1.6					4600	6300					6300					6300		
1.10	**BN 100LA**	**2**	2850	3.7	65	0.85	2.87	4.5	1.6	1.8	40	18.3	**FD 15**	13	700	900	44	25	**AFD 15**	13	900	44	24.4	**FA 15**	13	900	44	25
0.18		**12**	430	4.0	26	0.54	1.85	1.5	1.3	1.5					4000	6000					6000					6000		
1.5	**BN 100LB**	**2**	2900	4.9	67	0.86	3.76	5.6	1.9	1.9	54	22	**FD 15**	13	700	900	58	28	**AFD 15**	13	900	58	27	**FA 15**	13	900	58	29
0.25		**12**	440	5.4	36	0.46	2.18	1.8	1.7	1.8					3800	5000					5000					5000		
2	**BN 112M**	**2**	2900	6.6	74	0.88	4.43	6.5	2.1	2.0	98	30	**FD 06S**	20	—	800	107	40	**AFD 06S**	20	800	107	39	**FA 06S**	20	800	107	42
0.3		**12**	460	6.2	46	0.43	2.19	2.0	2.1	2.0					—	3400					3400					3400		
3	**BN 132S**	**2**	2920	9.8	74	0.87	6.7	6.8	2.3	1.9	213	44	**FD 56**	37	—	450	223	57	**AFD 06**	37	450	223	56	**FA 06**	37	450	223	58
0.5		**12**	470	10.2	51	0.43	3.3	2.0	1.7	1.6					—	3000					3000					3000		
4	**BN 132M**	**2**	2920	13.1	75	0.89	8.6	5.9	2.4	2.3	270	53	**FD 56**	37	—	400	280	66	**AFD 06**	37	400	280	65	**FA 06**	37	400	280	67
0.7		**12**	460	14.5	53	0.44	4.3	1.9	1.7	1.6					—	2800					2800					2800		

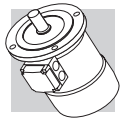

4/6P — 1500/1000 min^{-1} - S1 — 50 Hz

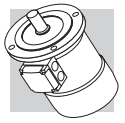

													d.c. brake						c.c. brake with fixed air gap						a.c. brake					
													FD						AFD						FA					
P_n		n	M_n	η	cosφ	In 400V	Is / In	Ms / Mn	Ma / Mn	J_m x 10^{-4}	IM B5		Mod	Mb	Z_o 1/h		J_m x 10^{-4}	IM B5	Mod	Mb	Z_o 1/h	J_m x 10^{-4}	IM B5		Mod	Mb	Z_o 1/h	J_m x 10^{-4}	IM B5	
kW		min^{-1}	Nm	%		A				kgm^2	Kg			Nm	NB	SB	kgm^2	Kg		Nm	SB	kgm^2	Kg			Nm		kgm^2	Kg	
0.22	**BN 71B**	**4**	1410	1.5	64	0.74	0.67	3.9	1.8	1.9	9.1	7.3	**FD 03**	3.5	2500	3500	10.2	10.0	**AFD 03**	5	3500	10.2	9.7		**FA 03**	3.5	3500	10.2	9.7	
0.13		**6**	920	1.4	43	0.67	0.65	2.3	1.6	1.7					5000	9000					9000						9000			
0.30	**BN 80A**	**4**	1410	2.0	61	0.82	0.87	3.5	1.3	1.5	15	8.2	**FD 04**	5.0	2500	3100	16.6	12.1	**AFD 04**	5	3100	16.6	11.7		**FA 04**	5.0	3100	16.6	12.0	
0.20		**6**	930	2.1	54	0.66	0.81	3.2	1.9	2.0					4000	6000					6000						6000			
0.40	**BN 80B**	**4**	1430	2.7	63	0.75	1.22	3.9	1.8	1.8	20	9.9	**FD 04**	10	1800	2300	22	13.8	**AFD 04**	10	2300	22	13.4		**FA 04**	10	2300	22	13.7	
0.26		**6**	930	2.7	55	0.70	0.97	2.7	1.5	1.6					3600	5500					5500						5500			
0.55	**BN 90S**	**4**	1420	3.7	70	0.78	1.45	4.5	2.0	1.9	21	12.2	**FD 14**	10	1500	2100	23	16.1	**AFD 14**	10	2100	23	15.7		**FA 14**	10	2100	23	16.3	
0.33		**6**	930	3.4	62	0.70	1.10	3.7	2.3	2.0					2500	4100					4100						4100			
0.75	**BN 90L**	**4**	1420	5.0	74	0.78	1.88	4.3	1.9	1.8	28	14	**FD 05**	13	1400	2000	32	20	**AFD 05**	13	2000	32	19.4		**FA 05**	13	2000	32	21	
0.45		**6**	920	4.7	66	0.71	1.39	3.3	2.0	1.9					2300	3600					3600						3600			
1.1	**BN 100LA**	**4**	1450	7.2	74	0.79	2.72	5.0	1.7	1.9	82	22	**FD 15**	26	1400	2000	86	28	**AFD 15**	26	2000	86	27		**FA 15**	26	2000	86	29	
0.8		**6**	950	8.0	65	0.69	2.57	4.1	1.9	2.1					2100	3300					3300						3300			
1.5	**BN 100LB**	**4**	1450	9.9	75	0.79	3.65	5.1	1.7	1.9	95	25	**FD 15**	26	1300	1800	99	31	**AFD 15**	26	1800	99	30		**FA 15**	26	1800	99	32	
1.1		**6**	950	11.1	72	0.68	3.24	4.3	2.0	2.1					2000	3000					3000						3000			
2.3	**BN 112M**	**4**	1450	15.2	75	0.78	5.7	5.2	1.8	1.9	168	32	**FD 06S**	40	—	1600	177	42	**AFD 06S**	40	1600	177	41		**FA 06S**	40	1600	177	44	
1.5		**6**	960	14.9	73	0.72	4.1	4.9	2.0	2.0					—	2400					2400						2400			
3.1	**BN 132S**	**4**	1460	20	83	0.83	6.5	5.9	2.1	2.0	213	44	**FD 56**	37	—	1200	223	57	**AFD 06**	62	1200	223	56		**FA 06**	37	1200	223	58	
2		**6**	960	20	77	0.75	4.9	4.5	2.1	2.1					—	1900					1900						1900			
4.2	**BN 132MA**	**4**	1460	27	84	0.82	8.8	5.9	2.1	2.2	270	53	**FD 06**	50	—	900	280	66	**AFD 06**	62	900	280	65		**FA 06**	50	900	280	67	
2.6		**6**	960	26	79	0.72	6.6	4.3	2.0	2.0					—	1500					1500						1500			

4/8P — 1500/750 min^{-1} - S1 — 50 Hz

													d.c. brake						c.c. brake with fixed air gap						a.c. brake				
													FD						AFD						FA				
P_n kW			n min^{-1}	M_n Nm	η %	cosφ	In 400V A	Is/In	Ms/Mn	Ma/Mn	J_m x 10^{-4} kgm^2	IM B5 Kg	Mod	Mb Nm	Z_o 1/h NB	Z_o 1/h SB	J_m x 10^{-4} kgm^2	IM B5 Kg	Mod	Mb Nm	Z_o 1/h SB	J_m x 10^{-4} kgm^2	IM B5 Kg	Mod	Mb Nm	Z_o 1/h	J_m x 10^{-4} kgm^2	IM B5 Kg
0.37	**BN 80A**	**4**	1400	2.5	63	0.82	1.03	3.3	1.4	1.4	15	8.2	**FD 04**	10	2300	3500	16.6	12.1	**AFD 04**	10	3500	16.6	11.7	**FA 04**	10	3500	16.6	12.0
0.18		**8**	690	2.5	44	0.60	0.98	2.2	1.5	1.6					4500	7000					7000					7000		
0.55	**BN 80B**	**4**	1390	3.8	65	0.86	1.42	3.8	1.7	1.6	20	9.9	**FD 04**	10	2200	2900	22	13.8	**AFD 04**	10	2900	22	13.4	**FA 04**	10	2900	22	13.7
0.30		**8**	670	4.3	49	0.65	1.36	2.3	1.7	1.8					4200	6500					6500					6500		
0.65	**BN 90S**	**4**	1390	4.5	73	0.85	1.51	4.0	1.9	1.9	28	13.6	**FD 14**	15	2300	2800	30	17.8	**AFD 14**	15	2800	30	17.4	**FA 14**	15	2800	30	17.7
0.35		**8**	690	4.8	49	0.57	1.81	2.5	2.1	2.2					3500	6000					6000					6000		
0.9	**BN 90L**	**4**	1370	6.3	73	0.87	2.05	3.8	1.8	1.8	30	15.1	**FD 05**	26	1700	2100	34	21	**AFD 05**	26	2100	34	20.4	**FA 05**	26	2100	34	22
0.5		**8**	670	7.1	57	0.62	2.04	2.4	2.1	2.0					2500	4200					4200					4200		
1.30	**BN 100LA**	**4**	1420	8.7	72	0.83	3.14	4.3	1.7	1.8	82	22	**FD 15**	40	1300	1700	86	28	**AFD 15**	40	1700	86	27	**FA 15**	40	1700	86	29
0.70		**8**	700	9.6	58	0.64	2.72	2.8	1.8	1.8					2000	3400					3400					3400		
1.8	**BN 100LB**	**4**	1420	12.1	69	0.87	4.3	4.2	1.6	1.7	95	25	**FD 15**	40	1200	1700	99	31	**AFD 15**	40	1700	99	30	**FA 15**	40	1700	99	32
0.9		**8**	700	12.3	62	0.63	3.3	3.2	1.7	1.8					1600	2600					2600					2600		
2.2	**BN 112M**	**4**	1440	14.6	77	0.85	4.9	5.3	1.8	1.8	168	32	**FD 06S**	60	—	1200	177	42	**AFD 06S**	60	1200	177	41	**FA 06S**	60	1200	177	43
1.2		**8**	710	16.1	70	0.63	3.9	3.3	1.9	1.8					—	2000					2000					2000		
3.6	**BN 132S**	**4**	1440	24	80	0.82	7.9	6.5	2.1	1.9	295	45	**FD 56**	75	—	1000	305	58	**AFD 06**	75	1000	305	57	**FA 06**	75	1000	305	59
1.8		**8**	720	24	72	0.55	6.6	4.6	1.9	2.0					—	1400					1400					1400		
4.6	**BN 132M**	**4**	1450	30	81	0.83	9.9	6.5	2.2	1.9	383	56	**FD 06**	100	—	1000	393	69	**AFD 06**	100	1000	393	68	**FA 07**	100	1000	406	74
2.3		**8**	720	31	73	0.54	8.4	4.4	2.3	2.0					—	1300					1300					1300		

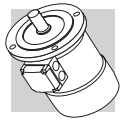

2P — 3000 min^{-1} - S1 — 50 Hz

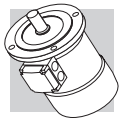

															d.c. brake						c.c. brake with fixed air gap					a.c. brake				
															FD						AFD					FA				
P_n		n	M_n	IE1	η (100%)	η (75%)	η (50%)	cosφ	In 400V	Is / In	Ms / Mn	Ma / Mn	J_m x 10^{-4}	IM B5	Mod	Mb	Z_o 1/h		J_m x 10^{-4}	IM B5	Mod	Mb	Z_o 1/h	J_m x 10^{-4}	IM B5	Mod	Mb	Z_o 1/h	J_m x 10^{-4}	IM B5
kW		min^{-1}	Nm		%	%	%		A				kgm^2	Kg		Nm	NB	SB	kgm^2	Kg		Nm	SB	kgm^2	Kg		Nm		kgm^2	Kg
0.18	**M 05A 2**	2730	0.63	○	59.9	56.9	51.9	0.77	0.56	3.0	2.1	2.0	2.0	3.2	**FD 02**	1.75	3900	4800	2.6	4.9	**AFD 02**	1.75	4800	2.6	4.7	**FA 02**	1.75	4800	2.6	4.7
0.25	**M 05B 2**	2740	0.87	○	66.0	64.8	64.8	0.76	0.72	3.3	2.3	2.3	2.3	3.6	**FD 02**	1.75	3900	4800	3.0	5.3	**AFD 02**	1.75	4800	3.0	5.1	**FA 02**	1.75	4800	3.0	5.1
0.37	**M 05C 2**	2800	1.26	○	69.1	66.8	66.8	0.78	0.99	3.9	2.6	2.6	3.3	4.8	**FD 02**	3.5	3600	4500	3.9	6.5	**AFD 02**	3.5	4500	3.9	6.3	**FA 02**	3.5	4500	3.9	6.3
0.55	**M 1SD 2**	2820	1.86	○	76.0	75.8	74.8	0.76	1.37	5.0	2.9	2.8	4.1	5.8	**FD 03**	5	2900	4200	5.3	8.5	**AFD 03**	5	4200	5.3	8.2	**FA 03**	5	4200	5.3	8.2
0.75	**M 1LA 2**	2810	2.6	○	76.6	76.2	76.2	0.76	1.86	5.1	3.1	2.8	5.0	6.9	**FD 03**	5	1900	3300	6.1	9.6	**AFD 03**	7.5	3300	6.1	9.3	**FA 03**	5	3300	6.1	9.3
1.1	**M 2SA 2**	2800	3.8	•	76.4	76.2	75.0	0.81	2.57	4.8	2.8	2.4	9.0	8.8	**FD 04**	10	1500	3000	10.6	11.9	**AFD 04**	10	3000	10.6	11.5	**FA 04**	10	3000	10.6	12.6
1.5	**M 2SB 2**	2800	5.1	•	79.1	79.5	77.2	0.81	3.4	4.9	2.7	2.4	11.4	10.6	**FD 04**	15	1300	2600	13.0	9.9	**AFD 04**	15	2600	13.0	9.5	**FA 04**	15	2600	13.0	14.4
2.2	**M 3SA 2**	2880	7.3	•	82.7	82.1	81.0	0.80	4.8	6.3	2.9	2.7	24	15.5	**FD 15**	26	1100	2400	28	22	**AFD 15**	26	2400	28	21.4	**FA 15**	26	2400	28	23
3	**M 3LA 2**	2860	10.0	•	81.5	81.3	77.4	0.79	6.7	5.6	2.6	2.2	31	18.7	**FD 15**	26	700	1600	35	25	**AFD 15**	26	1600	35	24.4	**FA 15**	26	1600	35	26
4	**M 3LB 2**	2870	13.3	•	83.1	83.0	77.8	0.80	8.7	5.8	2.7	2.5	39	22	**FD 15**	40	450	900	43	28	**AFD 15**	40	900	43	27	**FA 15**	40	900	43	29
5.5	**M 4SA 2**	2890	18.2	•	84.7	84.5	81.2	0.84	11.2	5.9	2.6	2.2	101	33	**FD 06**	50	—	600	112	46	**AFD 06**	62	600	112	45	**FA 06**	50	600	112	47
7.5	**M 4SB 2**	2900	25	•	86.5	86.3	84.4	0.85	14.7	6.4	2.6	2.2	145	40	**FD 06**	50	—	550	154	53	**AFD 06**	62	550	154	52	**FA 06**	50	550	154	54
9.2	**M 4LA 2**	2930	30	•	87.0	86.5	83.6	0.86	17.7	6.7	2.8	2.3	178	51	**FD 56**	75	—	430	189	64	**AFD 06**	75	430	189	63	**FA 06**	75	430	189	65
11	**M 4LC 2**	2920	36	•	87.6	87.0	86.0	0.88	20.6	6.9	2.9	2.5	210	60																
15	**M 5SB 2**	2930	49	•	89.6	89.4	88.0	0.86	28.1	7.1	2.6	2.3	340	70																
18.5	**M 5SC 2**	2930	60	•	90.4	90.1	89.0	0.86	34	7.6	2.7	2.3	420	83																
22	**M 5LA 2**	2930	72	•	89.9	89.7	89.5	0.88	40	7.8	2.6	2.4	490	95																

○ = n.a. • = IE1

4P — 1500 min^{-1} - S1 — 50 Hz

															d.c. brake						c.c. brake with fixed air gap						a.c. brake				
															FD						AFD						FA				
P_n		n	M_n	IE1	η (100%)	η (75%)	η (50%)	cosφ	In 400V	Is / In	Ms / Mn	Ma / Mn	J_m x 10^{-4}	IM B5	Mod	Mb	Z_o 1/h		J_m x 10^{-4}	IM B5	Mod	Mb	Z_o 1/h	J_m x 10^{-4}	IM B5	Mod	Mb	Z_o 1/h	J_m x 10^{-4}	IM B5
kW		min^{-1}	Nm		%	%	%		A				kgm^2	Kg		Nm	NB	SB	kgm^2	Kg		Nm	SB	kgm^2	Kg		Nm		kgm^2	Kg
0.09	**M 0B 4**	1350	0.64	○	51.7	47.6	42.9	0.60	0.42	2.6	2.5	2.4	1.5	2.9																	
0.12	**M 05A 4**	1350	0.85	○	59.8	56.2	47.0	0.62	0.47	2.6	1.9	1.8	2.0	3.2	**FD 02**	1.75	10000	13000	2.6	4.9	**AFD 02**	1.75	13000	2.6	4.7	**FA 02**	1.75	13000	2.6	4.7
0.18	**M 05B 4**	1320	1.30	○	54.8	52.9	52.5	0.67	0.71	2.6	2.2	2.0	2.3	3.6	**FD 02**	3.5	10000	13000	3.0	5.3	**AFD 02**	3.5	13000	3.0	5.1	**FA 02**	3.5	13000	3.0	5.1
0.25	**M 05C 4**	1340	1.78	○	65.3	65.0	57.9	0.69	0.80	2.7	2.1	1.9	3.3	4.8	**FD 02**	3.5	7800	10000	3.9	6.5	**AFD 02**	3.5	10000	3.9	6.3	**FA 02**	3.5	10000	3.9	6.3
0.37	**M 1SD 4**	1370	2.6	○	66.8	66.7	63.0	0.76	1.05	3.7	2.0	1.9	6.9	5.5	**FD 03**	5	6000	9400	8.0	8.2	**AFD 03**	7.5	9400	8.0	7.9	**FA 03**	5	9400	8.0	7.9
0.55	**M 1LA 4**	1380	3.8	○	69.0	68.9	68.8	0.74	1.55	4.1	2.3	2.3	9.1	6.9	**FD 53**	7.5	4300	8700	10.2	9.6	**AFD 03**	7.5	8700	10.2	9.3	**FA 03**	7.5	8700	10.2	9.3
0.75	**M 2SA 4**	1400	5.1	•	75.0	74.5	69.3	0.78	1.85	4.9	2.7	2.5	20	9.2	**FD 04**	15	4100	7800	22	13.1	**AFD 04**	15	7800	22	12.7	**FA 04**	15	7800	22	13.0
1.1	**M 2SB 4**	1400	7.5	•	76.4	76.2	70.4	0.78	2.66	5.1	2.8	2.5	25	10.6	**FD 04**	15	2600	5300	27	14.5	**AFD 04**	15	5300	27	14.1	**FA 04**	15	5300	27	14.4
1.5	**M 3SA 4**	1410	10.2	•	79.6	80.5	79.3	0.77	3.5	4.6	2.1	2.1	34	15.5	**FD 15**	26	2800	4900	38	22	**AFD 15**	26	4900	38	21.4	**FA 15**	26	4900	38	23
2.2	**M 3LA 4**	1410	14.9	•	81.1	81.4	79.9	0.75	5.2	4.5	2.2	2.0	40	17	**FD 15**	40	2600	4700	44	24	**AFD 15**	40	4700	44	23.4	**FA 15**	40	4700	44	24
3	**M 3LB 4**	1410	20	•	82.6	83.8	83.7	0.77	6.8	5.0	2.3	2.2	54	21	**FD 15**	40	2400	4400	58	27	**AFD 15**	40	4400	58	26	**FA 15**	40	4400	58	28
4	**M 3LC 4**	1400	27	○	82.7	83.1	80.5	0.78	9.0	4.7	2.3	2.2	61	23	**FD 55**	55	—	1300	65	29	**—**	—	—	—	—	**FA 15**	40	1300	65	30
5.5	**M 4SA 4**	1440	36	•	84.7	84.8	82.5	0.81	11.6	5.5	2.3	2.2	213	42	**FD 56**	75	—	1050	223	55	**AFD 06**	75	1050	223	54	**FA 06**	75	1050	223	56
7.5	**M 4LA 4**	1440	50	•	86.0	86.3	85.3	0.81	15.5	5.7	2.5	2.4	270	51	**FD 06**	100	—	950	280	64	**AFD 06**	100	950	280	63	**FA 07**	100	950	280	65
9.2	**M 4LB 4**	1440	61	•	88.4	88.6	87.5	0.81	18.8	5.9	2.7	2.5	319	57	**FD 07**	150	—	900	342	73	**AFD 07**	150	900	342	71	**FA 07**	150	900	342	75
11	**M 4LC 4**	1440	73	•	87.6	87.8	86.0	0.81	22.4	6.0	2.7	2.5	360	65	**FD 07**	150	—	850	382	81	**AFD 07**	150	850	382	79	**FA 07**	150	850	382	83
15	**M 5SB 4**	1460	98	•	88.7	88.5	88.4	0.81	30.1	6.0	2.3	2.1	650	85	**FD 08**	200	—	750	725	115						**FA 08**	200	750	710	114
18.5	**M 5LA 4**	1460	121	•	89.3	89.5	89.2	0.81	37	6.2	2.6	2.5	790	101	**FD 08**	250	—	700	865	131						**FA 08**	250	700	850	130

○ = n.a. • = IE1

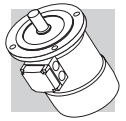

6P — 1000 min^{-1} - S1 — 50 Hz

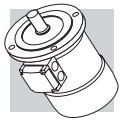

															d.c. brake						c.c. brake with fixed air gap						a.c. brake				
															FD						AFD						FA				
P_n		n	M_n	IE1	η (100%)	η (75%)	η (50%)	cosφ	In 400V	Is / In	Ms / Mn	Ma / Mn	J_m x 10^{-4}	IM B5	Mod	Mb	Z_o 1/h		J_m x 10^{-4}	IM B5	Mod	Mb	Z_o 1/h	J_m x 10^{-4}	IM B5	Mod	Mb	Z_o 1/h	J_m x 10^{-4}	IM B5
kW		min^{-1}	Nm		%	%	%		A				kgm^2	Kg		Nm	NB	SB	kgm^2	Kg		Nm	SB	kgm^2	Kg		Nm		kgm^2	Kg
0.09	**M 05A 6**	880	0.98	○	41.0	41.0	32.9	0.53	0.60	2.1	2.1	1.8	3.4	4.3	**FD 02**	3.5	9000	14000	4.0	6.0	**AFD 02**	3.5	14000	4.0	5.8	**FA 02**	3.5	14000	4.0	5.8
0.12	**M 05B 6**	870	1.32	○	45.0	44.0	41.8	0.60	0.64	2.1	1.9	1.7	3.7	4.6	**FD 02**	3.5	9000	14000	4.3	6.3	**AFD 02**	3.5	14000	4.3	6.1	**FA 02**	3.5	14000	4.3	6.1
0.18	**M 1SC 6**	900	1.91	○	55.0	55.5	51.0	0.69	0.68	2.6	1.9	1.7	8.4	5.1	**FD 03**	5	8100	13500	9.5	7.8	**AFD 03**	5	13500	9.5	7.5	**FA 03**	5	13500	9.5	7.5
0.25	**M 1SD 6**	900	2.7	○	62.0	58.5	51.4	0.71	0.82	2.6	1.9	1.7	10.9	6.3	**FD 03**	5	7800	13000	12	9.0	**AFD 03**	7.5	13000	12	8.7	**FA 03**	5	13000	12	8.7
0.37	**M 1LA 6**	910	3.9	○	66.0	60.0	53.3	0.69	1.17	3.0	2.4	2.0	12.9	7.3	**FD 53**	7.5	5100	9500	14	10.0	**AFD 03**	7.5	9500	14	9.7	**FA 03**	7.5	9500	14	9.7
0.55	**M 2SA 6**	920	5.7	○	70.0	69.8	64.3	0.68	1.67	3.9	2.6	2.2	25	10.6	**FD 04**	15	4800	7200	27	14.5	**AFD 04**	15	7200	27	14.1	**FA 04**	15	7200	27	14.4
0.75	**M 2SB 6**	920	7.8	•	70.0	70.0	64.4	0.65	2.38	3.8	2.5	2.2	28	11.5	**FD 04**	15	3400	6400	30	15.4	**AFD 04**	15	6400	30	15	**FA 04**	15	6400	30	15.3
1.1	**M 3SA 6**	920	11.4	•	75.0	74.0	72.0	0.72	2.9	4.3	2.0	1.8	33	17	**FD 15**	26	2700	5000	37	23	**AFD 15**	26	5000	37	22.4	**FA 15**	26	5000	37	24
1.5	**M 3LA 6**	940	15.2	•	75.2	74.2	70.3	0.72	4.0	4.1	2.1	2.0	82	21	**FD 15**	40	1900	4100	86	27	**AFD 15**	40	4100	86	26	**FA 15**	40	4100	86	28
1.85	**M 3LB 6**	930	19.0	•	76.6	72.8	62.6	0.73	4.8	4.6	2.1	2.0	95	23	**FD 15**	40	1700	3600	99	29	**AFD 15**	40	3600	99	28	**FA 15**	40	3600	99	30
2.2	**M 3LC 6**	930	23	•	77.7	76.8	72.4	0.71	5.8	4.7	2.3	2.1	95	23	**FD 55**	55	—	1900	99	29	**—**	—	—	—	—	**FA 15**	55	1900	99	30
3	**M 4SA 6**	940	30	•	79.7	77.0	75.1	0.76	7.1	5.1	1.9	1.8	216	34	**FD 56**	75	—	1400	226	47	**AFD 06**	75	1400	226	46	**FA 06**	75	1400	226	48
4	**M 4LA 6**	950	40	•	81.4	81.5	79.5	0.77	9.2	5.5	2.0	1.8	295	43	**FD 06**	100	—	1200	305	56	**AFD 06**	100	1200	305	55	**FA 07**	100	1200	305	57
5.5	**M 4LB 6**	945	56	•	83.1	80.9	79.1	0.78	12.2	6.1	2.1	1.9	383	54	**FD 07**	150	—	1050	406	70	**AFD 07**	150	1050	406	68	**FA 07**	150	1050	406	72
7.5	**M 5SA 6**	955	75	•	85.0	85.0	84.8	0.81	15.7	5.9	2.2	2.0	740	69	**FD 08**	170	—	900	815	98						**FA 08**	170	900	800	98
11	**M 5SB 6**	960	109	•	86.4	86.5	85.9	0.81	22.7	6.6	2.5	2.3	970	89	**FD 08**	200	—	800	1045	119						**FA 08**	200	800	1030	118

○ = n.a. • = IE1

2/4P — 3000/1500 min^{-1} - S1 — 50 Hz

												d.c. brake						c.c. brake with fixed air gap					a.c. brake				
												FD						AFD					FA				
P_n kW		n min^{-1}	M_n Nm	η %	cosφ	In 400V A	Is / In	Ms / Mn	Ma / Mn	J_m x 10^{-4} kgm^2	IM B5 Kg	Mod	Mb Nm	Z_o 1/h NB	Z_o 1/h SB	J_m x 10^{-4} kgm^2	IM B5 Kg	Mod	Mb Nm	Z_o 1/h SB	J_m x 10^{-4} kgm^2	IM B5 Kg	Mod	Mb Nm	Z_o 1/h	J_m x 10^{-4} kgm^2	IM B5 Kg
0.20	**M 05A 2**	2700	0.71	55	0.82	0.64	3.5	2.1	1.9	2.9	4.1	**FD 02**	3.5	2200	2600	3.5	5.8	**AFD 02**	3.5	2600	3.5	5.6	**FA 02**	3.5	2600	3.5	5.6
0.15	**4**	1350	1.06	49	0.67	0.66	2.6	1.8	1.7					4000	5100					5100					5100		
0.28	**M 1SB 2**	2700	0.99	56	0.82	0.88	2.9	1.9	1.7	4.7	4.0	**FD 03**	3.5	2100	2400	5.8	6.7	**AFD 03**	5	2400	5.8	6.4	**FA 03**	3.5	2400	5.8	6.4
0.20	**4**	1370	1.39	59	0.68	1.02	3.1	1.8	1.7					3800	4800					4800					4800		
0.37	**M 1SC 2**	2740	1.29	56	0.82	1.16	3.5	1.8	1.8	5.8	4.7	**FD 03**	5	1400	2100	6.9	7.4	**AFD 03**	5	2100	6.9	7.1	**FA 03**	5	2100	6.9	7.1
0.25	**4**	1390	1.72	60	0.73	0.82	3.3	2.0	1.9					2900	4200					4200					4200		
0.45	**M 1SD 2**	2780	1.55	63	0.85	1.21	3.8	1.8	1.8	6.9	5.5	**FD 03**	5	1400	2100	8.0	8.2	**AFD 03**	5	2100	8.0	7.9	**FA 03**	5	2100	8.0	7.9
0.30	**4**	1400	2.0	63	0.74	0.93	3.8	2.1	1.9					2900	4200					4200					4200		
0.55	**M 1LA 2**	2800	1.9	73	0.79	1.38	4.2	2.0	1.8	9.1	6.9	**FD 03**	5	1600	2200	10.2	9.6	**AFD 03**	5	2200	10.2	9.3	**FA 03**	5	2200	10.2	9.3
0.37	**4**	1400	2.5	68	0.72	1.09	3.9	2.2	2.0					3300	4600					4600					4600		
0.75	**M 2SA 2**	2780	2.6	65	0.85	1.96	3.8	1.9	1.8	20	9.2	**FD 04**	10	1400	1600	22	13.1	**AFD 04**	10	1600	22	12.7	**FA 04**	10	1600	22	13.0
0.55	**4**	1400	3.8	68	0.81	1.44	3.9	1.7	1.7					2700	3600					3600					3600		
1.1	**M 2SB 2**	2730	3.9	65	0.86	2.84	3.9	2.0	1.9	25	10.7	**FD 04**	10	1200	1500	27	14.5	**AFD 04**	10	1500	27	14.1	**FA 04**	10	1500	27	14.5
0.75	**4**	1410	5.1	75	0.81	1.78	4.5	2.1	2.0					2300	3100					3100					3100		
1.5	**M 3SA 2**	2830	5.1	74	0.83	3.5	4.7	2.1	2.0	34	15.5	**FD 15**	26	700	1000	38	22	**AFD 15**	26	1000	38	21.4	**FA 15**	26	1000	38	23
1.1	**4**	1420	7.4	77	0.78	2.6	4.3	2.1	2.0					1600	2600					2600					2600		
2.2	**M 3LA 2**	2800	7.5	72	0.85	5.2	4.5	2.0	1.9	40	17	**FD 15**	26	600	900	44	24	**AFD 15**	26	900	44	23.4	**FA 15**	26	900	44	24
1.5	**4**	1410	10.2	73	0.79	3.8	4.7	2.0	2.0					1300	2300					2300					2300		
3.5	**M 3LB 2**	2850	11.7	80	0.84	7.5	5.4	2.2	2.1	61	23	**FD 15**	40	500	900	65	29	**AFD 15**	40	900	65	28	**FA 15**	40	900	65	30
2.5	**4**	1420	16.8	82	0.80	5.5	5.2	2.2	2.2					1000	2100					2100					2100		
4.8	**M 4 SA 2**	2900	15.8	81	0.88	9.7	6.0	2.0	1.9	213	42	**FD 06**	50	—	400	233	55	**AFD 06**	62	400	233	54	**FA 06**	50	400	233	56
3.8	**4**	1430	25.4	81	0.84	8.1	5.2	2.1	2.1					—	950					950					950		
5.5	**M 4SB 2**	2890	18.2	80	0.87	11.4	5.9	2.4	2.0	213	42	**FD 56**	75	—	350	223	55	**AFD 06**	75	350	223	54	**FA 06**	75	350	223	56
4.4	**4**	1440	29	82	0.84	9.2	5.3	2.2	2.0					—	900					900					900		
7.5	**M 4LA 2**	2900	25	82	0.87	15.2	6.5	2.4	2.0	270	51	**FD 06**	100	—	350	280	64	**AFD 06**	100	350	280	63	**FA 07**	100	350	280	65
6	**4**	1430	40	84	0.85	12.1	5.8	2.3	2.1					—	950					950					950		
9.2	**M 4LB 2**	2920	30	83	0.86	18.6	6.0	2.6	2.2	319	57	**FD 07**	150	—	300	342	73	**AFD 07**	150	300	342	71	**FA 07**	150	300	342	75
7.3	**4**	1440	48	85	0.85	14.6	5.5	2.3	2.1					—	800					800					800		

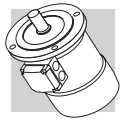

2/6P — 3000/1000 min^{-1} - S3 60/40% — 50 Hz

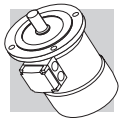

												d.c. brake						c.c. brake with fixed air gap					a.c. brake				
												FD						AFD					FA				
P_n kW		n min^{-1}	M_n Nm	η %	cosφ	In 400V A	Is / In	Ms / Mn	Ma / Mn	J_m x 10^{-4} kgm^2	IM B5 Kg	Mod	Mb Nm	Z_o 1/h NB	Z_o 1/h SB	J_m x 10^{-4} kgm^2	IM B5 Kg	Mod	Mb Nm	Z_o 1/h SB	J_m x 10^{-4} kgm^2	IM B5 Kg	Mod	Mb Nm	Z_o 1/h	J_m x 10^{-4} kgm^2	IM B5 Kg
0.25	M 1SA 2	2850	0.84	60	0.82	0.73	4.3	1.9	1.8	6.9	5.5	FD 03	1.75	1500	1700	8.0	8.2	AFD 03	2.5	1700	8.0	7.9	FA 03	1.75	1700	8.0	7.9
0.08	6	910	0.84	43	0.70	0.38	2.1	1.4	1.5					10000	13000					13000					13000		
0.37	M 1LA 2	2880	1.23	62	0.80	1.08	4.4	1.9	1.8	9.1	6.9	FD 03	3.5	1000	1300	10.2	9.6	AFD 03	5	1300	10.2	9.3	FA 03	3.5	1300	10.2	9.3
0.12	6	900	1.27	44	0.73	0.54	2.4	1.4	1.5					9000	11000					11000					11000		
0.55	M 2SA 2	2800	1.88	63	0.86	1.47	4.5	1.9	1.7	20	9.2	FD 04	5	1500	1800	22	13.1	AFD 04	5	1800	22	12.7	FA 04	5	1800	22	13.0
0.18	6	930	1.85	52	0.65	0.77	3.3	2.0	1.9					4100	6300					6300					6300		
0.75	M 2SB 2	2800	2.6	66	0.87	1.89	4.3	1.8	1.6	25	10.6	FD 04	5	1700	1900	27	14.5	AFD 04	5	1900	27	14.1	FA 04	5	1900	27	14.4
0.25	6	930	2.6	54	0.67	1.00	3.2	1.7	1.8					3800	6000					6000					6000		
1.1	M 3SA 2	2870	3.7	71	0.82	2.73	4.9	1.8	1.9	34	15.5	FD 15	13	1000	1300	38	22	AFD 15	13	1300	38	21.4	FA 15	13	1300	38	23
0.37	6	930	3.8	63	0.70	1.21	3.1	1.5	1.8					3500	5000					5000					5000		
1.5	M 3LA 2	2880	5.0	73	0.84	3.53	5.1	1.9	2.0	40	17	FD 15	13	1000	1200	44	24	AFD 15	13	1200	44	23.4	FA 15	13	1200	44	24
0.55	6	940	5.6	64	0.67	1.85	3.5	1.7	1.8					2900	4000					4000					4000		
2.2	M 3LB 2	2900	7.2	77	0.85	4.9	5.9	2.0	2.0	61	23	FD 15	26	700	900	65	29	AFD 15	26	900	65	28	FA 15	26	900	65	30
0.75	6	950	7.5	67	0.64	2.5	3.3	1.9	1.8					2100	3000					3000					3000		
3	M 4SA 2	2910	9.9	74	0.88	6.6	5.6	2.0	2.1	170	36	FD 56	37	—	600	182	48	AFD 06	37	600	182	47	FA 06	37	600	182	50
1.1	6	960	10.9	73	0.68	3.2	4.5	2.2	2.0					—	2200					2200					2200		
4.5	M 4SB 2	2910	14.8	78	0.84	9.9	5.8	1.9	1.8	213	42	FD 56	37	—	500	223	55	AFD 06	37	500	223	54	FA 06	37	500	223	56
1.5	6	960	14.9	74	0.67	4.4	4.2	1.9	2.0					—	2100					2100					2100		
5.5	M 4LA 2	2920	18.0	78	0.87	11.7	6.2	2.1	1.9	270	51	FD 06	50	—	400	280	64	AFD 06	62	400	280	63	FA 06	50	400	280	65
2.2	6	960	22	77	0.71	5.8	4.3	2.1	2.0					—	1900					1900					1900		

2/8P — 3000/750 min^{-1} - S3 60/40% — 50 Hz

												d.c. brake						c.c. brake with fixed air gap					a.c. brake				
												FD						AFD					FA				
P_n kW		n min^{-1}	M_n Nm	η %	cosφ	In 400V A	Is / In	Ms / Mn	Ma / Mn	J_m x 10^{-4} kgm^2	IM B5 Kg	Mod	Mb Nm	Z_o 1/h NB	Z_o 1/h SB	J_m x 10^{-4} kgm^2	IM B5 Kg	Mod	Mb Nm	Z_o 1/h SB	J_m x 10^{-4} kgm^2	IM B5 Kg	Mod	Mb Nm	Z_o 1/h	J_m x 10^{-4} kgm^2	IM B5 Kg
0.37	**M 1LA 2**	2800	1.26	63	0.86	0.99	3.9	1.8	1.9	12.9	7.3	**FD 03**	3.5	1200	1300	14	10.0	**AFD 03**	5	1300	14	9.7	**FA 03**	3.5	1300	14	9.7
0.09	**8**	670	1.28	34	0.75	0.51	1.8	1.4	1.5					9500	13000					13000					13000		
0.55	**M 2SA 2**	2830	1.86	66	0.86	1.40	4.4	2.1	2.0	20	9.2	**FD 04**	5	1500	1800	22	13.1	**AFD 04**	5	1800	22	12.7	**FA 04**	5	1800	22	13.0
0.13	**8**	690	1.80	41	0.64	0.72	2.3	1.6	1.7					5600	8000					8000					8000		
0.75	**M 2SB 2**	2800	2.6	68	0.88	1.81	4.6	2.1	2.0	25	10.6	**FD 04**	10	1700	1900	27	14.5	**AFD 04**	10	1900	27	14.1	**FA 04**	10	1900	27	14.4
0.18	**8**	690	2.5	43	0.66	0.92	2.3	1.6	1.7					4800	7300					7300					7300		
1.1	**M 3SA 2**	2870	3.7	69	0.84	2.74	4.6	1.8	1.7	34	15.5	**FD 15**	13	1000	1300	38	22	**AFD 15**	13	1300	38	21.4	**FA 15**	13	1300	38	23
0.28	**8**	690	3.9	44	0.56	1.64	2.3	1.4	1.7					3400	5000					5000					5000		
1.5	**M 3LA 2**	2880	5.0	69	0.85	3.69	4.7	1.9	1.8	40	17	**FD 15**	13	1000	1200	44	24	**AFD 15**	13	1200	44	23.4	**FA 15**	13	1200	44	24
0.37	**8**	690	5.1	46	0.63	1.84	2.1	1.6	1.6					3300	5000					5000					5000		
2.4	**M 3LB 2**	2900	7.9	75	0.82	5.6	5.4	2.1	2.0	61	23	**FD 15**	26	550	700	65	29	**AFD 15**	26	700	65	28	**FA 15**	26	700	65	30
0.55	**8**	700	7.5	54	0.58	2.5	2.6	1.8	1.8					2000	3500					3500					3500		
3	**M 4SA 2**	2920	9.8	72	0.85	7.1	5.6	2.0	1.8	162	36	**FD 56**	37	—	600	182	48	**AFD 06**	37	600	182	47	**FA 06**	37	600	182	50
0.75	**8**	710	10.1	61	0.64	2.8	3.0	1.7	1.8					—	3400					3400					3400		
4	**M 4SB 2**	2870	13.3	73	0.84	9.4	5.6	2.3	2.4	213	42	**FD 56**	37	—	500	223	55	**AFD 06**	37	500	223	54	**FA 06**	37	500	223	56
1	**8**	690	13.8	66	0.62	3.5	2.9	1.9	1.8					—	3500					3500					3500		
5.5	**M 4LA 2**	2870	18.3	75	0.84	12.6	6.1	2.4	2.5	270	51	**FD 06**	50	—	400	280	64	**AFD 06**	62	400	280	63	**FA 06**	50	400	280	65
1.5	**8**	690	21	68	0.63	5.1	2.9	1.9	1.9					—	2400					2400					2400		

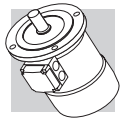

2/12P — 3000/500 min^{-1} - S3 60/40% — 50 Hz

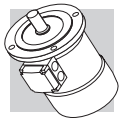

												d.c. brake						c.c. brake with fixed air gap					a.c. brake				
												FD						AFD					FA				
P_n kW		n min^{-1}	M_n Nm	η %	cosφ	In 400V A	$\frac{Is}{In}$	$\frac{Ms}{Mn}$	$\frac{Ma}{Mn}$	J_m x 10^{-4} kgm^2	IM B5 Kg	Mod	Mb Nm	Z_o 1/h NB	Z_o 1/h SB	J_m x 10^{-4} kgm^2	IM B5 Kg	Mod	Mb Nm	Z_o 1/h SB	J_m x 10^{-4} kgm^2	IM B5 Kg	Mod	Mb Nm	Z_o 1/h	J_m x 10^{-4} kgm^2	IM B5 Kg
0.55	**M 2SA 2**	2820	1.86	64	0.89	1.39	4.2	1.6	1.7	25	10.6	**FD 04**	5	1000	1300	27	14.5	**AFD 04**	5	1300	27	14.1	**FA 04**	5	1300	27	14.4
0.09	**12**	430	2.0	30	0.63	0.69	1.8	1.9	1.8					8000	12000					12000					12000		
0.75	**M 3SA 2**	2900	2.5	65	0.81	2.06	5.2	1.9	2.1	34	15.5	**FD 15**	13	700	900	38	22	**AFD 15**	13	900	38	21.4	**FA 15**	13	900	38	23
0.12	**12**	460	2.5	33	0.43	1.22	1.9	1.3	1.6					5000	7000					7000					7000		
1.1	**M 3LA 2**	2850	3.7	65	0.85	2.87	4.5	1.6	1.8	40	17	**FD 15**	13	700	900	44	24	**AFD 15**	13	900	44	23.4	**FA 15**	13	900	44	24
0.18	**12**	430	4.0	26	0.54	1.85	1.5	1.3	1.5					4000	6000					6000					6000		
1.5	**M 3LB 2**	2900	4.9	67	0.86	3.76	5.6	1.9	1.9	54	21	**FD 15**	13	700	900	58	27	**AFD 15**	13	900	58	26	**FA 15**	13	900	58	28
0.25	**12**	440	5.4	36	0.46	2.18	1.8	1.7	1.8					3800	5000					5000					5000		
2	**M 3LC 2**	2850	6.7	70	0.84	4.9	4.9	1.8	1.7	61	23	**FD 55**	18	—	700	65	29	**AFD 15**	26	700	65	28	**FA 15**	18	700	65	30
0.3	**12**	450	6.4	38	0.47	2.4	1.7	1.6	1.7					—	3500					3500					3500		
3	**M 4SA 2**	2920	9.8	74	0.87	6.7	6.8	2.3	1.9	213	42	**FD 56**	37	—	450	223	55	**AFD 06**	37	450	223	54	**FA 06**	37	450	223	56
0.5	**12**	470	10.2	51	0.43	3.3	2.0	1.7	1.6					—	3000					3000					3000		
4	**M 4LA 2**	2920	13.1	75	0.89	8.6	5.9	2.4	2.3	270	51	**FD 56**	37	—	400	280	64	**AFD 06**	37	400	280	63	**FA 06**	37	400	280	65
0.7	**12**	460	14.5	53	0.44	4.3	1.9	1.7	1.6					—	2800					2800					2800		

BN - IM B5

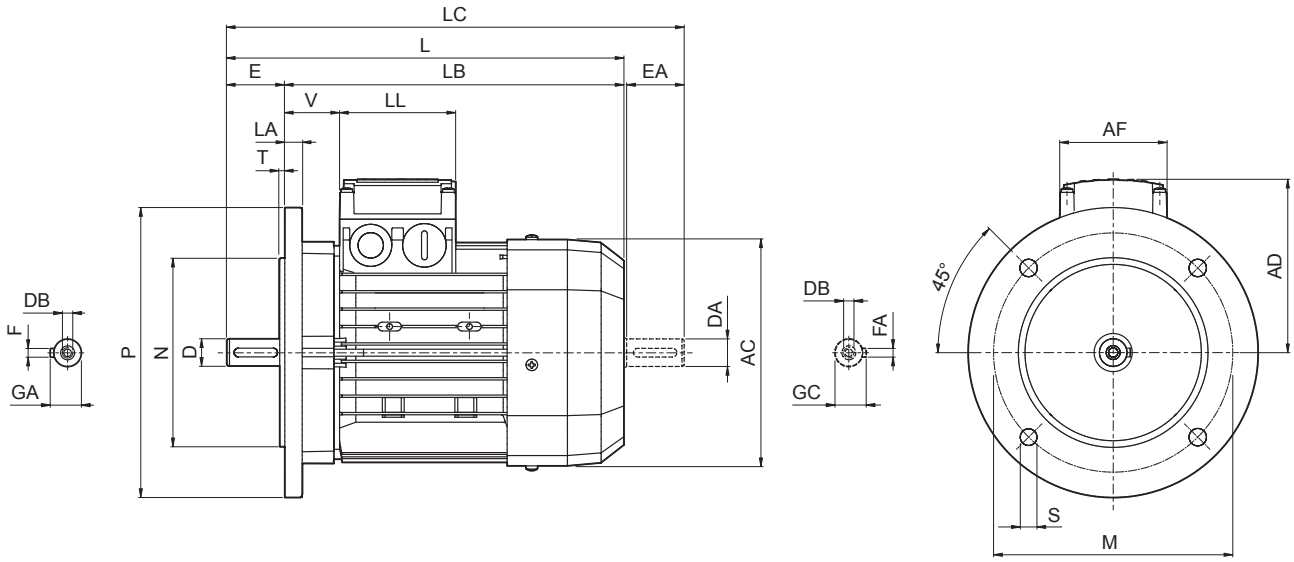

	Shaft					Flange						Motor							
	D DA	**E EA**	**DB**	**GA GC**	**F FA**	**M**	**N**	**P**	**S**	**T**	**LA**	**AC**	**L**	**LB**	**LC**	**AD**	**AF**	**LL**	**V**
BN 56	9	20	M3	10.2	3	100	80	120	7	3	8	110	185	165	207	91	74	80	34
BN 63	11	23	M4	12.5	4	115	95	140	9.5		10	121	207	184	232	95			26
BN 71	14	30	M5	16	5	130	110	160		3.5		138	249	219	281	108			37
BN 80	19	40	M6	21.5	6	165	130	200	11.5		11.5	156	274	234	315	119			38
BN 90	24	50	M8	27	8							176	326	276	378	133	98	98	44
BN 100	28	60	M10	31		215	180	250	14	4	14	195	367	307	429	142			50
BN 112											15	219	385	325	448	157			52
BN 132	38	80	M12	41	10	265	230	300			16	258	493	413	576	193	118	118	58
BN 160 MR	42 38 (1)	110 80 (1)	M16 M12 (1)	45 41 (1)	12 10 (1)	300	250	350	18.5	5	15		562	452	645				218
BN 160 M												310	596	486	680	245	187	187	51
BN 160 L																			
BN 180 M	48 38 (1)	110 110 (1)	M16 M12 (1)	51.5 41 (1)	14 10 (1)							310	640	530	724				
BN 180 L	48 42 (1)		M16 M16 (1)	51.5 45 (1)	14 12 (1)						18	348	708	598	823	261			52
BN 200 L	55 42 (1)		M20 M16 (1)	59 45 (1)	16 12 (1)	350	300	400					722	612	837				66

NOTE:
1) These values refer to the rear shaft end.

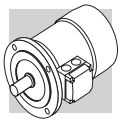

BN - IM B14

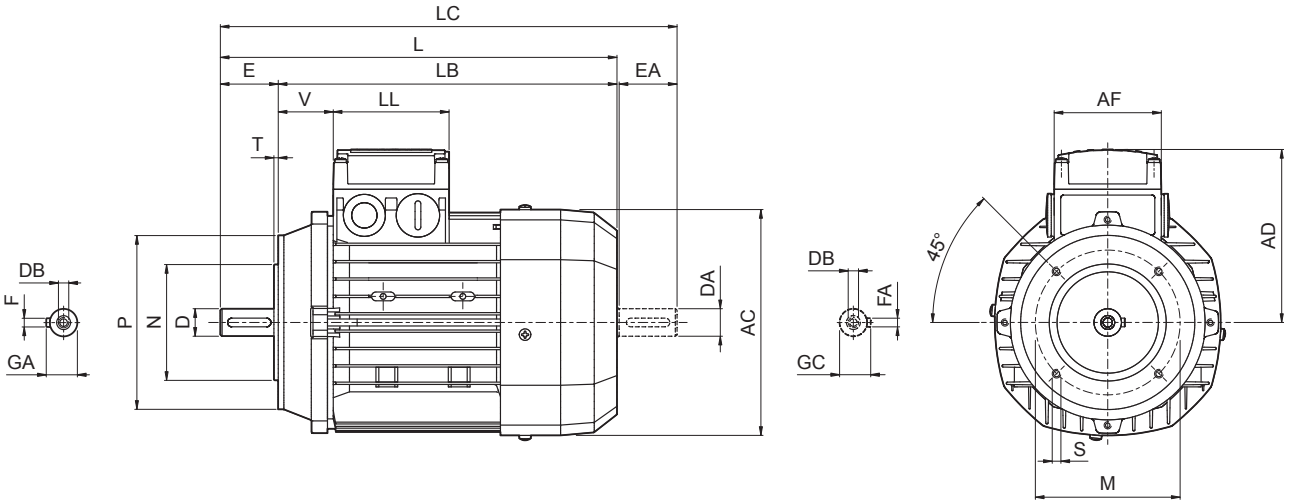

	Shaft					Flange					Motor							
	D DA	**E EA**	**DB**	**GA GC**	**F FA**	**M**	**N**	**P**	**S**	**T**	**AC**	**L**	**LB**	**LC**	**AD**	**AF**	**LL**	**V**
BN 56	9	20	M3	10.2	3	65	50	80	M5	2.5	110	185	165	207	91	74	80	34
BN 63	11	23	M4	12.5	4	75	60	90			121	207	184	232	95			26
BN 71	14	30	M5	16	5	85	70	105	M6		138	249	219	281	108			37
BN 80	19	40	M6	21.5	6	100	80	120		3	156	274	234	315	119			38
BN 90	24	50	M8	27	8	115	95	140	M8		176	326	276	378	133	98	98	44
BN 100	28	60	M10	31		130	110	160		3.5	195	367	307	429	142			50
BN 112											219	385	325	448	157			52
BN 132	38	80	M12	41	10	165	130	200	M10	4	258	493	413	576	193	118	118	58

BN_FD ; BN_AFD - IM B5

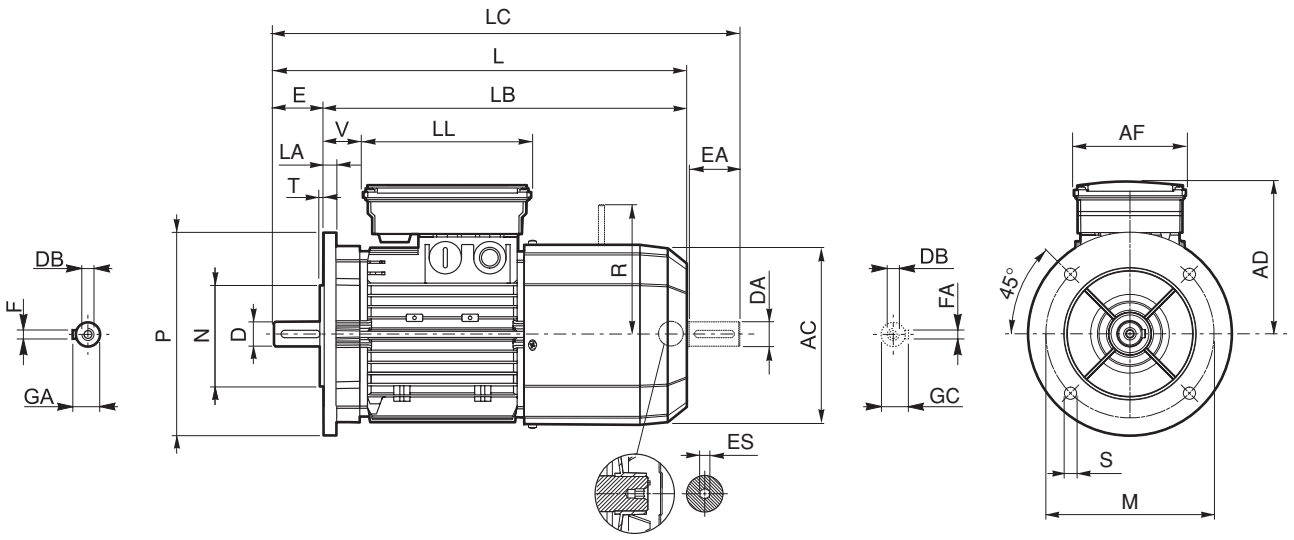

	Shaft					Flange						Motor									
	D DA	E EA	DB	GA GC	F FA	M	N	P	S	T	LA	AC	L	LB	LC	AD	AF	LL	V	R	ES
BN 63	11	23	M4	12.5	4	115	95	140	9.5	3	10	121	272	249	297	122			14	96	
BN 71	14	30	M5	16	5	130	110	160	9.5			138	310	280	342	135	98	133	25	103	5
BN 80	19	40	M6	21.5	6					3.5	11.5	156	346	306	388	146			41	129	
BN 90 S	24	50	M8	27	8	165	130	200	11.5			176	409	359	461	149	110	165	39		6
BN 90 L																146				160	
BN 100	28	60	M10	31		215	180	250	14	4	14	195	458	398	521	158		165	62		
BN 112											15	219	484	424	547	173		165	73	199	
BN 132	38	80	M12	41	10	265	230	300			20	258	603	523	686	210	140	188	46	204 (2)	
BN 160 MR	42 38 (1)	110 80 (1)	M16 M12 (1)	45 41 (1)	12 10 (1)	300	250	350	18.5	5	15		672	562	755				161	226	
BN 160 M												310	736	626	820	245	187	187	51	266	—
BN 160 L	42 38 (1)	110 80 (1)	M16 M12 (1)	45 41 (1)	12 10 (1)								780	670	864						
BN 180 M	48 38 (1)			51.5 41 (1)	14 10 (1)								866	756	981	261			52	305	
BN 180 L	48 42 (1)	110 110 (1)	M16 M16 (1)	51.5 45 (1)	14 12 (1)						18	348	878	768	993				64		
BN 200 L	55 42 (1)		M20 M16 (1)	59 45 (1)	16 12 (1)	350	300	400	18.5												

NOTE:
1) These values refer to the rear shaft end.
2) Per freno FD07 e AFD07 quota R=226.

ES hexagon is not supplied with PS option.

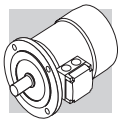

BN_FD ; BN_AFD - IM B14

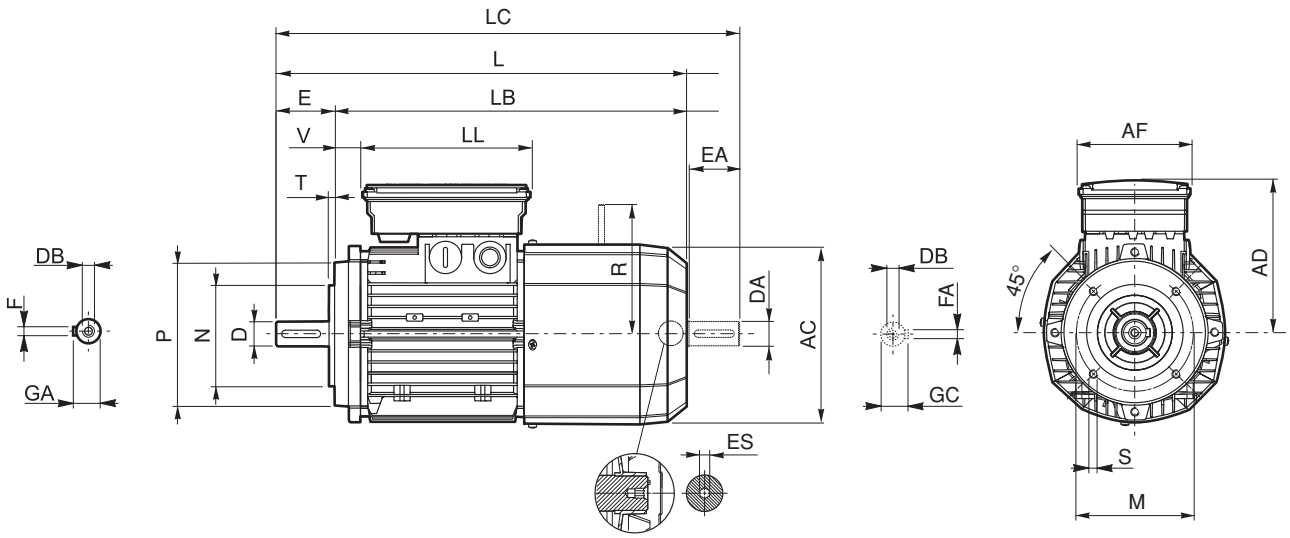

	Shaft					Flange					Motor									
	D DA	**E EA**	**DB**	**GA GC**	**F FA**	**M**	**N**	**P**	**S**	**T**	**AC**	**L**	**LB**	**LC**	**AD**	**AF**	**LL**	**V**	**R**	**ES**
BN 63	11	23	M4	12.5	4	75	60	90	M5	2.5	121	272	249	297	122	98	133	14	96	5
BN 71	14	30	M5	16	5	85	70	105	M6		138	310	280	342	135			25	103	
BN 80	19	40	M6	21.5	6	100	80	120		3	156	346	306	388	146			41	129	
BN 90 S	24	50	M8	27	8	115	95	140	M8		176	409	359	461	149	110	165	39	129	6
BN 90 L															146				160	
BN 100	28	60	M10	31		130	110	160		3.5	195	458	398	521	158			62		
BN 112											219	484	424	547	173			73	199	
BN 132	38	80	M12	41	10	165	130	200	M10	4	258	603	523	686	210	140	188	46	204 (1)	

NOTE:
1) For FD07 brake value R=226.

ES hexagon is not supplied with PS option.

BN_FA - IM B5

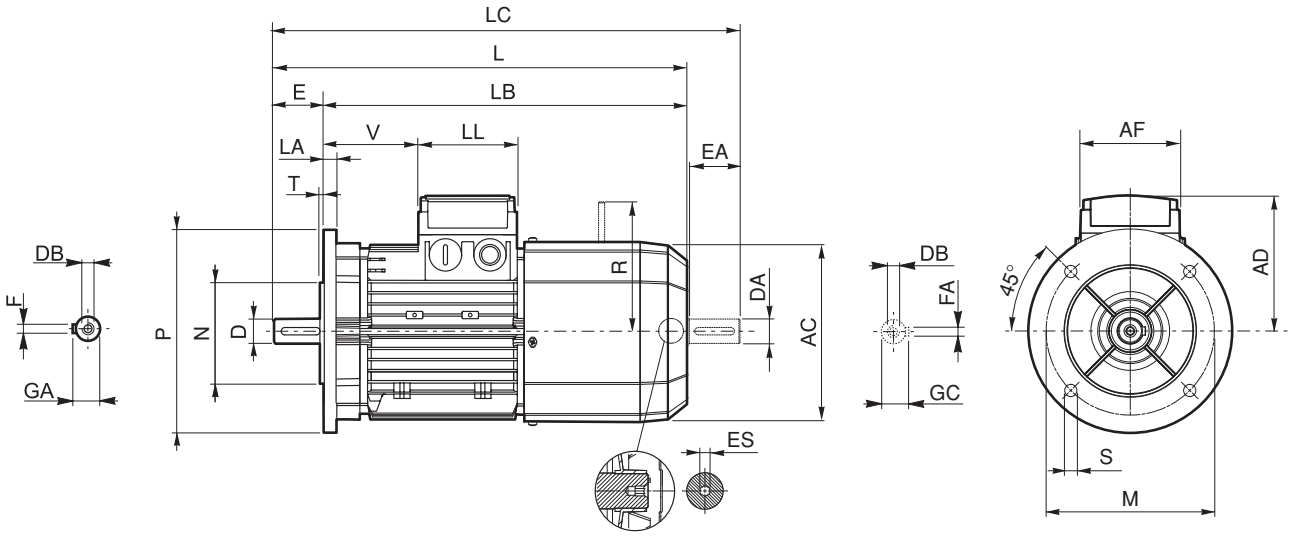

	Shaft					Flange						Motor									
	D DA	E EA	DB	GA GC	F FA	M	N	P	S	T	LA	AC	L	LB	LC	AD	AF	LL	V	R	ES
BN 63	11	23	M4	12.5	4	115	95	140	9.5	3	10	121	272	249	297	95	74	80	26	116	5
BN 71	14	30	M5	16	5	130	110	160		3.5	11.5	138	310	280	342	108			68	124	
BN 80	19	40	M6	21.5	6	165	130	200	11.5			156	346	306	388	119			83	134	
BN 90	24	50	M8	27	8							176	409	359	461	133	98	98	95	160	6
BN 100	28	60	M10	31		215	180	250	14	4	14	195	458	398	521	142			119		
BN 112											15	219	484	424	547	157			128	198	
BN 132	38	80	M12	41	10	265	230	300			20	258	603	523	686	210	140	188	46	200 (2)	
BN 160 MR	42 38 (1)	110 80 (1)	M16 M12 (1)	45 41 (1)	12 10 (1)	300	250	350	18.5	5	15		672	562	755	193	118	118	218	217	
BN 160 M												310	736	626	820	245	187	187	51	247	—
BN 160 L																					
BN 180 M				51.5 41 (1)	14 10 (1)								780	670	864						

NOTE:
1) These values refer to the rear shaft end.
2) Per freno FA07 quota R=217.

Dimensions AD, AF, LL and V, relevant to terminal box of motors BN…FA featuring the separate brake supply (option SA), are coincident with corresponding dimensions of same-size BN…FD and AFD motors

ES hexagon is not supplied with PS option.

BN_FA - IM B14

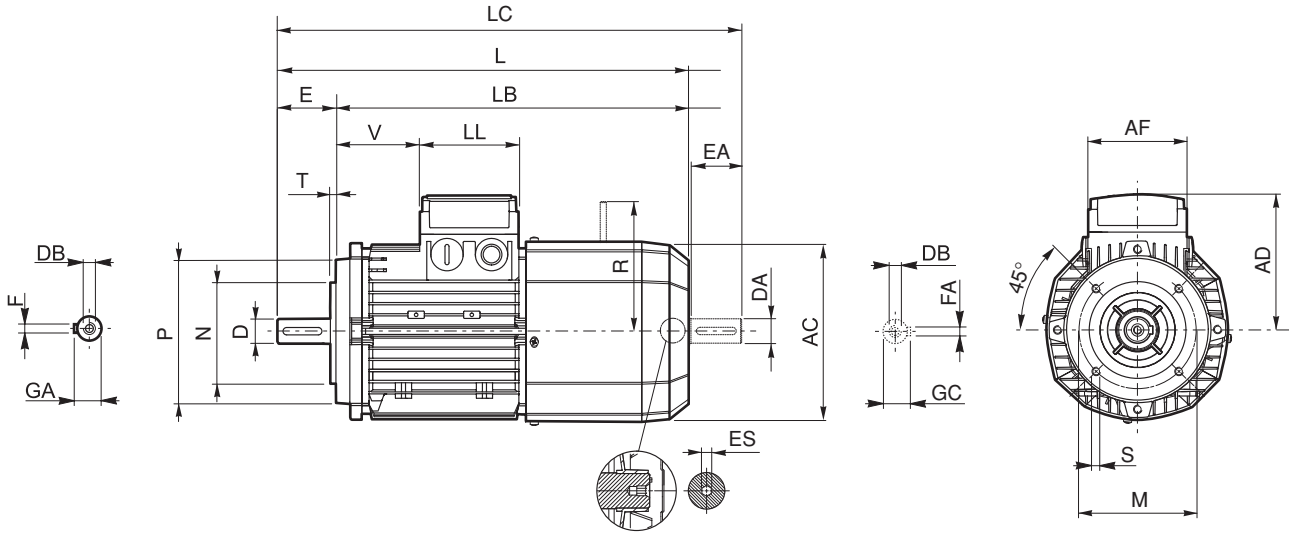

	Shaft					Flange					Motor									
	D DA	E EA	DB	GA GC	F FA	M	N	P	S	T	AC	L	LB	LC	AD	AF	LL	V	R	ES
BN 63	11	23	M4	12.5	4	75	60	90	M5	2.5	121	272	249	119	95	74	80	26	116	5
BN 71	14	30	M5	16	5	85	70	105	M6		138	310	280	342	108			68	124	
BN 80	19	40	M6	21.5	6	100	80	120		3	156	346	306	388	119			83	134	
BN 90	24	50	M8	27	8	115	95	140	M8		176	409	359	461	133	98	98	95	160	6
BN 100	28	60	M10	31		130	110	160		3.5	195	458	398	521	142			119		
BN 112											219	484	424	547	157			128	198	
BN 132	38	80	M12	41	10	165	130	200	M10	4	258	603	523	686	210	140	188	46	200 (1)	

NOTE:
1) For FA07 brake value R=217.

Dimensions AD, AF, LL and V, relevant to terminal box of motors BN…FA featuring the separate brake supply (option SA), are coincident with corresponding dimensions of same-size BN…FD and AFD motors

ES hexagon is not supplied with PS option.

M

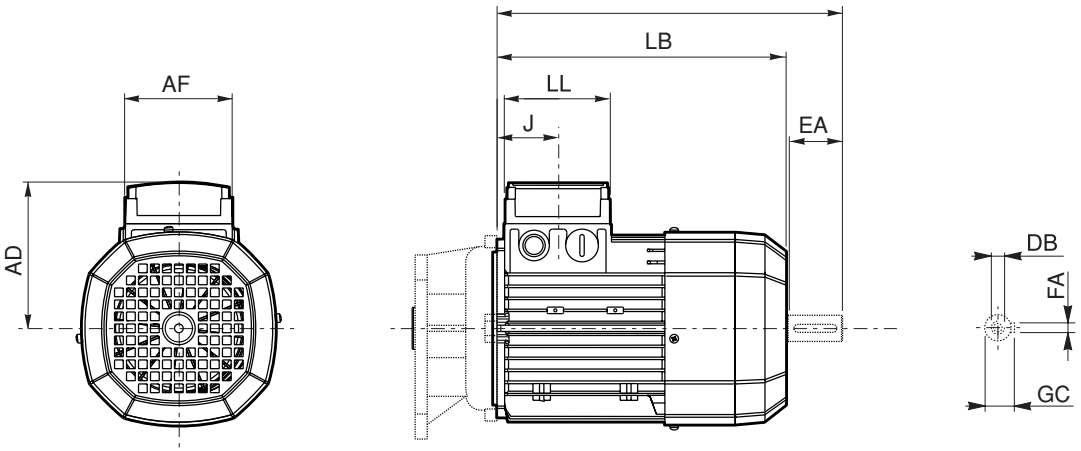

	Rear shaft end					Motor						
	DA	**EA**	**DB**	**FA**	**GC**	**AC**	**LB**	**LC**	**AF**	**LL**	**J**	**AD**
M 0	9	20	M3	3	10.2	110	133	155	74	80	42	91
M 05	11	23	M4	4	12.5	121	165	191			48	95
M 1	14	30	M5	5	16	138	187	219			45	108
M 2 S	19	40	M6	6	21.5	156	202	245			44	119
M 3 S	28	60	M10	8	31	195	230	293	98	98	53.5	142
M 3 L							262	325				
M 4	38	80	M12	10	41	258	361	444	118	118	64.5	193
M 4 LC							396	479				
M 5 S						310	418	502	187	187	77	245
M 5 L							462	546				

M_FD ; M_AFD

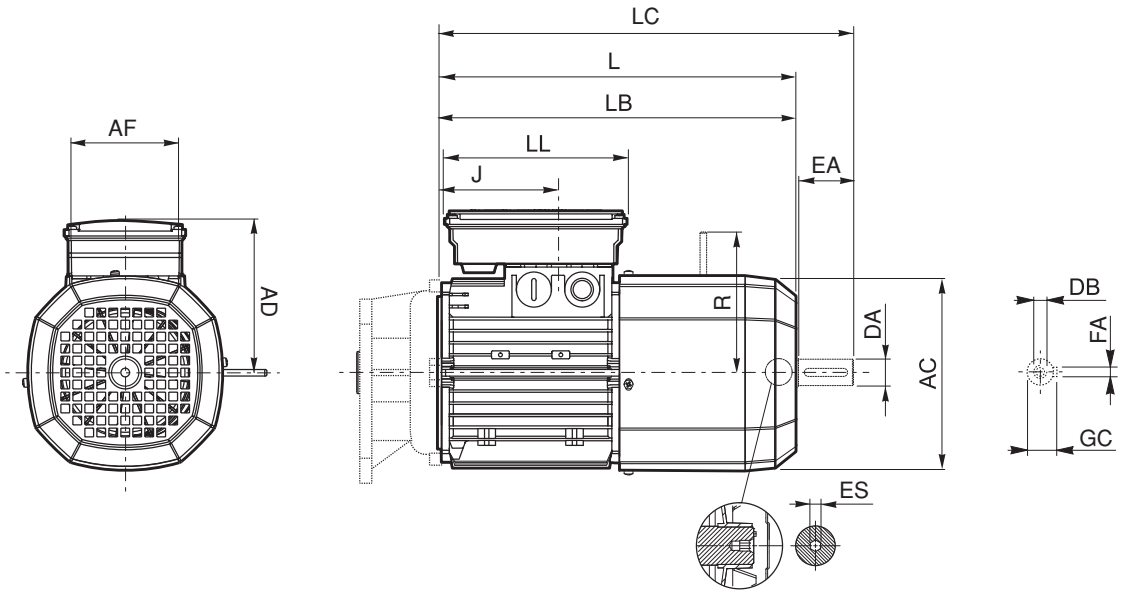

	Rear shaft end					Motor								
	DA	**EA**	**DB**	**FA**	**GC**	**AC**	**LB**	**LC**	**AF**	**LL**	**J**	**AD**	**R**	**ES**
M 05	11	23	M4	4	12.5	121	231	256	98	133	48	122	96	5
M 1	14	30	M5	5	16	138	248	280			73	135	103	
M 2 S	19	40	M6	6	21.5	156	272	314			88	146	129	
M 3 S	28	60	M10	8	31	195	326	389	110	165	124.5	158	160	6
M 3 L							353	416						
M 4	38	80	M12	10	41	258	470	553	140	188	185.5	210	204 (1)	
M 4 LC							495	578			64.5		226	
M 5 S						310	558	642	187	187	77	245	266	—
M 5 L							602	686						

NOTE:
1) For FD07 brake value R=226.

ES hexagon is not supplied with PS option.

M_FA

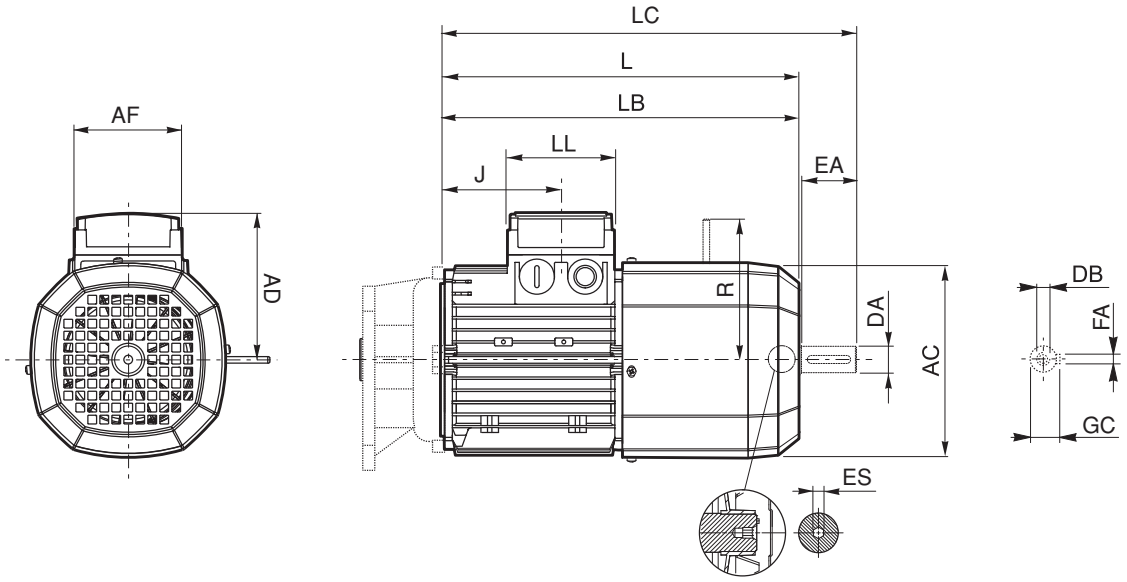

	Rear shaft end					Motor								
	DA	**EA**	**DB**	**FA**	**GC**	**AC**	**LB**	**LC**	**AF**	**LL**	**J**	**AD**	**R**	**ES**
M 05	11	23	M4	4	12.5	121	231	256	74	80	48	95	116	5
M 1	14	30	M5	5	16	138	248	280			73	108	124	
M 2 S	19	40	M6	6	21.5	156	272	314			88	119	134	
M 3 S	28	60	M10	8	31	195	326	389	98	98	124.5	142	160	6
M 3 L							353	416						
M 4	38	80	M14	10	41	258	470	553	140	188	185.5	210	200 (1)	
M 4 LC							495	578			64.5		217	
M 5 S			M12			310	558	642	187	187	77	245	247	—
M 5 L							602	686						

NOTE:
1) For FA07 brake value R=217.

Dimensions AD, AF, LL and V, relevant to terminal box of motors M…FA featuring the separate brake supply (option SA), are coincident with corresponding dimensions of same-size M…FD and AFD motors

ES hexagon is not supplied with PS option.

INDEX OF REVISIONS

BR_CAT_300IND_STD_ENG_R02_0	
	Description
478…492	Added chapter about Atex gearboxes.
494…561	Updated section “Electric motors”.

2015 06 26

This publication supersedes and replaces any previous edition and revision. We reserve the right to implement modifications without notice.
This catalogue cannot be reproduced, even partially, without prior consent.

Bonfiglioli
Forever Forward

Bonfiglioli has been designing and developing innovative and reliable power transmission and control solutions for industry, mobile machinery and renewable energy applications since 1956.

HEADQUARTERS
Bonfiglioli Riduttori S.p.A.
Via Giovanni XXIII, 7/A
40012 Lippo di Calderara di Reno
Bologna (Italy)

tel: +39 051 647 3111
fax: +39 051 647 3126
bonfiglioli@bonfiglioli.com
www.bonfiglioli.com

BR_CAT_300IND_STD_ENG_R02_0